IEEE emerald BOOK™

IEEE

1100™

IEEE Recommended Practice for

Powering and Grounding Electronic Equipment

Published by the
Institute of Electrical and
Electronics Engineers, Inc.

IEEE Std 1100™-2005
(Revision of
IEEE Std 1100-1999)

Recognized as an
American National Standard (ANSI)

IEEE Std 1100™-2005
(Revision of
IEEE Std 1100-1999)

IEEE Recommended Practice for Powering and Grounding Electronic Equipment

Sponsor

Power Systems Engineering Committee
of the
Industrial and Commercial Power Systems Department
of the
IEEE Industry Applications Society

Approved 9 December 2005

IEEE-SA Standards Board

Approved 29 December 2005

American National Standards Institute

Abstract: The *IEEE Emerald Book*™ presents a collection of consensus best practices for the powering and grounding of electronic equipment used in commercial and industrial applications. The main objective is to provide consensus recommended practices in an area where conflicting information and conflicting design philosophies have dominated. The recommended practices described are intended to enhance equipment performance while maintaining a safe installation. A description of the nature and origin of power disturbances is provided, followed by theory on the various parameters that impact power quality. Information on quantifying and resolving power and grounding related concerns using measurement and diagnostic instrumentation and standardized investigative procedures are included. Recommended power protection equipment and wiring and grounding system design practices are presented. Information on telecommunications system power protection as well as grounding, industrial system grounding, and noise control is included. Finally a selection of case studies are presented to support the recommended practices presented throughout the book.
Keywords: commercial applications, electrical power, electronic equipment, grounding, industrial applications, power conditioning, power disturbance, power monitor, power quality

---

The Institute of Electrical and Electronics Engineers, Inc.
3 Park Avenue, New York, NY 10016-5997, USA

Copyright © 2006 by the Institute of Electrical and Electronics Engineers, Inc.
All rights reserved. Published 24 May 2006. Printed in the United States of America.

IEEE is a registered trademark in the U.S. Patent & Trademark Office, owned by the Institute of Electrical and Electronics Engineers, Incorporated.

National Electrical Code and NEC are both registered trademarks of the National Fire Protection Association, Inc.

National Electrical Safety Code and NESC are both registered trademarks and service marks of the Institute of Electrical and Electronics Engineers, Inc.

NEBS is a trademark of Telcordia Technologies, Inc.

Telcordia is a registered trademark of Telcordia Technologies, Inc.

Print: ISBN 0-7381-4979-9 SH95510
PDF: ISBN 0-7381-4978-0 SS95510

No part of this publication may be reproduced in any form, in an electronic retrieval system or otherwise, without the prior written permission of the publisher.

Grateful acknowledgment is made to the following for having granted permission to reprint illustrations in this document, as follows:

American Power Conversion (APC) for Figure 9-14.

BICSI for Figure 9-12, 9-13, and 9-15.

Bourns, Inc., "Selection Guide, Telecom Circuit Protection," 2000, for Figures 9J-1, 9J-2, and 9J-3; "Telecom Circuit Protection Trends," M. J. Maytum, Power Innovations Limited, *Passive Component Industry,* January/ February 2001, vol. 3, no. 1, for Figures 9J-1, 9J-2, 9J-3, 9J-4, 9J-5, 9J-5, 9J-6, and 9J-7. Figures 9J-1 and 9J-2 also appear in IEC 61643-22, edition 1.0, 2004-11.

Cooper Bussmann, Inc., for Figures 9-33 and 9-34.

Emerson Network Power, "Emerson's 2004 Power Seminar Presentations," for Figures 9-26, 9-27, 9-29, 9-30, 9-31, 9D-2, and 9D-8.

EnerNex Corporation for Figure 8-5.

EPRI Solutions Inc.

EquiTech Corporation for Figures 9-75 and 9F-5.

EYP Mission Critical Facilities, Inc., for Figures 4-1, 4-2, 4-3- 4-4, 4-23, 4-24, 4-25, 4-26, 4-28, 4-29, 4-30, 4-31, 4-34, 4-35, 4-36, 4-37, 4-48- 4-49, 4-50, 4-53, 4-54, and 4-71.

Liebert Corporation for Figures 7-6, 7-7, 7-8, 7-9, 7-10, 7-11, 7-13, 7-16, 7-17, 7-19, 7-20, 7-21, 7-22, 7-24, 7-25, 7-26, 7-27, 7-28, 7-29, 7-30, 7-31, 9-21, 9-22, 9-24, 9H-1, and 9H-2.

D. R. MacGorman, M. W. Maier, and W. D. Rust, "Lightning Strike Density for the Contiguous United States from Thunderstorm Duration Records," for Figure 3-3.

A. McEachern, *Handbook of Power Signatures,* for Figure 4-42.

National Electrical Manufacturers Association for Table 4-1.

Nortel Networks (with clarity edit made by William Bush, SPGS, Inc.) for Figure 9-59.

Protection Technologies, Inc., for Figures 9F-1 and 9F-2.

Rockwell Automation, Inc., for Figures 9-13 and 9-15.

Schneider Electric SA/Square D for Figures 10-1, 10-2, 10-3, 10-4, 10-8, 10-17, 10-18, 10-19, 10-20, and 10-21; Table 10-1.

SEMI (Semiconductor Equipment and Materials International, Inc.), SEMI F47-0200, "Specification for Semiconductor Processing Equipment Voltage Sag Immunity," February 2000, for Figure 3-13.

Signals, Power & Grounding Specialists, Inc. (SPGS).

Skyline Marketing Group for Figures 9D-3, 9D-4, 9D-5, and 9D-6.

Ronald B. Standler, *Protection of Electronic Circuits from Overvoltages,* for Figure 4-14.

The Dranetz Field Handbook for Power Quality Analysis for Figures 2-1, 4-40, 4-41, A-1, A-2, and A-3.

Vaisala Inc. for Figure 3-4.

IEEE Standards documents are developed within the IEEE Societies and the Standards Coordinating Committees of the IEEE Standards Association (IEEE-SA) Standards Board. The IEEE develops its standards through a consensus development process, approved by the American National Standards Institute, which brings together volunteers representing varied viewpoints and interests to achieve the final product. Volunteers are not necessarily members of the Institute and serve without compensation. While the IEEE administers the process and establishes rules to promote fairness in the consensus development process, the IEEE does not independently evaluate, test, or verify the accuracy of any of the information contained in its standards.

Use of an IEEE Standard is wholly voluntary. The IEEE disclaims liability for any personal injury, property or other damage, of any nature whatsoever, whether special, indirect, consequential, or compensatory, directly or indirectly resulting from the publication, use of, or reliance upon this, or any other IEEE Standard document.

The IEEE does not warrant or represent the accuracy or content of the material contained herein, and expressly disclaims any express or implied warranty, including any implied warranty of merchantability or fitness for a specific purpose, or that the use of the material contained herein is free from patent infringement. IEEE Standards documents are supplied "**AS IS**."

The existence of an IEEE Standard does not imply that there are no other ways to produce, test, measure, purchase, market, or provide other goods and services related to the scope of the IEEE Standard. Furthermore, the viewpoint expressed at the time a standard is approved and issued is subject to change brought about through developments in the state of the art and comments received from users of the standard. Every IEEE Standard is subjected to review at least every five years for revision or reaffirmation. When a document is more than five years old and has not been reaffirmed, it is reasonable to conclude that its contents, although still of some value, do not wholly reflect the present state of the art. Users are cautioned to check to determine that they have the latest edition of any IEEE Standard.

In publishing and making this document available, the IEEE is not suggesting or rendering professional or other services for, or on behalf of, any person or entity. Nor is the IEEE undertaking to perform any duty owed by any other person or entity to another. Any person utilizing this, and any other IEEE Standards document, should rely upon the advice of a competent professional in determining the exercise of reasonable care in any given circumstances.

Interpretations: Occasionally questions may arise regarding the meaning of portions of standards as they relate to specific applications. When the need for interpretations is brought to the attention of IEEE, the Institute will initiate action to prepare appropriate responses. Since IEEE Standards represent a consensus of concerned interests, it is important to ensure that any interpretation has also received the concurrence of a balance of interests. For this reason, IEEE and the members of its societies and Standards Coordinating Committees are not able to provide an instant response to interpretation requests except in those cases where the matter has previously received formal consideration. At lectures, symposia, seminars, or educational courses, an individual presenting information on IEEE standards shall make it clear that his or her views should be considered the personal views of that individual rather than the formal position, explanation, or interpretation of the IEEE.

Comments for revision of IEEE Standards are welcome from any interested party, regardless of membership affiliation with IEEE. Suggestions for changes in documents should be in the form of a proposed change of text, together with appropriate supporting comments. Comments on standards and requests for interpretations should be addressed to:

Secretary, IEEE-SA Standards Board
445 Hoes Lane
Piscataway, NJ 08854
USA

NOTE—Attention is called to the possibility that implementation of this standard may require use of subject matter covered by patent rights. By publication of this standard, no position is taken with respect to the existence or validity of any patent rights in connection therewith. The IEEE shall not be responsible for identifying patents for which a license may be required by an IEEE standard or for conducting inquiries into the legal validity or scope of those patents that are brought to its attention.

Authorization to photocopy portions of any individual standard for internal or personal use is granted by the Institute of Electrical and Electronics Engineers, Inc., provided that the appropriate fee is paid to Copyright Clearance Center. To arrange for payment of licensing fee, please contact Copyright Clearance Center, Customer Service, 222 Rosewood Drive, Danvers, MA 01923 USA; +1 978 750 8400. Permission to photocopy portions of any individual standard for educational classroom use can also be obtained through the Copyright Clearance Center.

Introduction

(This introduction is not part of IEEE Std 1100-2005, IEEE Recommended Practice for Powering and Grounding Electronic Equipment.)

This recommended practice is a publication of the Industry Applications Society (IAS) of the IEEE and is one of the *IEEE Color Books*®, which relate to industrial and commercial power systems. The recommended practices described are intended to enhance equipment performance from an electric powering and grounding standpoint, while maintaining a safe installation as prescribed by national and local electric code requirements. The purpose of this recommended practice is to provide consensus recommended practices in an area where conflicting information and conflicting design philosophies have dominated.

As the proliferation of digital electronic equipment continues to change the way society utilizes and relies on electric power continuity, the need for standardized practices for power protection and grounding continues to grow. The requirements of the digital society have essentially outgrown the capabilities of the present day electric power supply, and the need for practices that promote system compatibility of both the electric supply and the connected equipment is important from the largest industrial facilities all the way down to home offices. The concept of system compatibility, which is covered extensively in this book, describes the mechanisms of interaction and requirements necessary to ensure that not only does the electrical power equipment connected to its power source operate properly even during moderate power fluctuations, but also that same equipment does not interfere with other equipment connected to the common power system. The responsibility for system compatibility is shared among all parties, including the electric suppliers, the equipment manufacturers, the building designers, the power conditioning equipment manufacturers, and the facility equipment specifiers, and this document supplies methods to ensure that when a system compatibility problem is present, there are adequate means of investigating and resolving the concern. It is also the intent of this document to supply power system design guidelines and recommended practices that would minimize the potential for a system compatibility concern to occur.

To address the topics detailed in the *IEEE Emerald Book*™, the IEEE Working Group on Powering and Grounding Electronic Equipment was originally formed in 1986 to write a recommended practice. The first *IEEE Emerald Book*™ was subsequently published in 1992, followed by a revision in 1999. The project was sponsored by the IAS Industrial and Commercial Power Systems Engineering Subcommittee. This recommended practice is intended to complement other recommended practices in the *IEEE Color Books*® and has been coordinated with other related codes and standards.

Notice to users

Errata

Errata, if any, for this and all other standards can be accessed at the following URL: http://standards.ieee.org/reading/ieee/updates/errata/index.html. Users are encouraged to check this URL for errata periodically.

Interpretations

Current interpretations can be accessed at the following URL: http://standards.ieee.org/reading/ieee/interp/index.html.

Copyright © 2006 IEEE. All rights reserved.

Patents

Attention is called to the possibility that implementation of this standard may require use of subject matter covered by patent rights. By publication of this standard, no position is taken with respect to the existence or validity of any patent rights in connection therewith. The IEEE shall not be responsible for identifying patents or patent applications for which a license may be required to implement an IEEE standard or for conducting inquiries into the legal validity or scope of those patents that are brought to its attention.

Participants

The following persons contributed to the revision of IEEE Recommended Practice for Powering and Grounding Electronic Equipment:

Douglas S. Dorr, *Chair*
Christopher J. Melhorn, *Secretary*
Zade Shaw, Kate Langley, *Editors*

Chapter 1: Overview—**Douglas S. Dorr,** *Chair*

Chapter 2: Definitions—**Carl E. Becker,** *Previous Chair*

Chapter 3: General needs guidelines—**Christopher J. Melhorn,** *Chair*

Chapter 4: Fundamentals—**Robert J. Schuerger,** *Chair*

Chapter 5: Instrumentation—**Douglas S. Dorr,** *Previous Chair*

Chapter 6: Site surveys and power analysis—**Kenneth M. Michaels,** *Previous Chair*

Chapter 7: Specifications and selection of equipment and materials—**Thomas M. Gruzs,** *Chair*

Chapter 8: Recommended design and installation practices—**Michael Butkiewicz,** *Previous Chair*

Chapter 9: Telecommunications and distributed computing—**William Bush,** *Chair*

Chapter 10: Industrial systems—**Van E. Wagner,** *Chair*

Chapter 11: Case histories—**Mark Waller,** *Chair*

Vladimir F. Basch
J. Allen Byrne
David Chau
Jonathan Clough
Thomas G. Croda
Paul Dobrowski
Ernest M. Duckworth Jr.
Addam Fiedl
Joaquin Fuster
Lawrence Guzy
James R. Harvey
Michael C. Keeling
Thomas S. Key
William Kimmel
Nicholas Korbel
Don Koval
Robert Kretschmann
Curtis Leary
J. M. Liptak
Phillip Lim
Robert Lounsbury
Mike Lowenstein
Carl Miller
Ralph Morrison
William J. Moylan
Charles Perry III
Bill Petersen
Elliott Rappaport
Melvin Sanders
Lynn F. Saunders
Tom Schaunessy
Michael Simon
Sonny Siu
Douglas C. Smith
Devendra Soni
Paul Spain
Mark Stephens
Nicholas Tullius
S. F. Waterer
Baskar Vairamohen
Christopher Weathers
George Zeigler

Copyright © 2006 IEEE. All rights reserved.

Since the initial publication, many IEEE standards have added functionality or provided updates to material included in this recommended practice. The following is a historical list of participants who have dedicated their valuable time, energy, and knowledge to the creation of this material:

Past Emerald Book Chairs—**Thomas S. Key** (1992) and **Thomas M. Gruzs** (1999)

Past Emerald Book Secretaries—**Warren H. Lewis, Christopher J. Melhorn, Van E. Wagner**

*Editor*s—**Bradford Connatser, Nanette Jones, Michael C. Keeling, Kate Langley, François Martzloff, Zade Shaw**

Past Chapter Chairs—**Vladimir F. Basch, Carl E. Becker, William Bush, Michael Butkiewicz, Edward G. Cantwell, Jane M. Clemmensen, Douglas S. Dorr, Thomas M. Gruzs, J. Frederick Kalbach, Michael C. Keeling, Thomas S. Key, Warren H. Lewis, François Martzloff, Kenneth M. Michaels, Raymond M. Waggoner, Donald W. Zipse**

Former Working Group members and contributors:

Math Bollen
James A. Canham
Wendall Carter
John E. Curlett
John B. Dagenhart
John G. Dalton
Dennis Darling
Robert J. Deaton
Michael J. Demartini
William E. Dewitt
Thomas W. Dilliberti
Francis J. Fiederlein
Norman Fowler
Jeff Franklin
Arthur Freund
David A. Fuhrman
Phillip E. Gannon
David C. Griffith
Joseph Groesch
Joseph J. Humphrey
J. Frederick Kalbach
Kenneth B. Keels
Robert Keis
Prem Khera
Don. O. Koval
Emanuel E. Landsman
Ralph H. Lee
Alexander McEachern
William A. Moncrief
Allen Morinec
Eduard Mulhadi
Richard L. Nailen
Hugh O. Nash
Raymond Nerenberg
Pat O'Donnell
Steve Pierre
Percy E. Poole
Tom Poole
Charles D. Potts
Marek J. Samotyj
Richard E. Singer
Murray Slater
William M. Smith
Anthony W. St. John
Meil Thorla
Clarence P. Tsung
Timothy D. Unruh
David B. Vannoy
John J. Waterman

The following members of the individual balloting committee voted on this recommended practice. Balloters may have voted for approval, disapproval, or abstention.

David Aho
Jacob Ben Ary
David Baron
Thomas Blair
William Bloethe
Stuart Bouchey
Kenneth Bow
Richard Brown
William Brumsickle
Reuben Burch
Ted Burse
William Bush
Keith Chow
Bryan Cole
Larry Coleman
Joseph S. Collura
Tommy Cooper
Randall Groves
Thomas M. Gruzs
Erich Gunther
George Gurlaskie
Larry Guzy
Ajit Gwal
Paul Hamer
Dennis Hansen
James R. Harvey
Gilbert Hensley
Steven Hensley
Ajit Hiranandani
Robert Hoerauf
Edward Horgan Jr.
Dennis Horwitz
Darin Hucul
Robert Ingham
Gary Michel
William A. Moncrief
Charles Morse
Abdul Mousa
William J. Moylan
Michael Newman
Rick O'Keefe
Gregory Olson
Thomas Ortmeyer
Lorraine Padden
Gary Peele
Elliot Rappaport
Larry Ray
Radhakrishna Rebbapragada
Johannes Rickmann
Michael Roberts

Copyright © 2006 IEEE. All rights reserved.

William Curry
Stephen Dare
R. Daubert
Andrew Dettloff
Gary Di Troia
Doug Dorr
Neal Dowling
Mark Drabkin
Donald Dunn
Gary Engmann
Clifford C. Erven
Dan Evans
Jay Fischer
Rabiz Foda
Carl Fredericks
James Funke
Edgar Galyon
William Goldbach
Manuel Gonzalez
David W. Jackson
Joseph Jancauskas
Mark Kempker
Yuri Khersonsky
Joseph L. Koepfinger
Don Koval
Edwin Kramer
Jason Lin
Al Maguire
William Majeski
Keith Malmedal
Jesus Martinez
Stephen McCluer
William McCoy
Mark McGranaghan
Nigel McQuin
Chris Melhorn
Bryan Melville
James Michalec
Thomas Rozek
Daniel Sabin
Bob Saint
Melvin Sanders
Steven Sano
Robert Schuerger
H. Jin Sim
Michael Simon
David Singleton
Devendra Soni
Timothy Unruh
Raul Velazquez
Hemant Vora
Van Wagner
Daniel Ward
Steven Whisenant
James Wikston
James Wilson
Ahmed Zobaa

The final conditions for approval of this standard were met on 9 December 2005. This standard was conditionally approved by the IEEE-SA Standards Board on 22 September 2005, with the following membership:

Steve M. Mills, *Chair*
Richard H. Hulett, *Vice Chair*
Don Wright, *Past Chair*
Judith Gorman, *Secretary*

Mark D. Bowman
Dennis B. Brophy
Joseph Bruder
Richard Cox
Bob Davis
Julian Forster*
Joanna N. Guenin
Mark S. Halpin
Raymond Hapeman
William B. Hopf
Lowell G. Johnson
Herman Koch
Joseph L. Koepfinger*
David J. Law
Daleep C. Mohla
Paul Nikolich
T. W. Olsen
Glenn Parsons
Ronald C. Petersen
Gary S. Robinson
Frank Stone
Malcolm V. Thaden
Richard L. Townsend
Joe D. Watson
Howard L. Wolfman

*Member Emeritus

Also included are the following nonvoting IEEE-SA Standards Board liaisons:

Satish K. Aggarwal, *NRC Representative*
Richard DeBlasio, *DOE Representative*
Alan H. Cookson, *NIST Representative*

Don Messina
IEEE Standards Project Editor

Copyright © 2006 IEEE. All rights reserved.

Contents

Chapter 1
Overview 1
1.1 Scope 1
1.2 Purpose 1
1.3 Background 1
1.4 Text organization 2
1.5 Bibliography 4

Chapter 2
Definitions 5
2.1 Introduction 5
2.2 Alphabetical listing of terms 5
2.3 Words avoided 13
2.4 Acronyms and abbreviations 14
2.5 Normative references 18
2.6 Bibliography 19

Chapter 3
General needs guidelines 21
3.1 Introduction 21
3.2 Power quality considerations 23
3.3 Grounding considerations 33
3.4 Protection of susceptible equipment 38
3.5 Information technology equipment (ITE) 40
3.6 Shielded, filtered, enclosed EMI/EMC areas 46
3.7 Safety systems 47
3.8 Coordination with other codes, standards, and agencies 48
3.9 Normative references 50
3.10 Bibliography 51

Chapter 4
Fundamentals 53
4.1 Introduction 53
4.2 Electric power supplier's distribution system voltage disturbances 54
4.3 Voltage disturbances—subtractive 56
4.4 Voltage surges and interference—Additive 63
4.5 Steady-state voltage/current wave shape distortion 81
4.6 High- and low-frequency regimes defined 98
4.7 Impedance considerations 103
4.8 Grounding subsystems 121
4.9 Shielding concepts 150
4.10 Surge protective devices 154
4.11 Normative references 158
4.12 Bibliography 158

Chapter 5
Instrumentation 163
5.1 Introduction 163
5.2 Range of available instrumentation 163
5.3 Voltage and current measurements 163
5.4 Descriptions of site survey tools 169

Copyright © 2006 IEEE. All rights reserved.

5.5 Measurement considerations ... 176
5.6 Normative references ... 179
5.7 Bibliography ... 179

Chapter 6
Site surveys and site power analyses ... 181
6.1 Introduction ... 181
6.2 Objectives and approaches ... 181
6.3 Coordinating involved parties ... 182
6.4 Conducting a site survey ... 183
6.5 Harmonic current and voltage measurements ... 201
6.6 Applying data to select cost-effective solutions ... 202
6.7 Long-term power monitoring ... 203
6.8 Conclusions ... 203
6.9 Normative references ... 204
6.10 Bibliography ... 205

Chapter 7
Specification and selection of equipment and materials ... 207
7.1 Introduction ... 207
7.2 Commonly used power correction devices ... 207
7.3 Equipment specifications ... 236
7.4 Procurement specifications ... 243
7.5 Verification testing ... 246
7.6 Equipment maintenance ... 248
7.7 Bibliography ... 250

Chapter 8
Recommended design/installation practices ... 253
8.1 Introduction ... 253
8.2 Equipment room wiring and grounding ... 254
8.3 Electrical power system selection considerations ... 255
8.4 Equipment selection and installation considerations ... 262
8.5 Grounding considerations ... 279
8.6 Lightning/surge protection considerations ... 300
8.7 380 Hz to 480 Hz systems ... 304
8.8 Normative references ... 307
8.9 Bibliography ... 308

Chapter 9
Telecommunications, information technology, and distributed computing ... 311
9.1 Introduction ... 311
9.2 Vulnerability concerns vs. immunity ... 314
9.3 Environmental exposure ... 316
9.4 Industry guidelines ... 316
9.5 General compliance ... 316
9.6 Principles for establishing recommended practices ... 318
9.7 General considerations ... 320
9.8 Powering ... 321
9.9 Grounding and bonding ... 370
9.10 Evaluations and audits ... 421
9.11 Normative references ... 423
9.12 Bibliography ... 424

Copyright © 2006 IEEE. All rights reserved.

Annex 9A (normative) General 426
Annex 9B (normative) Nomenclature 436
Annex 9C (informative) List of telecommunications-related industry guidelines 439
Annex 9D (informative) Trends and changing responsibilities 469
Annex 9E (informative) Background on telecommunications 475
Annex 9F (normative) Industry-described telecommunications surge environment 480
Annex 9G (informative) Impact of technology convergence on ac and dc powering 496
Annex 9H (informative) Factors in selecting large-scale ac and dc power 498
Annex 9I (informative) Highlights of ANSI T1.311 requirements for dc power systems 504
Annex 9J (informative) Understanding telecommunications circuit protection 506
Annex 9K (normative) Fundamental concepts on surge protection 514
Annex 9L (informative) Additional information on surge protection 519

Chapter 10
Industrial systems 529
10.1 Introduction 529
10.2 Basic noise control theory 529
10.3 Method of analysis 536
10.4 Recommended practices 537
10.5 Distance, long power cable runs 559
10.6 Bibliography 559

Chapter 11
Case histories 561
11.1 Introduction 561
11.2 Typical utility-sourced power quality problems 561
11.3 Premises switching generated surges 563
11.4 Electronic loads 564
11.5 Premises-wiring-related problems 566
11.6 Transient voltage surge suppression network design—primary and secondary network design572
11.7 Typical radiated EMI problems 573
11.8 Flicker 574
11.9 Typical electrical inspection problems 574
11.10 Typical life-safety system problems 575
11.11 Typical misapplication of equipment problems 576
11.12 Normative references 576
11.13 Bibliography 576

Index 577

Copyright © 2006 IEEE. All rights reserved.

IEEE Recommended Practice for Powering and Grounding Electronic Equipment

Chapter 1
Overview

1.1 Scope

This document presents recommended design, installation, and maintenance practices for electrical power and grounding (including both safety and noise control) and protection of electronic loads such as industrial controllers, computers, and other information technology equipment (ITE) used in commercial and industrial applications.

1.2 Purpose

The main objective is to provide a consensus of recommended practices in an area where conflicting information and confusion, stemming primarily from different viewpoints of the same problem, have dominated. Practices herein address electronic equipment electrical performance and protection issues while maintaining a safe installation, as specified in the National Electrical Code® (NEC®) (NFPA 70, 2005 Edition) [B1][1] and recognized testing laboratories' standards. This recommended practice is not intended to replace or to take precedence over any codes or standards adopted by the jurisdiction where the installation resides.

1.3 Background

As electronic loads and ITE proliferate in industrial and commercial power systems, so do problems related to power quality. Powering and grounding electronic equipment continues to be a growing concern for commercial and industrial power system designers. This concern frequently materializes after start-up, when electronic system operating problems begin to occur. Efforts to alleviate these problems have ranged from installing power conditioning equipment to applying special grounding techniques that are not found in conventional safe grounding practice. In some cases this approach has led to unsafe practices and violations of the NEC, without solving operating problems. Many times even after installing power conditioning devices, the protected equipment still fails or does not operate as expected during thunderstorms and power outages. In response to this situation, this recommended practice attempts to provide an understanding of the fundamentals of proper powering and grounding for facilities and electronic equipment as well as examples of the various problems that can arise.

The concept of load and source compatibility is not new. The need to provide power with steady voltage and frequency has been recognized since the inception of the electric utility industry. Some of the early concerns were flicker of light bulbs due to voltage fluctuations and overheating of motors due to voltage waveform distortion (harmonics). Recognition of these problems led to the development of voluntary standards that contributed significantly to reductions in occurrences.

More recently, transient voltage disturbances associated with lightning and power system switching have emerged as a major concern to manufacturers and users of electronic equipment. The issue of grounding,

[1]The numbers in brackets correspond to those of the bibliography in 1.5.

Copyright © 2006 IEEE. All rights reserved.

and particularly how to deal with lightning protection, noise, and safety simultaneously, is complicated by conflicting philosophies advocated by people of different backgrounds. Power-oriented engineers and signal-oriented engineers often differ in their perception of the problem and potential solutions.

Complaints about the quality of power today are not easily resolved because they involve both a multitude of different causes and a variety of specific sensitivities in the affected equipment. A commonly applied solution to power incompatibilities is to install interface equipment such as power conditioners between commercial power and sensitive loads. Difficulties in assessing the need to apply power interface equipment include the following:

a) The inability to quantify precisely how much downtime is power related

b) The subjective nature of estimating the cost of sensitive load misoperation that is attributable to power line disturbances

c) A reluctance of end users to spend money on equipment they feel is not their responsibility to have to provide when they are already paying for the commercial electric power and for the electronic equipment that is being affected

The cost/benefit aspects of the problem can be addressed from a technical point of view in standards, but detailed economic analysis and specific decisions remain the prerogative of the user. Power system designers, utility companies, and manufacturers of electronic equipment need to cooperate with each other to find effective solutions to reduce the potential sources of interference, reduce the susceptibility of the load equipment, or apply power conditioning equipment.

As in the past, voluntary consensus standards are also needed. Focusing on the technical issues, dispelling misconceptions, and recommending sound practices can assist the user in making informed economic decisions. Two of the goals of this recommended practice are to promote a better understanding of the significant issues and to dispel misconceptions.

Fortunately, powering and grounding an electronic system is fundamentally the same as any electrical system. Estimating the load, matching current and voltage requirements, or planning for future growth involves the same basic information. Similarly, designing an appropriate electrical distribution system, selecting and coordinating overcurrent protection, and assuring voltage regulation makes use of the same engineering practices. Even the principles of grounding for safety can be applied to electronic loads in the same way as to any other load.

The *IEEE Color Books*® are an excellent reference library available for designing commercial and industrial power systems of all types. Each *IEEE Color Book*™ provides recommended practices in a specific subject area. The objective is to assist in the design of safe, reliable, and economical electric power systems by providing the consensus of knowledge and experience of the contributing IEEE members. The *IEEE Emerald Book*™ is directed specifically at powering and grounding electronic equipment.

1.4 Text organization

The following chapter descriptions provide the reader with a road map of this recommended practice:

Chapter 2 provides definitions of the terms that pertain to power quality issues and that are generally not otherwise available in IEEE standards. A description and a definition of power disturbances is included. Also provided in Chapter 2 is a list of terms that have been deliberately avoided in this recommended practice because they have several different meanings and no generally accepted single technical definition.

Chapter 3 provides general needs guidelines. This chapter is intended to identify the relevant codes and standards, as well as to define the existing electrical environments to which equipment is typically subjected.

 Copyright © 2006 IEEE. All rights reserved.

These guidelines are established as a basis for the treatment of instrumentation, site surveys, selection of equipment, and recommended practices in subsequent chapters.

Chapter 4 introduces the reader to the fundamental concepts necessary for understanding and applying recommended practices for the design of a compatible and essentially hazard-free interconnection to the power system. Fundamentals not unique to electronic and electrical equipment are treated lightly, or by reference to other standards.

Chapter 5 presents information on available measurement equipment useful for investigating and diagnosing problems in power systems that serve electronic equipment. Emphasis is on the use of instrumentation that will measure, record, and report power quality related voltage and current fluctuations without error.

Chapter 6 covers site power analyses and site surveys. This chapter presents the fundamentals of how to conduct a site survey for problem identification and diagnosis. The recommended approach presented suggests getting a clear understanding of the problem and defining all of the survey objectives before starting the audit. Once the key objectives are defined, the approach typically begins with wiring and grounding checks and progresses through voltage disturbance measurements to harmonic analysis as appropriate vs. the survey objectives.

Chapter 7 presents the myriad of available power conditioning equipment from the points of view of basic technology, performance, and function. Specification, performance verification, and maintenance are also covered. The equipment detailed ranges from large scale megawatt sized "whole facility" power conditioners, to small (less that 100 W) process control "device level" power conditioners.

Chapter 8 covers the recommended design and installation practices for powering and grounding electronic equipment. The intent is to present the Working Group's collective engineering experience and judgment of effective practices.

Chapter 9 provides recommendations for powering and grounding telecommunications, information technology, and distributed computing systems (including Internet equipment) in commercial and industrial locations. This chapter was a new addition to IEEE Std 1100-1999 and has been considerably expanded in this latest revision. Recommendations are provided for the building's grounding and bonding infrastructure for telecommunications; grounding and bonding of electrical and electromagnetic protection devices and apparatus; shielded cabling; premises outside plant telecommunications facilities; and premises tower structures. Recommendations are given for auditing the location for proper powering and grounding of telecommunications. The chapter makes extensive use of existing industry standards, such as ANSI T1 standards, and industry specifications, such as those by Telcordia and BICSI.

Chapter 10 is a new addition to the *IEEE Emerald Book*™. This chapter describes the grounding and wiring methods to minimize the impact of noise on industrial control systems. It is the intent of the chapter to provide a basic understanding of the principles and recommended practices for the most useful noise prevention techniques. The primary audience for this chapter is the panel builder. The panel builder uses components like programmable logic controllers, servos, sensors, and drives to control a steel rolling mill, a cookie oven, or an amusement park ride. They combine different equipment from many manufacturers often in a one-of-a-kind system. Consequently, the possibly of interference problems is high if proper techniques are not followed.

Chapter 11 presents case histories. These case studies provide examples of real-world performance and safety problems that have been encountered in the field. Cases that are presented have been selected to support the material presented throughout the *IEEE Emerald Book*™ and to encompass the various power quality concerns, including wiring and grounding related issues, surge protective device (SPD) application, voltage sag concerns, harmonics, transients, use of power quality monitors, and other topics of interest. The case studies illustrate the need to follow specific recommended practices and detail specific problems that can be encountered when recommended practices are not followed.

Copyright © 2006 IEEE. All rights reserved.

1.5 Bibliography

Additional information may be found in the following source:

[B1] NFPA 70, 2005 Edition, National Electrical Code® (NEC®).[2]

[2]The NEC is published by the National Fire Protection Association, Batterymarch Park, Quincy, MA 02269, USA (http://www.nfpa.org). Copies are also available from the Institute of Electrical and Electronics Engineers, Inc., 445 Hoes Lane, Piscataway, NJ 08854, USA (http://standards.ieee.org/).

 Copyright © 2006 IEEE. All rights reserved.

Chapter 2
Definitions

2.1 Introduction

The electronic power community is pervaded by terms that have no scientific definition. One of the purposes of this chapter is to eliminate the use of those words. Another purpose is to define those terms that aid in the understanding of concepts within this recommended practice.

This chapter is divided into three parts. First, an alphabetical listing of definitions is provided in 2.2. These definitions were obtained from appropriate sources or are new definitions that convey a common understanding for the word as used in the context of this recommended practice. The reader is referred to *The Authoritative Dictionary of IEEE Standards Terms* [B1][1] for all terms not listed herein. The second part (2.3) lists those terms that have been deliberately avoided in this document because of no generally accepted single technical definition. These words find common use in discussing distribution-related power problems, but tend not to convey significant technical meaning. The third part (2.4) lists acronyms and abbreviations that are employed throughout this recommended practice.

2.2 Alphabetical listing of terms

For purposes of this recommended practice, the following terms and definitions apply. *The Authoritative Dictionary* should be referenced for terms not defined in this subclause. This subclause does not include any device or equipment definitions (e.g., *isolation transformers* and *uninterruptible power systems*); the reader is advised to refer to the Index. Most pertinent equipment is described in Chapter 7.

2.2.1 battery return conductor: A conductor that carries dc return current between a dc power source and the loads it serves. Battery return conductors are grounded conductors, usually bonded by one (or more) dc system grounding conductor(s) to proper point(s) of the grounding system. They are usually designated BR or an equivalent acronym, but are sometimes designated by using a "+" or "–" followed by the nominal system voltage (e.g., +48, –130, etc.).

2.2.2 bonding: (A) The electrical interconnecting of conductive parts, designed to maintain a common electrical potential. [National Electrical Code (NEC®) (NFPA 70, 2005 Edition)[2]] **(B)** The permanent joining of metallic parts to form an electrically conductive path that will assure electrical continuity and the capacity to conduct safely any current likely to be imposed. (NEC)

2.2.3 bonding network, common (CBN): (A) The principal means for affecting bonding and earthing inside a building. **(B)** The set of metallic components that are intentionally or incidentally interconnected to form the (earthed) bonding network (a mesh) in a building. These components include structural steel or reinforcing rods, metallic plumbing, ac power conduit, equipment grounding conductors (EGCs), cable racks, and bonding conductors. The CBN always has a mesh topology and is connected to a grounding electrode system via one or more grounding conductors.

2.2.4 bonding network, isolated (IBN): (A) A bonding network that has a single-point connection (single-point ground) to either the CBN or another isolated bonding network. **(B)** Typically a system-level grounding topology used by the original equipment manufacturer (OEM) to desensitize its equipment to suspected or known site environmental issues such as power fault and surge, lightning, and grounding potential rise. The IBN requires the use of a single-point connection window (SPCW) (also known in the telephone industry as a *ground window*) to interface the rest of the building metallics (the CBN).

[1]The numbers in brackets correspond to those of the bibliography in 2.6.
[2] Information on references can be found in 2.5.

Copyright © 2006 IEEE. All rights reserved.

NOTE—The IBN should not be confused with the insulated grounding receptacle (IGR) circuit discussed in Article 250 of the NEC.[3]

2.2.5 commercial power: Power furnished by an electric power utility company.

2.2.6 common bonding network: *See:* **bonding network, common.**

2.2.7 common-mode noise (longitudinal): The noise voltage that appears equally, and in phase, from each current-carrying conductor to ground.

NOTE—For the purposes of this recommended practice, this abbreviated definition extends the existing definition in *The Authoritative Dictionary* (previously given only for signal cables) to the power conductors supplying electronic equipment.

2.2.8 coupling: The association of two or more circuits or systems in such a way that power or signal information may be transferred from one system or circuit to another.

2.2.9 crest factor (of a periodic function): The ratio of the peak value of a periodic function (y_{peak}) to the root mean square (rms) value (y_{rms}); $cf = y_{peak}/y_{rms}$.

2.2.10 critical load: Devices and equipment whose failure to operate satisfactorily jeopardizes the health or safety of personnel, and/or results in loss of function, financial loss, or damage to property deemed critical by the user.

NOTE—This definition refers to function of the device, whereas *The Authoritative Dictionary* definition links the device to the quality of its power supply.

2.2.11 customer premises equipment (CPE): Any equipment connected by customer premises wiring to the customer side of the demarcation point (network interface). (ANSI T1.318)

2.2.12 dc equipment grounding conductor (DCEG): The conductor that bonds an equipment frame, cabinet, or other enclosure to the site grounding system. The DCEG may also bond an equipment unit within a frame, cabinet, or enclosure to the site grounding system.

2.2.13 dc system grounding conductor (DCG): A conductor or conductive path used to provide a connection between one side of a dc source and a point on the site grounding system. The dc source can be a battery plant, a converter plant, or one or more individual dc/dc converters.

2.2.14 differential-mode noise: *See:* **transverse-mode noise.**

2.2.15 direct-reading ammeters: Ammeters that employ a shunt and are connected in series and carry some of the line current through them for measurement purposes. They are part of the circuit being measured.

2.2.16 displacement power factor: *See:* **power factor, displacement.**

2.2.17 distortion factor: The ratio of the root square value of the harmonic content to the root square value of the fundamental quantity, expressed as a percent of the fundamental. *See also:* **total harmonic distortion**. (IEEE Std 519™)

2.2.18 dropout: A loss of equipment operation (discrete data signals) due to noise, voltage sags, or interruption. (IEEE Std 1159™)

2.2.19 efficiency: The output real power divided by the input real power.

[3]Notes in text, tables, and figures are given for information only and do not contain requirements needed to implement the recommended practice.

 Copyright © 2006 IEEE. All rights reserved.

2.2.20 electrical noise: *See:* **noise, electrical.**

2.2.21 equipment grounding conductor (EGC): The conductor used to connect the non-current- carrying parts of conduits, raceways, and equipment enclosures to the grounding electrode at the service equipment (main panel) or secondary of a separately derived system (e.g., isolation transformer).

NOTE—This term is defined more specifically in Article 100 of the NEC.

2.2.22 failure mode: The effect by which a failure is observed to occur.

2.2.23 flicker: A variation of input voltage, either magnitude or frequency, sufficient in duration to allow visual observation of a change in electric light source intensity.

2.2.24 form factor (periodic function): The ratio of the root square value to the average absolute value, averaged over a full period of the function.

2.2.25 forward transfer impedance: An attribute similar to internal impedance of a power source, but at frequencies other than the nominal (e.g., 60 Hz power frequency). Knowledge of the forward transfer impedance allows the designer to assess the capability of the power source to provide load current (at the harmonic frequencies) needed to preserve a good output voltage waveform. Generally, the frequency range of interest is 60 Hz to 3 kHz for 50 Hz to 60 Hz power systems, and 20 KHz to 25 kHz for 380 Hz to 480 Hz power systems.

2.2.26 ground: (A) A conducting connection, whether intentional or accidental, by which an electric circuit or equipment is connected to the earth or to some conducting body of relatively large extent that serves in place of the earth. **(B)** High-frequency reference. *See also:* **signal reference structure.**

NOTE—Grounds are used for establishing and maintaining the potential of the earth (or of the conducting body), or approximately that potential, on conductors connected to it and for conducting ground currents to and from earth (or the conducting body).

2.2.27 ground electrode: A conductor or group of conductors in intimate contact with the earth for the purpose of providing a connection with the ground. (NEC)

2.2.28 ground electrode, concrete-encased: Also known as a *Ufer ground*. A grounding electrode completely encased within concrete, located within, and near the bottom of, a concrete foundation or footing or pad, that is in direct contact with the earth.

NOTE—This term is defined more specifically in Article 250 of the NEC.

2.2.29 ground impedance tester: A multifunctional instrument designed to detect certain types of wiring and grounding problems in low-voltage power distribution systems.

2.2.30 ground loop: A potentially detrimental loop formed when two or more points in an electrical system that are nominally at ground potential are connected by a conducting path such that either or both points are not at the same ground potential.

2.2.31 ground, radial: A conductor connection by which separate electrical circuits or equipment are connected to earth at one point. Sometimes referred to as a *star ground.*

2.2.32 ground window: The area through which all grounding conductors, including metallic raceways, enter a specific area. It is often used in communications systems through which the building grounding system is connected to an area that would otherwise have no grounding connection.

2.2.33 harmonic distortion: The mathematical representation of the distortion of the pure sine waveform. *See also:* **distortion factor.**

Copyright © 2006 IEEE. All rights reserved.

NOTE—See Figure 2-1.

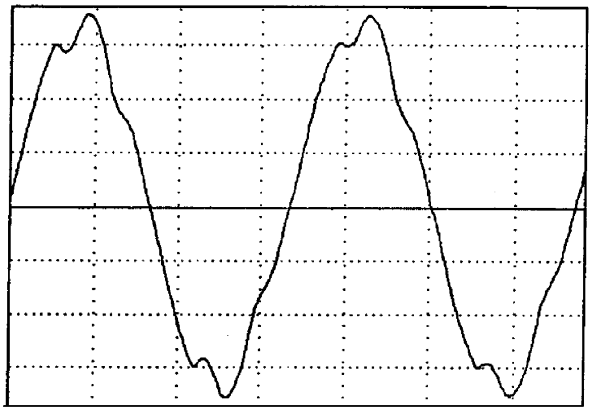

Horizontal 5 milliseconds/division Vertical 50 volts/division

Reprinted with permission from *The Dranetz Field Handbook for Power Quality Analysis* [B5].

Figure 2-1—Distortion example

2.2.34 impulse: *See:* **transient.**

2.2.35 input power factor (of a system): The ratio at the input of active power (measured in watts or kilowatts) to input apparent power (measured in volt-amperes or kilovolt-amperes) at rated or specified voltage and load. *See also:* **power factor, displacement; power factor, total.**

2.2.36 input voltage range (of a power system): The range of input voltage over which the system can operate properly. (ANSI C84.1)

2.2.37 inrush: The amount of current that a load or device draws when first energized.

2.2.38 insulated equipment ground: An insulated equipment grounding conductor (EGC) runs in the same conduit or raceway as the supply conductors. This conductor is insulated from the metallic raceway and all ground points throughout its length. It originates at an insulated (isolated) grounding receptacle or equipment input terminal block and terminates at the point where neutral and ground are bonded at the power source.

NOTE—This term is defined more specifically as *isolated equipment ground* in the NEC, but this recommended practice discourages the use of the word *isolated* as this has caused confusion. This equipment ground is not isolated from the grounding system for the electrical distribution system.

2.2.39 insulated grounding receptacle (IGR): A receptacle in which the grounding terminal is purposely insulated from the receptacle mounting means, for the reduction of electrical noise (electromagnetic interference) on the grounding circuit. The receptacle grounding terminal shall be grounded by an insulated (isolated) EGC run with the circuit conductors.

NOTE—This term is defined as *isolated ground receptacle* in the NEC, but this recommended practice discourages the use of the word *isolated* as this has caused confusion. This equipment ground is not isolated from the grounding system for the electrical distribution system.

2.2.40 interruption: The complete loss of voltage for a time period.

2.2.41 interruption, momentary (power quality monitoring): (A) A type of short duration variation. **(B)** The complete loss of voltage (<0.1 pu) on one or more phase conductors for a time period between 0.5 cycles and 3 s. (IEEE Std 1159)

2.2.42 isolated bonding network: *See:* **bonding network, isolated.**

 Copyright © 2006 IEEE. All rights reserved.

2.2.43 isolation: Separation of one section of a system from undesired influences of other sections.

2.2.44 linear load: A load that draws a sinusoidal current wave when supplied by a sinusoidal voltage source.

2.2.45 momentary interruption: *See:* **interruption, momentary.**

2.2.46 noise, common-mode: *See:* **common-mode noise.**

2.2.47 noise, differential-mode: *See:* **transverse-mode noise.**

2.2.48 noise, electrical: Unwanted electrical signals that produce undesirable effects in the circuits of the control systems in which they occur.

NOTE—For this recommended practice, *control systems* is intended to include electronic equipment in total or in part (see Figure 2-2).

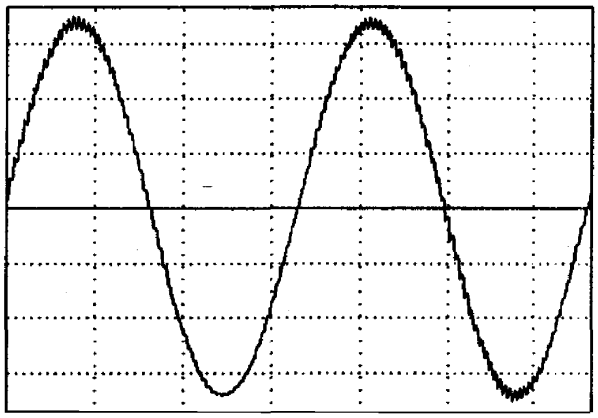

Horizontal 5 milliseconds/division Vertical 200 volts/division

Reprinted with permission from *The Dranetz Field Handbook for Power Quality Analysis* [B5].

Figure 2-2—Noise example

2.2.49 noise, normal-mode: *See:* **transverse-mode noise.**

2.2.50 noise, transverse-mode: *See:* **transverse-mode noise.**

2.2.51 nonlinear load: A load that draws a nonsinusoidal current wave when supplied by a sinusoidal voltage source. (IEEE Std 519)

2.2.52 nonlinear load current: Load current that is associated with a nonlinear load. *See also:* **nonlinear load.**

2.2.53 normal-mode noise: *See:* **transverse-mode noise.**

2.2.54 notch: A switching (or other) disturbance of the normal power voltage waveform, lasting less than a half-cycle, which is initially of opposite polarity than the waveform, and is thus subtractive from the normal waveform in terms of the peak value of the disturbance voltage. This includes complete loss of voltage for up to a half-cycle. *See also:* **transient.**

NOTE—See Figure 2-3.

Copyright © 2006 IEEE. All rights reserved.

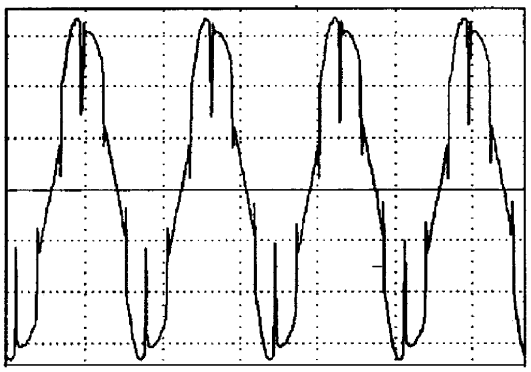

Horizontal 10 milliseconds/division Vertical 200 volts/division

Reprinted with permission from *The Dranetz Field Handbook for Power Quality Analysis* [B5].

Figure 2-3—Notches

2.2.55 output (reverse transfer) impedance (of a power source): Similar to forward transfer impedance, but it describes the characteristic impedance of the power source as seen from the load, looking back at the source. *See also:* **forward transfer impedance.**

2.2.56 overvoltage: When used to describe a specific type of long duration variation, refers to an rms increase in the ac voltage, at the power frequency, for a period of time greater than 1 min. Typical values are 1.1 pu to 1.2 pu. *See also:* **swell; transient.** (IEEE Std 1159)

2.2.57 pathway: A facility for the placement of telecommunications. (TIA/EIA 607)

2.2.58 phase shift: The displacement between corresponding points on similar wave shapes; it is expressed in degrees leading or lagging.

2.2.59 power disturbance: Any deviation from the nominal value (or from some selected thresholds based on load tolerance) of the input ac power characteristics.

2.2.60 power disturbance monitor: Instrumentation developed specifically to capture power disturbances for the analysis of voltage and current measurements.

2.2.61 power factor, displacement: (A) The displacement component of power factor. **(B)** The ratio of the active power of the fundamental wave, in watts, to the apparent power of the fundamental wave, in volt-amperes.

2.2.62 power factor, total: The ratio of the total power input, in watts, to the total volt-ampere input.

NOTE—This definition includes the effect of harmonic components of current and voltage and the effect of phase displacement between current and voltage.

2.2.63 power quality: The concept of powering and grounding electronic equipment in a manner that is suitable to the operation of that equipment and compatible with the premise wiring system and other connected equipment.

2.2.64 radial ground: *See:* **ground, radial.**

2.2.65 recovery time: Specifies the time needed for the output voltage or current to return to a value within the regulation specification after a step load or line change.

 Copyright © 2006 IEEE. All rights reserved.

NOTE 1—Clarification notes from *The Authoritative Dictionary* are excluded.

NOTE 2—For this recommended practice, recovery time may also indicate the time interval required to bring a system back to its operating condition after an interruption or dropout.

2.2.66 safety ground: *See:* **equipment grounding conductor.**

2.2.67 sag: An rms reduction in the ac voltage, at the power frequency, for durations from a half-cycle to a few seconds. *See also:* **notch; undervoltage.**

NOTE 1—The IEC terminology is *dip.*

NOTE 2—See Figure 2-4.

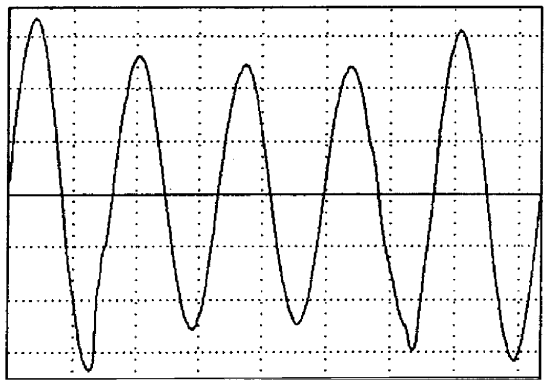

Horizontal 10 milliseconds/division Vertical 50 volts/division

Reprinted with permission from *The Dranetz Field Handbook for Power Quality Analysis* [B5].

Figure 2-4—Sag

2.2.68 shield: Braid copper, metallic sheath, or metallic-coated polyester tape (usually copper or aluminum) applied over the insulation of a conductor or conductors for the purpose of reducing electrostatic coupling between the shielded conductors and others that may be either susceptible to, or generators of, electrostatic fields (noise). When electromagnetic shielding is intended, the term *electromagnetic* is usually included to indicate the difference in shielding requirements and material.

2.2.69 shielding: The process of applying a conducting barrier between a potentially disturbing noise source and electronic circuitry. Shielding is used to protect cables (data and power) and electronic circuits. Shielding may be accomplished by the use of metal barriers, enclosures, or wrappings around source circuits and receiving circuits.

2.2.70 signal reference structure (SRS): A system of conductive paths among interconnected equipment that reduces noise-induced voltages to levels that minimize improper operation. Common configurations include grids and planes.

2.2.71 single-point connection bar: A copper bus bar located entirely within the single-point connection window (SPCW) and serving as a means for bonding the metallic conductors associated with the isolated (insulated) bonding network (IBN) to ground. After passing through the SPCW, these conductors must remain insulated from the common bonding network (CBN); no additional paths to ground, intentional or unintentional, are permitted inside the IBN.

2.2.72 single-point connection window (SPCW): The interface or transition region between an IBN and CBN, typically envisaged as a sphere with a diameter of 2 m (6 ft).

Copyright © 2006 IEEE. All rights reserved.

2.2.73 single-point connection (SPC): Unique location where an IBN is connected to the CBN, usually to the grounding electrode system or its extension.

2.2.74 slew rate: Rate of change of (ac voltage) frequency.

2.2.75 surge: *See:* **transient.**

2.2.76 surge protective device (SPD): A device that is intended to limit transient overvoltages and divert surge currents. It contains at least one nonlinear component.

2.2.77 surge suppressor: A device operated in conformance with the rate of change of current, voltage, power, etc., to prevent the rise of such quantity above a predetermined value.

2.2.78 swell: An increase in rms voltage or current at the power frequency for durations from 0.5 cycle to 1.0 min. Typical values are 1.1 pu to 1.8 pu. (IEEE Std 1159)

NOTE—See Figure 2-5.

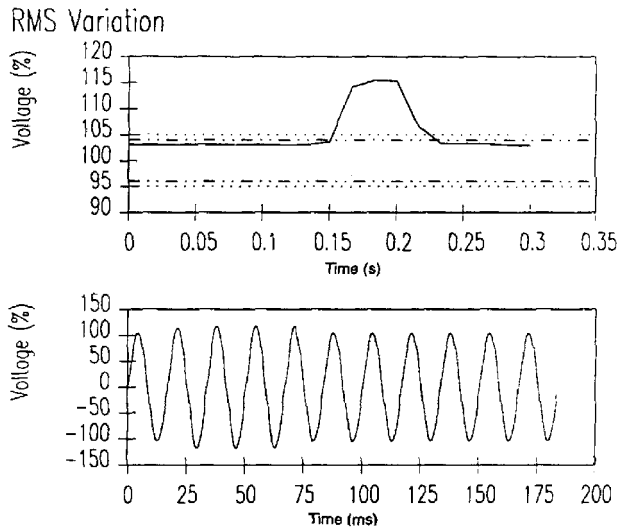

Source: IEEE Std 1159.

Figure 2-5—Swells occurring upon recovery from a remote system fault

2.2.79 telecommunications: Any transmission, emission, and reception of signs, signals, writings, images, and sounds, i.e., information of any nature by cable, radio, optical, or other electromagnetic systems. (TIA/EIA 607)

2.2.80 telecommunications equipment room (TER): A centralized space for telecommunications equipment that serves the occupants of the building.

2.2.81 total harmonic distortion (THD): *See:* **distortion factor.**

2.2.82 total power factor: *See:* **power factor, total.**

2.2.83 transfer time (uninterruptible power supply): The time that it takes an uninterruptible power supply (UPS) to transfer the critical load from the output of the inverter to the alternate source, or back again.

 Copyright © 2006 IEEE. All rights reserved.

2.2.84 transient: A subcycle disturbance in the ac waveform that is evidenced by a sharp, brief discontinuity of the waveform. May be of either polarity and may be additive to, or subtractive from, the nominal waveform. *See also:* **notch; overvoltage; swell.**

2.2.85 transient voltage surge suppressor (TVSS): A device that functions as an SPD or surge suppressor.

2.2.86 transverse-mode noise (with reference to load device input ac power): Noise signals measurable between or among active circuit conductors feeding the subject load, but not between the EGC or associated SRS and the active circuit conductors.

2.2.87 undervoltage: When used to describe a specific type of long duration variation, refers to an rms decrease in the ac voltage, at the power frequency, for a period of time greater than 1 min. Typical values are 0.8 pu to 0.9 pu. (IEEE Std 1159)

2.2.88 voltage distortion: Any deviation from the nominal sine waveform of the ac line voltage.

2.2.89 voltage regulation: The degree of control or stability of the rms voltage at the load. Often specified in relation to other parameters, such as input voltage changes, load changes, or temperature changes.

2.3 Words avoided

The following words have a varied history of usage, and some may have specific definitions for other applications. It is an objective of this recommended practice that the following ambiguous words not be used to generally describe problem areas nor solutions associated with the powering and grounding of electronic equipment:

Blackout

Brownout

Clean ground

Clean power

Computer grade ground

Conducting barriers

Dedicated ground

Dirty ground

Dirty power

Equipment safety grounding conductor

Frame ground

Frequency shift

Glitch

Natural electrodes

Copyright © 2006 IEEE. All rights reserved.

Power surge

Raw power

Raw utility power

Shared circuits

Shared ground

Spike

Subcycle outages

Type I, II, III power disturbances

2.4 Acronyms and abbreviations

The following acronyms and abbreviations are utilized throughout this recommended practice:

ACEG	ac equipment grounding conductor
ALVRT	automatic line voltage regulating transformer
ASAI	average service availability index
ASD	adjustable-speed drive
CAD	computer-aided design
CATV	cable accessed television
CBEMA	Computer and Business Equipment Manufacturers Association
CBN	common bonding network
CDCPS	centralized dc power system
CEA	Canadian Electrical Association
CG	cloud-to-ground
CMR	common-mode rejection
CO-OSP	customer-owned outside the plant
COTC	central office trunk cable
CPC	computer power center
CPE	customer premises equipment
CPU	central processing unit

 Copyright © 2006 IEEE. All rights reserved.

CRT	cathode-ray tube
CT	current transformer
CVT	constant voltage transformer
DCEG	dc equipment grounding conductor
DCG	dc system grounding conductor
DVR	dynamic voltage restorer
EFT	electrical fast transient
EGC	equipment grounding conductor
EMC	electromagnetic compatibility
EMI	electromagnetic interference
EMT	electrical metallic tubing
EPRI	Electric Power Research Institute
ESD	electrostatic discharge
FCC	Federal Communication Commission
FFT	fast Fourier transform
FMC	flexible metal conduit
GPR	ground potential rise
GTO	gate turn-off
IBA	inside building area
IBN	isolated (insulated) bonding network
IEC	International Electrotechnical Commission
IG	insulated ground or grounding
IGR	insulated grounding receptacle
IMC	intermediate metal conduit
IT	information technology
ITE	information technology equipment
ITI	Information Technology Industry Council (also known as ITIC)

Copyright © 2006 IEEE. All rights reserved.

LAN	local area network
LDC	line drop compensator
LPS	lightning protection system
LVD	low-voltage disconnect
MCBN	mesh common bonding network
MCT	metal cable tray
M-G	motor-alternator/generator
MIBN	mesh isolated (insulated) bonding network
MOV	metal-oxide varistor
MPG	multipoint grounding
MTBF	mean time between failures
NEC	National Electrical Code
NEMA	National Electrical Manufacturers Association
NEMP	nuclear electromagnetic pulse
NIST	National Institute of Standards and Technology
NPL	National Power Laboratory
NRTL	nationally recognized testing laboratory
OBA	outside building area
OEM	original equipment manufacturer
OSHA	Occupational Safety and Health Administration
OSP	outside plant
PABX	private automatic branch exchange
PC	personal computer
PCC	point of common coupling
PDU	power distribution unit
PoE	Power over Ethernet
POUTS	point-of-use transfer switch

 Copyright © 2006 IEEE. All rights reserved.

PTN	public telephone network
PWM	pulse-width modulation
RAA	restricted access area
RFI	radio-frequency interference
RMC	rigid metal conduit
rms	root mean square
SCBN	sparse common bonding network
SCR	silicon-controlled rectifier
ScTP	screened twisted pair
SDS	separately derived ac system
SIBN	star isolated (insulated) bonding network
S-MIBN	sparse-mesh isolated (insulated) bonding network
SMPS	switched-mode power supply
SPC	single-point connection
SPCW	single-point connection window
SPD	surge protective device
SPG	single-point ground or grounding
SRE	surge reference equalizer
SRG	signal reference grid
SRGP	signal reference ground plane
SRP	signal reference plane
SRS	signal reference structure
SSB	solid-state circuit breaker
SSTS	solid-state transfer switch
STATCON	static condenser
STS	static transfer switch
Telco	telecommunications company

Copyright © 2006 IEEE. All rights reserved.

TER	telecommunications equipment room
TGB	telecommunications grounding bus bar
THD	total harmonic distortion
TIA	Telecommunications Industry Association
TMGB	telecommunications main grounding bus bar
TSP	telecommunications service provider
TTE	telecommunications terminal equipment
TVSS	transient voltage surge suppressor
UL	Underwriters Laboratories
UPS	uninterruptible power supply
UTP	unshielded twisted pair
VDT	video display terminal
VFD	variable-frequency speed drive

2.5 Normative references

The following referenced documents are indispensable for the application of this recommended practice. For dated references, only the edition cited applies. For undated references, the latest edition of the referenced document (including any amendments or corrigenda) applies.

ANSI C84.1, American National Standard for Electric Power Systems and Equipment—Voltage Ratings (60 Hz).[4]

ANSI T1.318, Electrical Protection Applied to Telecommunications Network Plant at Entrances to Customer Structures or Buildings.

IEEE Std 142™, IEEE Recommended Practice for Grounding of Industrial and Commercial Power Systems *(IEEE Green Book)*.[5, 6]

IEEE Std 519™, IEEE Recommended Practices and Requirements for Harmonic Control in Electric Power Systems.

IEEE Std 1159™, IEEE Recommended Practice for Monitoring Electric Power Quality.

[4]ANSI publications are available from the Sales Department, American National Standards Institute, 25 West 43rd Street, 4th Floor, New York, NY 10036, USA (http://www.ansi.org/).

[5]IEEE publications are available from the Institute of Electrical and Electronics Engineers, Inc., 445 Hoes Lane, Piscataway, NJ 08854, USA (http://standards.ieee.org/).

[6]The IEEE standards or products referred to in this clause are trademarks of the Institute of Electrical and Electronics Engineers, Inc.

 Copyright © 2006 IEEE. All rights reserved.

NFPA 70, 2005 Edition, National Electrical Code® (NEC®).[7]

TIA/EIA 607, Commercial Building Grounding/Bonding/Requirement Standard.[8]

2.6 Bibliography

Additional information may be found in the following sources.

[B1] IEEE 100, *The Authoritative Dictionary of IEEE Standards Terms.*

[B2] IEEE Std C62.41™-1991, IEEE Recommended Practice for Surge Voltages in Low-Voltage AC Power Circuits.

[B3] IEEE Surge Protection Standards Collection (C62), 1995 Edition.

[B4] McEachern, A., *Handbook of Power Signatures.* Foster City, CA: Basic Measuring Instruments, 1988.

[B5] *The Dranetz Field Handbook for Power Quality Analysis.* Edison, NJ: Dranetz Technologies, Inc., 1991.

[7]The NEC is published by the National Fire Protection Association, Batterymarch Park, Quincy, MA 02269, USA (http://www.nfpa.org). Copies are also available from the Institute of Electrical and Electronics Engineers, Inc., 445 Hoes Lane, Piscataway, NJ 08854, USA (http://standards.ieee.org/).

[8]TIA/EIA publications are available from Global Engineering Documents, 15 Inverness Way East, Englewood, CO 80112, USA (http://global.ihs.com/).

Copyright © 2006 IEEE. All rights reserved.

Chapter 3
General needs guidelines

3.1 Introduction

The need to provide reliable power with a steady voltage and frequency has been recognized since the inception of the electric utility industry. However, the engineering reality of a large power system is that disturbances are unavoidable. These disturbances in the quality of power delivered can occur during the normal operation of the electric power system, like switching of a power factor correction device, or during abnormal events, like clearing a feeder short circuit. Depending on end-user equipment or process immunity, damage, operational upset, or no effect may be the result. An incompatibility may be corrected at the utility, at the equipment, or by adding some power conditioning in between, and blame is difficult to place. This dichotomy may be a source of misunderstandings, at best, or a source of disputes, at worst, between suppliers and users of electric power, and between manufacturers and users of susceptible, sensitive equipment. One of the goals of this recommended practice is to promote better understanding of the significant compatibility issues and to dispel some misconceptions about how to avoid or correct problems of incompatibility.

This chapter presents a brief description of the nature of power quality problems, of possible solutions, and of the resources available for dealing with these problems. A brief historical review of the evolution of interest in power quality and resolution of some of the earlier conflicts provides a perspective on solving today's problems.

3.1.1 Historical perspective

As public expectations of uniform lighting intensity grew and as more manufacturers began to use electric motors to drive production lines, utilities adopted stricter standards for voltage regulation. During the 1930s, utilities also found that they had to pay increasing attention to voltage disturbances caused by customer equipment on their distribution lines. Research showed that flicker in incandescent lamps caused by voltage fluctuations could be perceived even if the pulsation on the power line was only a third of a volt on a 120 V system. This type of problem led to an increasing number of industry standards for end-use equipment aimed at reducing voltage fluctuations sent back along a power line.

A somewhat different problem arose during the 1950s as air conditioners rapidly became popular. When early models were switched on, so much energy was used to get their compressors started that the incoming line voltage was temporarily reduced and the motors often could not reach operating speed, ran poorly, or stalled. Fortunately, in this case, a remedy was readily available—adding power-factor correction capacitors in the system.

The reason complaints about the quality of power today cannot be handled so simply is that they seem to reflect both a multitude of different causes and a variety of specific sensitivities in the customer equipment most affected. Just as the air conditioner problems were eventually solved by a coordinated effort among affected parties, so too can new standards on equipment and on levels of permissible voltage distortions help guide the design and application of both sensitive electronic equipment and heavy-duty apparatus. Such standards will have to be applied much more selectively than in the past, however, and address a much more complex set of issues.

3.1.2 Proliferation of power electronic equipment

The advent of electronic power conversion has been widely applauded by users, but the drawbacks from the point of view of power quality have not always been recognized. The very advantages of solid-state devices that made possible modern switching power supplies, inverter-rectifiers, high-frequency induction heating,

Copyright © 2006 IEEE. All rights reserved.

and adjustable-speed drives also make these power converters into generators of harmonic currents and additional sources of line-voltage drops. Thus, in addition to the disturbances generated by the normal operation of the familiar power delivery and load equipment, the disturbances resulting from the new electronic loads must be taken into consideration.

Harmonic currents caused by many types of customer load and utility equipment provide an example of this complexity. For many years, harmonic currents originated mainly from a few large-scale sources, such as arc furnaces and high-voltage dc transmission terminals. In these cases, they could be removed by placing a large (and expensive) filter between the source and the main power line. Today, however, significant power line harmonics are being caused by many small, widely dispersed customer loads, such as rectifiers and solid-state controls for adjustable-speed motors. At the same time, an increasing number of other customers are using susceptible equipment, such as computers, the operation of which may be adversely affected by harmonics.

It would not be economically feasible to detect and filter each small source of harmonics or to isolate each susceptible load from all power line disturbances. A more practical approach is to control harmonics by agreement on limits for emission levels with filters installed on major offending loads, while defining an acceptable susceptibility level for equipment. Unusually susceptible electronic equipment may be supplied by special power conditioning interfaces, external to, or incorporated with, the equipment. Such an approach will require collaboration among utilities, equipment manufacturers, users, regulatory agencies, and standards-setting bodies.

3.1.3 Proliferation of microelectronic equipment

Increased use of microelectronics in equipment, controls, and processes has also increased the need to consider the quality of powering and grounding systems in the industrial sector. Many tools and equipment are electronic-processor based as factories become more automated and process intensive. Programmable logic systems control electronic adjustable-speed drives and servos based on inputs from electronic sensors and resolvers. Often the mechanical aspects of these processes, such as web tensioning, spindle acceleration, conveyor speed, extruder flow, or spray pressure, cannot tolerate variations caused by momentary voltage fluctuations.

In the commercial sector we find personal computers (PCs), fax machines, copiers, electronic fluorescent lighting, adjustable-speed heat pumps, and various electronic communications. Even in the residential sector, we find electronics in every room from toys and tools to microwave ovens. Personal computers connected to the Internet, home entertainment systems, VCRs, CD and DVD players, and digital clocks abound. We can expect proliferation of electronically driven heat pumps, washing machines, and lighting—as well as microwave clothes drying, electric vehicle battery charging, and the “all electronic kitchen.”

Many of these electronic-based appliances are sensitive to voltage variations that were not noticed in the past. We now have more electronics in the power system than ever before and the forecast is for increasing levels. The bottom line is that our equipment has changed radically and a key question is, “Can the power supply as designed handle it?” Disturbance mitigation and power conditioning equipment, and associated costs, are well known but there is no clear assignment of financial responsibility.

3.1.4 The need for quality of power standards

Emerging concerns about electronic equipment upset and related issues have resulted in more attention to the quality of the power necessary for successful operation. Along with the need for quality power is the need for practical compatibility levels of end-user equipment, and for definition of economic responsibility in the producer-user partnership. The term *power quality* is now widely used, but objective criteria for measuring the quality of power—a prerequisite for quantifying this quality—need better definition. A high level of power quality is generally understood as a low level of power disturbances, however a high level of

 Copyright © 2006 IEEE. All rights reserved.

equipment tolerance may also be an effective solution. Agreement on acceptable levels of disturbances and of tolerance to these disturbances is needed.

Another difficulty in assessing the need for an interface between the utility power and susceptible loads is the subjective nature of estimating the cost of equipment misoperation attributable to power disturbances. This particular aspect is addressed from the technical point of view in this recommended practice, but the detailed economics are beyond its scope.

3.1.5 Conflicting design philosophies for performance and safety

The issue of power quality is made more difficult by conflicting philosophies advocated by people of different technical backgrounds and commercial interests. An example of this problem is found in the apparent conflicts resulting from interpretations of grounding requirements. The general requirement of a safe configuration and a safe operation for a power system is endorsed by all parties (utilities, users, regulatory bodies, voluntary standards organizations, etc.), but in some instances these requirements translate into wiring practices alleged to interfere with smooth operation of electronic systems.

Many anecdotal case histories have been encountered where system designers complain the requirements of the National Electrical Code® (NEC®) (NFPA 70, 2005 Edition)[1] prevent their system from performing in a satisfactory manner. This apparent conflict of philosophy can only be settled by giving safety the prevailing directive. That prevailing directive is precisely the purpose of the NEC, and correct application of the NEC articles does not prevent satisfactory operation of properly wired and grounded installations. If any adaptations have to be made for the system to operate satisfactorily, the equipment manufacturer must incorporate them in the equipment design, rather than ask for deviations from the NEC.

3.2 Power quality considerations

3.2.1 General discussion

Power systems operate with a constant line voltage, supplying power to a wide variety of load equipment. Power levels range from a few watts to megawatts, and the voltages at which the energy is generated, transported, and distributed range from hundreds of volts to hundreds of kilovolts. Transmission and primary distribution of this power are made at high voltages, tens to hundreds of kilovolts, in order to provide efficient and economic transportation of the energy over long distances. Final utilization is generally in the range of 120 V (typical residential) to less than one thousand volts (industrial), and a few thousands of volts for larger loads.

At all these voltage and power levels, no matter how high, the equipment is dependent upon maintenance of a normal operating voltage range. At higher than normal levels, there is limited capability for component voltage withstand. At lower than normal levels, the equipment performance is generally unsatisfactory or there is a risk of equipment damage. These two disturbances, excessive voltage and insufficient voltage, are described with different names depending on their duration. There are also types of disturbances, as described in 3.2.2, that involve waveform distortion and other deviations from the expected sine wave.

3.2.2 Classification of disturbances

Four power system parameters—frequency, amplitude, waveform, and symmetry—can serve as frames of reference to classify the voltage and power disturbances according to their impact on the quality of the normal sine wave of system voltage. A brief discussion of the need for evaluation of their impact on sensitive loads follows.

[1]Information on references can be found in 3.9.

Copyright © 2006 IEEE. All rights reserved.

a) Frequency variations are rare on utility-connected systems, but engine-generator-based distribution systems can experience frequency variations due to load variations and equipment malfunctions.

b) Amplitude variations can occur in several forms; their description is inextricably associated with their duration. They range from extremely brief duration to steady-state conditions, making the description and definition difficult, even controversial at times. Their causes and effects need close examination to understand the mechanisms and to define an appropriate solution.

c) Voltage waveform variations occur when nonlinear loads draw a current that is not sinusoidal. One could also describe an amplitude variation as momentary voltage waveform variation, but the intended meaning of the term is a steady variation of the voltage waveform or lasting at least over several cycles. This type of disturbance may be described as harmonic distortion because it is easy to analyze as the superposition of harmonics to the nominal frequency of the power system.

d) Dissymmetry, also called *unbalance*, occurs when unequal single-phase loads are connected to a three-phase system and cause a loss of symmetry. This type of disturbance primarily concerns rotating machines and three-phase rectifiers and, as such, is not receiving broad attention. It is important, however, for machine designers and users. The percentage by which one-phase voltage differs from the average of all three is the usual description of this type of disturbance. A detailed definition of various measures of voltage and power quality by magnitude, duration, and spectral content is provided in IEEE Std 1159™.

3.2.3 Origin of disturbances

The term *origin of disturbances* can be understood in at least two different contexts or interpretations. According to one interpretation, the concern is for the source of the disturbance and whether it is external or internal to the particular power system. Typically, the boundary of a power system is defined as the watthour meter, and reference is made to the "utility side" of the meter (utility source side) or to the "user side" of the meter (user load side). According to another interpretation, the concern is for the nature of the disturbance source and is then described in technical terms, such as lightning, load switching, power system fault, and nonlinear loads. Depending on local conditions, one can be more important than the others, but all need to be recognized. The mechanism involved in generating the disturbance also determines whether the occurrence will be random or permanent, and unpredictable or easy to define.

The first interpretation is motivated by the goal of assigning responsibility for the problem and possibly liability for a remedy. The second interpretation is motivated by the goal of understanding the problem and developing a technically sound remedy. When discussing the problem among the parties involved, the different points of view must be recognized, lest misunderstandings occur. In the following paragraphs, the second interpretation leads to a description of mechanisms producing the disturbances.

The general tendency of users is to attribute most of their equipment upset problems to the utility source. Many other sources of disturbances, however, are located within the building and are attributable to operation of other equipment by the end user. Finally, there are sources of disturbances—or system errors—not associated with the power input of the equipment, such as electrostatic discharges to the equipment enclosure or cables, radiated electromagnetic interference (EMI), ground potential differences, and operator errors (see Figure 3-1).

 Copyright © 2006 IEEE. All rights reserved.

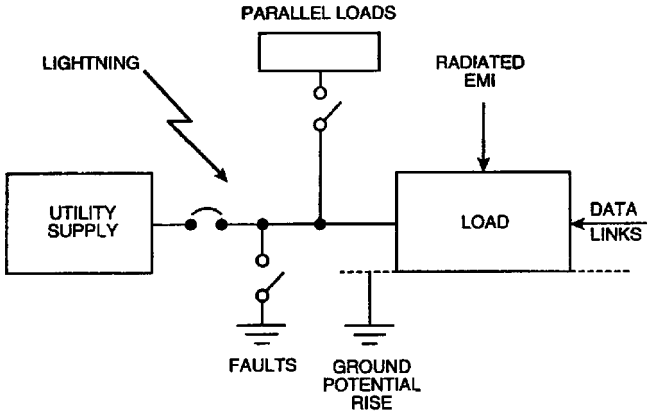

Figure 3-1—Sources of load disturbances (both internal and external)

3.2.4 Expectation of voltage sag disturbance

Power system faults occur on both sides of the meter, resulting from power system equipment failure or external causes (vehicle collisions, storms, human errors). These disturbances can range from a momentary voltage reduction to a complete loss of power lasting for minutes, hours, or days. Their accidental origin makes them unpredictable, although the configuration of a power system and its environment can make it more or less prone to this type of disturbance (see Key [12]).[2] Figure 3-2 shows the typical number of sag events per year by severity level, from a monitoring study conducted in the U.S.

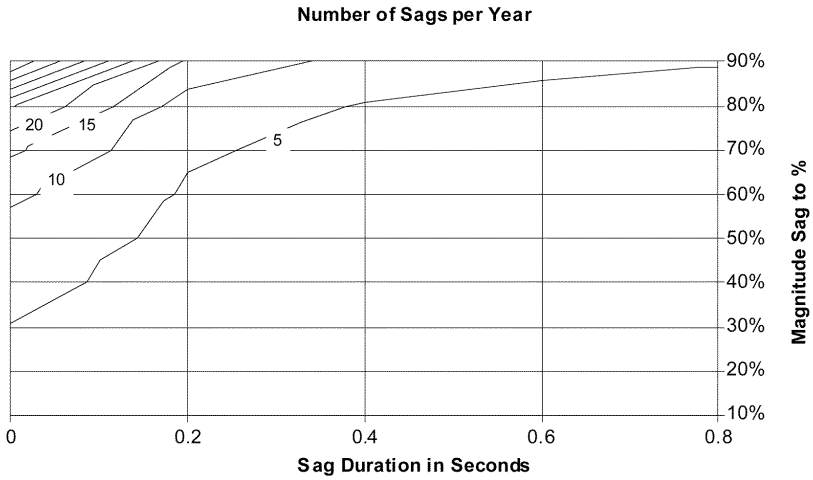

Reprinted with permission from EPRI [B5].

Figure 3-2—Sags per year for 222 sites (from 6/1/93 to 6/1/95). Example data: Not intended to represent typical performance.

[2]The numbers in brackets correspond to those of the bibliography in 3.10.

Copyright © 2006 IEEE. All rights reserved.

3.2.5 Prediction of sag-related upset and damage

Low-voltage conditions are primarily upsetting to the equipment that cannot ride through periods of reduced available voltage. However, some automated processes may be disturbed at a critical time where either the processing equipment or the end product may be damaged. For example, a data processing system or network communication loss can corrupt the information, while low-voltage trip of an automobile glass processing line may leave overheated windows sized to rollers or rough finished windows with blemishes or scars.

Typical low-voltage trip times based on lab testing for several different types of equipment are as follows:

a) Digital clocks: 1 s to 10 s
b) Microprocessor-controlled equipment (PLC, PC, TV, VCR, etc.): 1 to 20 cycles
c) Induction motors: 10 cycles to seconds
d) Motor starters and contactors: 1 to 2 cycles
e) Adjustable-speed drives: 1 cycle to seconds (control dependent)

3.2.6 Expectation of surge disturbance

Some disturbances occur at random and are not repeatable or predictable for a given site although statistical information may be available on their occurrence (see IEEE Std C62.41™). Other disturbances, especially those associated with the operation of other equipment, can be predicted, are repeatable, and can be observed by performing the operating cycle of that equipment.

Lightning surges are the result of direct strikes to the power system conductors as well as the result of indirect effects. Direct strikes inject the total lightning current into the system. The current amplitudes range from a few thousand amperes to a few hundred thousand amperes. However, the rapid change of current through the impedance of the conductors produces a high voltage that causes secondary flashover to ground, diverting some current even in the absence of an intentional diverter. As a result, equipment connected at the end of overhead conductors are rarely exposed to the full lightning discharge current. Indirect effects include induction of overvoltages in loops formed by conductors and ground-potential rises resulting from lightning current in grounding grids or the earth.

A lightning strike to the power system can activate a surge arrester, producing a severe reduction or a complete loss of the power system voltage for one half-cycle. A flashover of line insulators can trip a breaker, with reclosing delayed by several cycles, causing a momentary power outage. Thus, lightning can be the obvious cause of overvoltages near its point of impact, but also a less obvious cause of voltage loss at a considerable distance from its point of impact. Clearly, the occurrence of this type of disturbance is unpredictable at the microscopic level (e.g., specific site). At the macroscopic level (e.g., general area), it is related to geography, seasons, and local system configuration.

Induction of surges by nearby lightning discharges is a less dramatic but more frequent event. The resulting surge characteristics are influenced not only by the driving force—the electromagnetic field—but also by the response of the power system—its natural oscillations. This dual origin makes a general description of the occurrence impractical; nevertheless a consensus exists on representative threats for various environments. Figure 3-3, the classic isokeraunic map of the U.S., shows the average number of days that thunder is heard.

Thunder heard indicates that a lightning discharge has occurred. It may be either from cloud to ground (CG) or within a thundercloud. Most discharges occur within thunderclouds. CG lightning occurs less frequently than lightning within clouds, but the CG is the primary hazard to people or objects on the ground. Figure 3-4 shows a map of the average annual ground flashes per square kilometer in the U.S. between 1989 and 1995.

 Copyright © 2006 IEEE. All rights reserved.

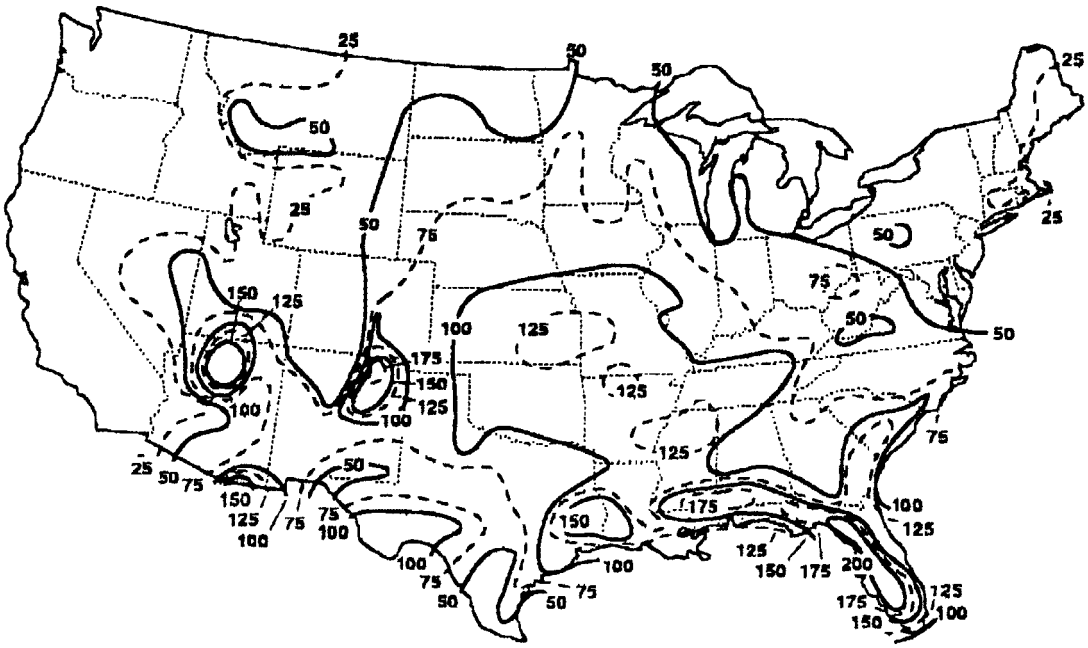

Reprinted with permission from MacGorman, Maier, and Rust [B13].

Figure 3-3—Isokeraunic map showing number of thunderstorm days

Note that most of the continental U.S. experiences at least 2 CG flashes/km^2/y. About one-half of the area will see 4 CG flashes/km^2/y, which is equivalent to about 10 discharges/mi^2/y. The maximum flash densities are found along the southeastern Gulf Coast and the Florida peninsula, where the values approach 20 CG flashes/km^2/y. Overall, about 20 million CG flashes strike the U.S. each year, and lightning is clearly among the nation's most severe weather hazards.

It is useful to estimate how often a normal-sized structure, such as a house, will be struck by lightning. For this, case data from the national lightning detection network are used to identify the typical number of CG flashes. We assume that the house is located in a geographic region with an average of 4 CG flashes/km^2/y (see Figure 3-4). We also assume that the area of the house is about $10 \cdot 20$ m^2 and that there will be a direct strike any time a stepped leader comes within about 10 m of this area. In this case, the effective area of the house is about $30 \cdot 40 = 1200$ m^2, and the house is predicted to be struck, on average, $(1200 \cdot 4)/1\,000\,000 = 4.8 \cdot 10^{-3}$ times a year, or approximately once every 200 years. Another way to think of this hazard is that, in the 4 CG flashes/km^2 region, 1 of 200 houses is predicted to be struck each year, on average.

Load switching is a common cause of surges in power wiring. Whenever a circuit containing capacitance and inductance is being switched on or off, a transient disturbance occurs because the currents and voltages do not reach their final value instantaneously. This type of disturbance is inescapable and its severity depends on the relative power level of the load being switched and on the short-circuit current of the power system in which the switching takes place. Switching large loads on or off can produce long-duration voltage changes beyond the immediate transient response of the circuit. Whether the switching is done by the utility or by the user is immaterial from a technical point of view, although the responsibility may be the subject of a contractual dispute.

Copyright © 2006 IEEE. All rights reserved.

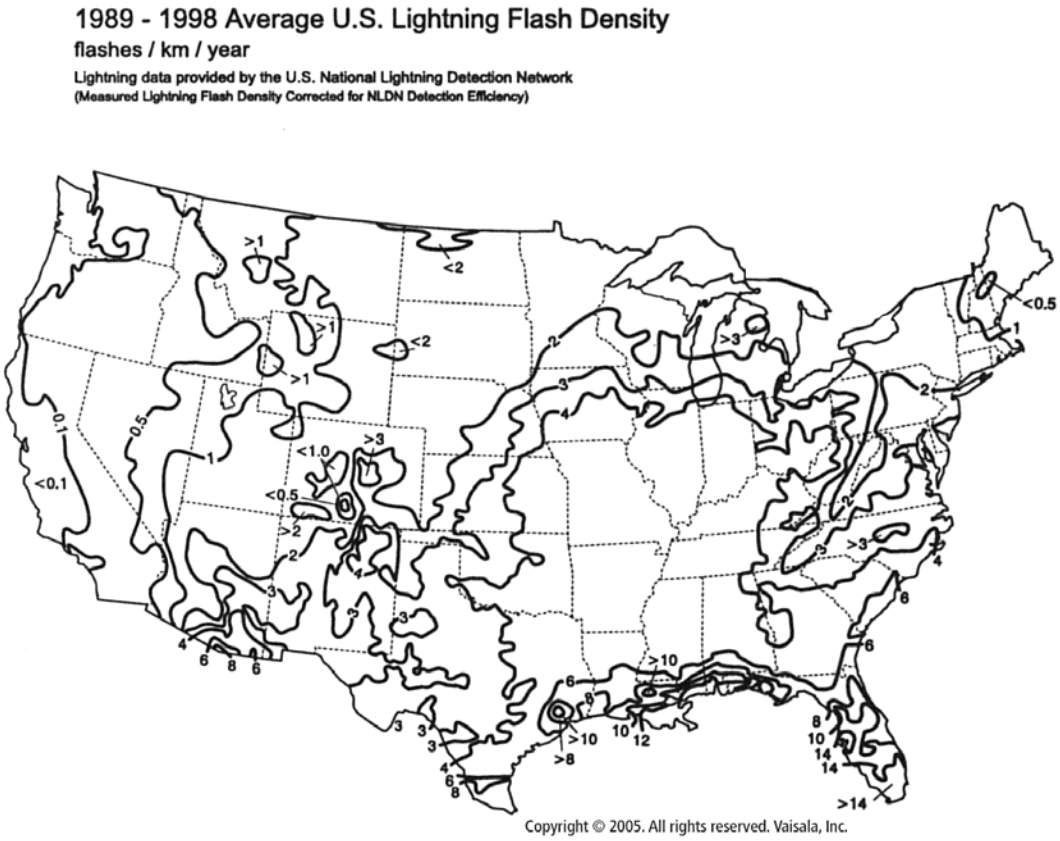

Reprinted with permission from Vaisala, Inc.

Figure 3-4—Average annual CG flashes per km^2 per year

More complex circuit phenomena, such as current chopping, prestrikes, and restrikes, can produce surge voltages reaching ten times the normal circuit voltages, involving energy levels determined by the power rating of the elements being switched. These complex surges can have very destructive effects, even on rugged equipment, and must be controlled at the source as well as mitigated at the loads.

The occurrence of load switching disturbances is somewhat predictable, but not necessarily under controlled conditions. The introduction of power conversion equipment and voltage regulators that operate by switching on and off at high frequency has created a new type of load switching disturbance. These disturbances occur steadily, although their amplitude and harmonic content will vary for a given regulator as the load conditions vary.

Electrostatic discharge (ESD) is a well-known phenomenon, responsible for interference and damage to electronic components and circuit boards when handled in a careless manner. However, from the point of view of a power system engineer, ESDs do not represent a significant threat because the high frequencies involved, just like in the case of the fast transient bursts, quickly attenuate the surge with distance. The discharge of electrostatic charges built upon the human body or objects can also inject unwanted voltages or currents into the circuits. This phenomenon is associated with operator contact with the equipment (e.g., keyboards, panel switches, connectors) rather than with the quality of the incoming power. Thus, it is not included in the scope, but should of course not be ignored when troubleshooting equipment problems.

 Copyright © 2006 IEEE. All rights reserved.

3.2.6.1 Nature of lightning strike damage

Most lightning strikes cause damage as a result of the large current that flows or the heat that is generated by this and the continuing current. If lightning strikes a person, for example, the current can damage the central nervous system, heart, lungs, and other vital organs. Also, many types of electronic circuits can be damaged or destroyed when exposed to an excess current or to an excess voltage produced by that current.

If lightning strikes on or near an overhead electric power or telephone line, a large current will be injected into or induced in the wires, and the current can do considerable damage both to the power and telecommunications equipment and to anything else that is connected to the system. If a lightning surge enters an unprotected residence by way of a power circuit, the voltages may be large enough to cause sparks in the house wiring or appliances. When such flashovers occur, they short-circuit the power system, and the resulting ac power arc can sometimes start a fire. In these cases, the lightning does not start the fire directly but causes a power fault; the power system itself does the damage.

When a building or power line is struck by lightning, or is exposed to the intense electromagnetic fields of a nearby flash, the currents and voltages that appear on the structure are determined by the currents and fields in the discharge and by the electrical response of the object that is struck. The grounding system of the structure is a critical part of the equation in determining what the response to the transient will be. For example, the voltages that appear on the electronics inside a grounded metal building are frequently produced by the fastest rising part of the return stroke current. This fast current excites resonant oscillations on the exterior of the building (like the resonance of a bell) that then couple into the structure via apertures in the metal, such as doors and windows.

The damage caused by lightning is wide and varied. In the case of metals, large currents heat the surface of the conductor by interactions between the air arc and the surface, and the interior of the conductor by electron collisions with the metal lattice. If this heat is large enough, the metal melts or evaporates (see Figure 3-5).

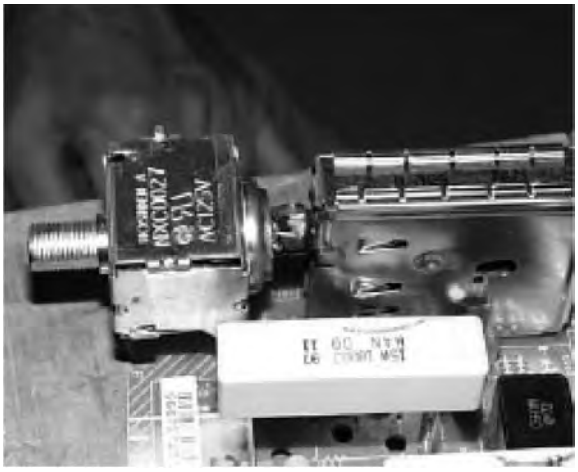

Figure 3-5—Lightning damage to electronic circuits on a circuit board

3.2.6.2 Nature of surge effects in power and communication systems

Power line surges, whether caused by lightning, circuit switching, or other events, typically represent the biggest threat because of larger exposure areas than, for example, a lightning strike. Although damage in the electrical wiring may occur, interactions between power line surges and victim equipment is the main concern. Consider the devices and equipment that may become the victims of a surge and their failure mechanisms. After-the-fact investigations and experimental data show a wide range of surge-related upset and failure mechanisms. These include insulation breakdown, flashover, fracture, thermal and instantaneous

Copyright © 2006 IEEE. All rights reserved.

peak power overloads, and *dV/dt* and *dI/dt* limits being exceeded. The following list gives some generic types of surge victims and the typical failure or upset mechanisms:

a) Electrical insulation breakdown or sparkover

The failure mechanism (breakdown or sparkover) is principally a function of the surge voltage and rise time of the leading edge. Failure rate increases as surge magnitude and/or rise time increases. *Insulation* is to be taken in the broadest sense of solid or liquid material separating energized conductors in equipment, clearances on a printed circuit board (PCB), edges of semiconductor layers, etc. A distinction must be made between the initial breakdown of insulation, related to voltage only, and the final appearance of the damaged insulation, related to the total energy dissipated in the breakdown path. In another situation, the insulation of the first turns of a winding may be subjected to higher stress than the others as the result of the uneven voltage distribution resulting from a steep front rather than only the peak value of the surge.

b) Surge protective device (SPD) failure

Normally, the voltage across the device is essentially constant, and the energy is a function of the surge current level and duration. One failure mode of such a device will occur when the energy dissipated in the bulk material raises the temperature above some critical level. Failure modes associated with the current level, such as flashover on the sides of a varistor disc, failure at the boundary layers of the varistor grains, or fracture of large discs, have also been identified and may not be related to energy.

c) Semiconductor device damage

Inadvertently, devices such as thyristors responding to the rate of voltage change can be turned on by a surge, resulting in failure of the device or hazardous energizing of the load they control. In a similar way, a triac may be turned on by a voltage surge without damage, but still fail by exceeding the peak power limit during a surge-induced turn-on with slow transition time.

d) Power conversion equipment nuisance trip

An example of this is a front-end dc link where the filter-capacitor voltage can be boosted by a surge, resulting in premature or unnecessary tripping of the downstream inverter by on-board overvoltage or overcurrent protection schemes.

e) Data-processing equipment malfunction

In this case, the malfunction (data errors), not damage, may be caused by fast rate of voltage changes (capacitive coupling) or fast rate of current changes (inductive coupling) that reflect the initial characteristic of the surge event.

f) Light bulbs fail prematurely

Lamps may withstand the short burst of additional heating caused by a few microseconds of surge-caused overcurrent. However, they also fail under surge conditions when a flashover occurs within the bulb, triggering a power frequency arc that melts the filament at its point of attachment. This is another failure mechanism originating with insulation breakdown.

Table 3-1 presents a matrix of surge parameters and types of equipment, showing for each type of victim which surge parameter is significant or insignificant. The authors have sought to identify all types of potential victims (and invite additions to this list).

3.2.7 Measurement of power quality

There has been a tendency to attribute disturbances and failures to *power surges*, a term often used by the media but rather ill defined. The ambiguity results in part from an unfortunate dual definition of the word *surge*.

a) To some people, a surge is indeed the phenomenon being discussed here, that is, a transient voltage or current lasting from microseconds to at most a few milliseconds, involving voltages much higher than the normal (two to ten times).

 Copyright © 2006 IEEE. All rights reserved.

b) To other people, a surge is a momentary overvoltage, at the frequency of the power system, and lasting for a few cycles, with voltage levels slightly exceeding the 5% to 10% excursions that are considered normal occurrences.

The term *swell* has been adopted by this recommended practice to describe this second type of overvoltage; perhaps one day it will supplant the usage of surge for that meaning. It would be a mistake to attempt protection against these long-duration power frequency swells with an SPD that is designed to absorb large but short impulses of energy. There is a growing recognition that the horror tales of SPD failures are more likely to be caused by swells rather than by large surges.

Table 3-1—Surge parameters affecting equipment failure modes

Type of equipment	Surge parameters					
	Source impedance	Peak amplitude	Maximum rate of rise	Tail duration	Repetition rate	I^2t in device[a]
Insulation						
—Bulk		X		X		
—Windings		X	X			
—Edges		X	X			
Clamping SPDs						
—Bulk	X	X			X	X
—Boundary layer		X				
Crowbar SPDs	X			X	X	X
Semiconductors						
—Thyristors		X	X			X
—Triacs	X	X	X			X
—IGBTs		X	X			X
Power conversion						
—DC level	X	X		X	X	
—Other			X	X		
Data processing malfunction		X	X		X	

[a] The I^2t in the device is actually the result of the combination of surge parameters and device response to the surge. Like other power- and energy-related equipment stress, I^2t is not an independent parameter of the surge.

Nonlinear loads draw nonsinusoidal currents from the power system, even if the power system voltage is a perfect sine wave. These currents produce nonsinusoidal voltage drops through the system source impedance that distort the sine wave produced by the power plant generator. A typical nonlinear load is a dc power supply consisting of rectifiers and a capacitor-input filter, such as used in most computers, drawing current only at the peaks of the voltage sine wave. This current has a high third harmonic content that has also created a new concern, that of insufficient ampacity of the neutral conductor in a three-phase system feeding power supplies (see Chapter 4 for a discussion of this problem).

3.2.8 Power quality survey data

Power quality site surveys have been performed and reported by a number of investigators. However, the reports are difficult to compare because the names of the disturbances and their thresholds vary among the reports. Manufacturers of disturbance recorders have defined the events reported by their instruments at some variance with other sources of definitions. To help resolve the confusion, IEEE Std 1159 provides unique definitions for each type of disturbance. The results of this effort, however, will take some time to be

Copyright © 2006 IEEE. All rights reserved.

generally recognized and accepted. In the meantime, terms used by different authors might have different meanings, leaving on authors the burden of defining their terms and leaving for readers the burden of being alert for possible ambiguities.

One example of such ambiguities occurs when attempting to summarize data from different surveys. For instance, two surveys have been widely cited (Allen and Segall [B1] and Goldstein and Speranza [B7]); each was aimed at defining the quality of power available for the equipment of concern to the authors. As a result, each author categorized the disturbances according to the criteria significant to that equipment, including the threshold below which disturbances are not recorded by the instrument. With hindsight, it is not surprising that the criteria were different; when comparing the data from the two surveys expressed in percentages (leading to pie chart representations by some authors of application papers), a puzzling difference was found. By analyzing the detail of the survey premises and definitions, the differences can be reconciled to some extent (see Martzloff and Gruzs [B15]).

Advancements in power line monitoring technologies enable sophisticated analyses of the electrical environment. Among the developments that cleared the way for comprehensive, geographically dispersed power line surveys are automated data-acquisition software and remote programming capability of multiple monitoring units. Three of the most recent comprehensive power quality surveys include those conducted by the Canadian Electrical Association (CEA) (see Hughes et al. [B9]), the National Power Laboratory (NPL) (see Dorr [B3]), and the Electric Power Research Institute (EPRI) (see Sabin et al. [B20]), all conducted in North America. The information collected during these three surveys provides a detailed picture of the expected electrical environment in which end-use appliances are intended to be used. The scope of each survey is described in the following paragraphs. (For a detailed description of how the results of these surveys are being presented, see Dorr et al. [B4].)

a) CEA Survey

In 1991, the CEA began a 3-year survey of power quality. The objective of the survey was to determine the general levels of power quality in Canada. The results would serve as a baseline against which future surveys could be compared to determine trends. The results would also familiarize utilities with making power quality measurements and interpreting the data gathered. Twenty-two utilities throughout Canada participated in the survey, with a total of 550 sites monitored for 25 days each.

Residential, commercial, and industrial customer sites were monitored at their 120 V or 347 V service entrance panels. Monitoring was done at the service entrance panel because it was considered to offer a blended average of the power quality throughout the customer's premises. CEA decided that monitoring further into the premises could have made the results unduly influenced by electrical loads on an individual branch circuit. Monitoring at the distribution feeder would not have shown disturbances originating within the customer's own premises. Only line-to-neutral voltages were monitored. Neutral-to-ground voltages were not monitored because neutral is bonded to ground at the service entrance panel.

b) NPL Survey

In 1990, NPL initiated a 5-year survey of single-phase, normal-mode electrical disturbances. The objective of the survey was to provide a large, well-defined database of recorded disturbances that profiles power quality at typical points of power usage. Single-phase, line-to-neutral data was collected at the standard wall receptacle. The disturbances found at this point of utilization are often coupled into computers and other electronic appliances. Data was collected from 130 sites within the continental U.S. and Canada.

The sites included a broad range of building locations, building types, building ages, and population areas. Included were locations where participants felt they had power quality problems and also those where no problems were perceived. The diversity of locations yielded a representative climatic and geographic cross section of the U.S. and Canada as well as a representative cross section of the major types of utility loads (heavy industry, light industry, office and retail stores, residential, and mixed).

 Copyright © 2006 IEEE. All rights reserved.

c) EPRI Survey

In 1992, EPRI conducted a survey to determine the quality of power on ac distribution feeders in the U.S. This project was intended to monitor and then to simulate the electrical disturbances recorded at the selected feeders. Twenty-four geographically dispersed U.S. utilities participated in the survey. The objective of the monitoring portion of the survey was intended to provide a statistically valid set of data reflecting the number and types of electrical disturbances typically found at ac distribution feeders. The survey includes monitoring at 300 locations. Table 3-2 summarizes the parameters of the three surveys.

Table 3-2—Summary overview of the CEA, NPL, and EPRI power quality surveys

Survey	Monitor period	Quantity of data (monitor months)[a]	Number of sites	Measured parameters
CEA	1991 to 1994	530	550	Voltage
NPL	1990 to 1995	1200	130	Voltage
EPRI	1992 to 1995	5400	300	Voltage and current

[a] One monitor month is 30.4 days of data from one monitor.

3.3 Grounding considerations

3.3.1 Grounding for safety

A lot has been written on grounding for industrial and commercial power systems. Proper grounding is essential to safe and satisfactory performance of a power system. There are generally three requirements for such grounding, as follows:

a) Providing a low-impedance path for the return of fault currents, so that an overcurrent protection device can act quickly to clear the circuit

b) Maintaining a low potential difference between exposed metal parts to avoid personnel hazards

c) Overvoltage control

A very comprehensive discussion of these considerations, applicable to any installation, can be found in other *IEEE Color Books*®: IEEE Std 141™, IEEE Std 142™, and IEEE Std 446™.

3.3.2 Referencing for performance

This aspect of grounding is much less well defined than the safety grounding practice. Electronic equipment and systems vary greatly with respect to noise and transient immunity. Some electronic processing system configurations are very difficult to adequately ground in a typical factory or office building installation.

Three particular system installation scenarios tend to experience more grounding- or referencing-related upsets, surge damage, and undesired processing performance than others. When these difficult installation scenarios are encountered, then special attention to grounding details is likely to be required. A summary of what to look for is given in Table 3-3.

Copyright © 2006 IEEE. All rights reserved.

Table 3-3—Electrical measures and equipment symptoms of difficult installation scenarios

Difficult installation scenarios	Troublesome electrical condition	Typical electronic equipment symptoms	What and where to measure
1. Separately located and powered components of the same system	*Different signal reference levels* or induced currents on data cables	Temporary or chronic data errors, hangs or lockups, slow transfers, more retries, or I/O damage	Measure for 60 Hz voltage level between equipment chassis
2. Multiple external connections to ports of a single appliance or system	*Transient voltages and currents* at data and signal port connections	Intermittent lock ups, corrupted signals, or damage of exposed I/O circuits and communication ports	Monitor for transient voltages at equipment terminals
3. A single appliance or system sharing a grounding path with other equipment	*Stray currents and common-mode noise* in equipment grounding conductor (EGC) and on data cables	Random data errors or slow transfer, particularly in analog-based rather than digital-based systems	Check for stray currents above 1A to 2 A in EGC.

3.3.3 Difficult installation scenario 1—An electronic processing system with separately located and powered components interconnected by data or control cables

Here the trouble is different system components (e.g., a computer, a printer, a data network, an industrial process control, or a PC-connected security system) interconnected by data cables and powered from different circuits in the building electric system. This arrangement is often vulnerable to differences in ground reference voltage levels between components or induced currents in data lines, which occur by connection of data cable grounds. For example, a long printer cable RS-232 interface or a network coax cable shield connected between different processing system components experience differences in ground reference voltages.

The ground referencing problem scenario has two critical factors to look for. First, it occurs where one component, such as the printer, is ground referenced to another system component, such as the PC, via data line. Second, the electronic components in this scenario are fed by different branch circuits or from different points in the power system, as shown in Figure 3-6. The data cable link may have either one or both ends of the cables grounded to the equipment chassis. With both ends grounded, transient or steady currents will flow on the link. With only one end connected, transient or steady voltages appear at the open terminal.

These conditions sometimes cause data-transfer problems during transient events such as surge currents or voltages in ground conductors. Typical equipment symptoms of a referencing problem are temporary data hangs, slowdown of data transfer, multiple retries and permanent lockups, or in the worst case, I/O damage. However, susceptibility varies between electronic equipment models and designs because of differences in upset thresholds, dependence on stable ground reference, and degrees of data line isolation.

 Copyright © 2006 IEEE. All rights reserved.

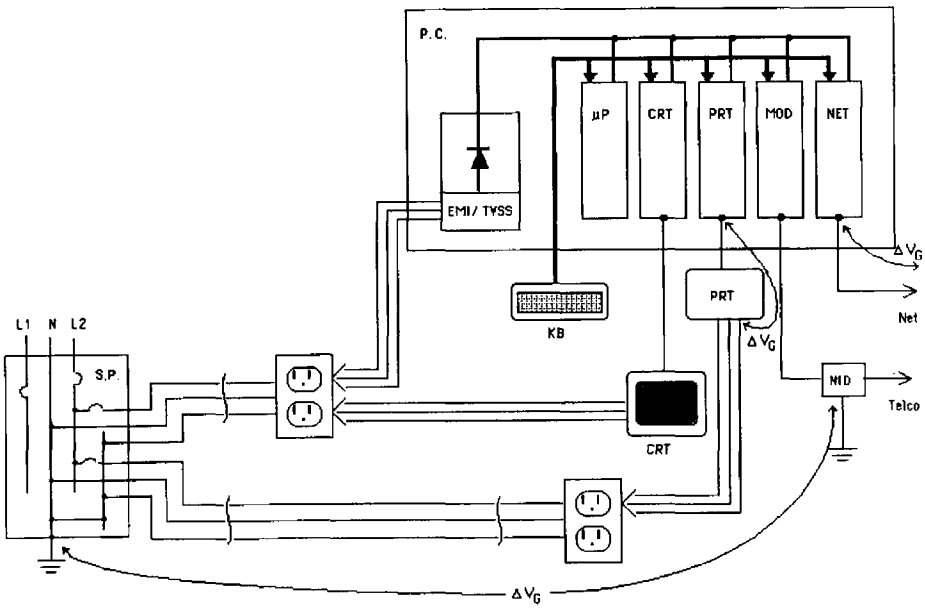

Figure 3-6—CPU and peripheral interfaces with various wiring and circuit reference grounding paths

Site conditions that may lead to ground referencing problems in an electronic processing system are:

a) Long data cables, e.g., RS-232 longer than 8 m (25 ft), and coax and twisted pair longer than 30 m (100 ft).

b) Long distances from a common power reference, e.g., when any of the components (servers, printers, or PCs) are on a different branch circuit, different power panel, or in the worst case, a different power service entrance.

c) Exposure to transient currents in nearby conductors (which induce current transients when the cable shield is connected at both ends and voltage transients when the cable shield is connected at only one end).

3.3.4 Difficult installation scenario 2—A single electronic component has connections to more than one external utility system

In this arrangement, the trouble is that one electronic component (such as a modem or PC) is referenced to more than one external system and may experience transient voltages and currents between these systems. Typical external system connections include electric power, telephone, cable TV, and local area networks. These separate utility systems are difficult to maintain at the same voltage level, especially if they are grounded at different locations and enter the building or equipment area from different sides. This condition invites exposure to upsetting or damaging transient voltage problems.

The typical symptoms are slowdown of data transfer, retry, lockup, and even damage of exposed I/O components. Key variables that will determine the likelihood of transient overvoltage problems are as follows:

a) How far apart the different systems enter the building or area in the building where the processing system is located

b) How effectively the different systems' ground references are bonded together

Figure 3-7 shows the typical example of exposure to transient voltages for a fax machine connected to the telephone system.

Copyright © 2006 IEEE. All rights reserved.

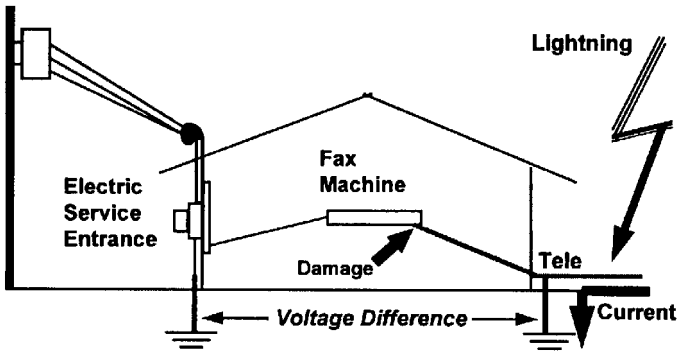

Figure 3-7—Impact of transient voltage surge in the telephone system on a fax machine

If the power line surge momentarily raises the fax machine tip or ring reference level, then the entire surge voltage may appear between the telephone line interface and the power cord of the fax. Signal interference or tuner damage may be expected. An isolated/insulated grounding (IG) circuit is not going to help in this scenario because it does nothing to equalize voltages between different system interfaces with equipment. In fact, an IG is likely to exaggerate this problem by eliminating local ground bonds.

Transient upset or damage problems also can occur when a data modem is connected to the local telephone and power systems. The telephone jack input to the modem becomes the point where the two utility systems come together. This interface may experience a large voltage difference between the two utility systems when a surge current is induced in one of the utility systems and not in the other. Such transient potential differences can be equalized by referencing all external conductors to the same ground window.

3.3.5 Difficult installation scenario 3—An electronic processing system with power, data, or control cables exposed to stray currents

In this scenario, the trouble occurs when several different processing system components (i.e., a computer, a printer, a data network, a server) are physically separated, but interconnected by various data cables, and may be fed by different branch circuits of the same electric power system. This arrangement may be vulnerable to stray currents in power or data lines, which enter via bonding of power grounds or the connection of data cable grounds and cable shields. For example, an RS-232 printer interface cable or the shields of network coax cables are grounded at both ends. Also the grounding conductors of power circuits are bonded to metal enclosures and the building grounding electrode system. Here bonding may promote a stray current problem.

Stray ground currents and common-mode electrical noise between components of the system cause either voltage differences or EMI of data communications. Stray currents are more likely to occur when branch circuits feed a variety of electronic and other equipment, and there is little or no control over the type and condition of the other equipment sharing the circuits. Symptoms that may be observed when these conditions exist are seemingly random electronic process or data transfer upsets, particularly in digital-based rather than analog-based systems.

3.3.5.1 Stray currents and voltages related to isolated/insulated grounding techniques

To recognize the presence of stray ground currents and related voltages, look for symptoms. Stray ground currents usually exceed the normal mA-level leakage on the ground conductor expected from various connected load equipment. When these currents flow, the normal wiring impedance leads to stray voltages. Conditions that cause stray currents are sometimes transient (as opposed to continuous). For example, stray ground currents come from an ESD to a metal enclosure, faults in wiring or equipment, and capacitive coupling from nearby circuits when equipment is energized or a surge current is in the area. However,

 Copyright © 2006 IEEE. All rights reserved.

miswiring in building electrical circuits or inside connected equipment is probably the most common cause of stray ground currents.

Typical wiring errors that allow stray ground currents. Wiring errors such as neutral-to-ground bonds in subpanels, neutral-ground reversals in receptacles, or miswiring in equipment are a common cause of stray currents. A neutral conductor that is inadvertently grounded downstream of the main disconnect will allow normal currents to stray into the ground system as shown in Error 1 of Figure 3-8. Error 2 describes another source of stray current from a neutral-to-ground reversal wiring error in an electric outlet. Sometimes wiring errors or component breakdown occurs inside individual load equipment, such as an inadvertent neutral-ground connection. This connection, which can cause stray ground currents, is pointed out in Figure 3-8.

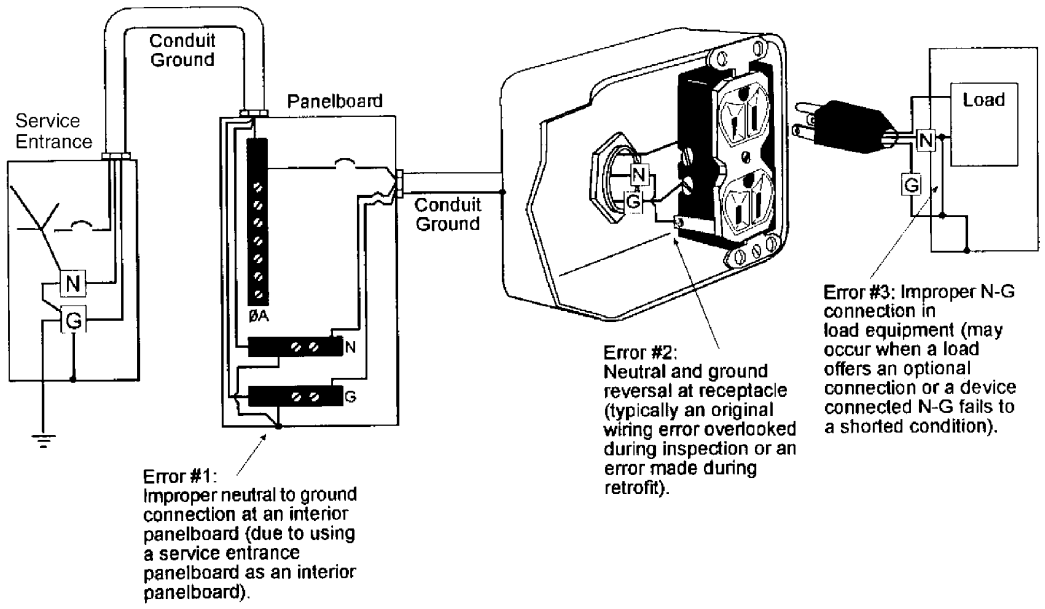

Figure 3-8—Typical wiring errors on a branch circuit

Stray ground currents are intermittent currents in the green wire that exceed the normal mA leakage current expected from various connected load equipment. These currents are common in virtually every power system and can occur under a variety of conditions, many of which are transient (as opposed to continuous). For example, stray ground currents may come from an ESD to enclosures, short circuits in wiring or equipment, and capacitive coupling from nearby circuits when equipment is energized or a surge is produced. However, miswiring in building circuits or in connected equipment is probably the most common cause. A neutral conductor that is inadvertently grounded downstream of the main disconnect will allow normal currents to stray.

These stray currents in the EGC or ground reference path can cause variations in the ground potential levels throughout the equipment grounding system. Inadvertent neutral-to-ground bonds or neutral-ground reversal wiring errors are probably the most common cause of stray currents. Suspect stray ground currents or EMI when you have these wiring conditions exist and symptoms of electronic processing upsets are observed, particularly in digital-based rather than analog-based data systems. For example, when random upsets in existing electronic processing systems are occurring, branch circuits feed a variety of electronic and other equipment loads, and there is little or no control over the type and condition of the other loads sharing the circuit.

Copyright © 2006 IEEE. All rights reserved.

3.4 Protection of susceptible equipment

3.4.1 General information

The concept of protection implies preventing a hostile environment from affecting susceptible equipment. Protection of the equipment against the hostile environment is the goal of the technology of electromagnetic compatibility (EMC). Discussing the need for protection, therefore, takes on two aspects: characterizing the environment and characterizing the susceptibility of the equipment. Disturbances to the environment have been briefly discussed in the preceding subclauses. More complete descriptions can be found in other IEEE standards, such as IEEE Std 519™, IEEE Std 1159, and IEEE Std C62.41.

One aspect that many protection strategies do not address is the significance of the rate of change in voltage disturbances. This rate of change is important in two aspects:

a) A fast rate of change has greater capability of producing a disturbance in adjacent circuits by capacitive and inductive coupling, and

b) A slow rate of change can make ineffective a protective device based on inserting a series inductance in the power line.

Detailed analysis of the rate-of-change issue is beyond the scope of this chapter, but Figure 3-9 takes the concept one step further in identifying the issues.

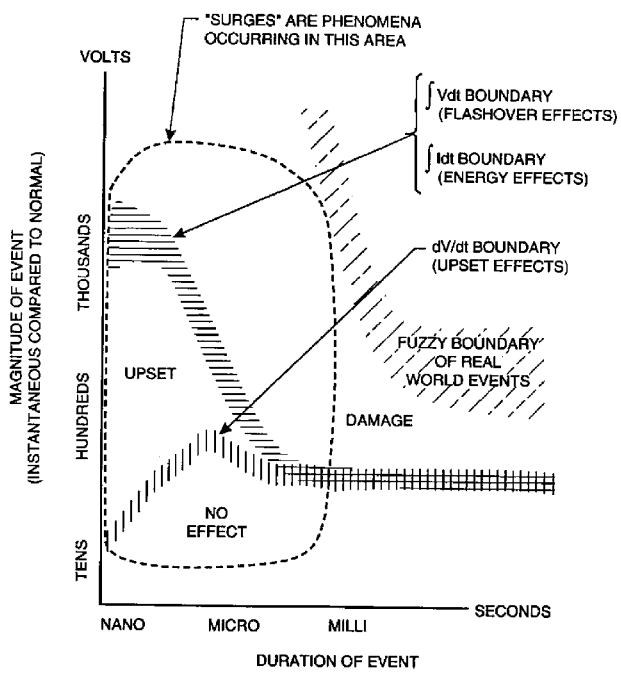

Figure 3-9—Relationship between disturbance characteristics and their effects on equipment

3.4.2 Noise protection

Noise on the power line is generally understood as a disturbance of low amplitude, a small fraction of the system voltage (and high frequency relative to the power system), while a surge on the power line is generally understood as a disturbance of larger fraction or a multiple of the system voltage. The boundary between the two phenomena is not clear, and documents prepared by groups of different backgrounds and interests can vary on the definition of this boundary. Noise effects are often lumped under the label of EMI

 Copyright © 2006 IEEE. All rights reserved.

and addressed by frequency-domain-oriented specialists. Surge effects are generally addressed by time-domain-oriented specialists more concerned with damaging effects than upset effects. These different points of view are also reflected in Figure 3-9. IEEE Std 518™, Morrison [B18], and Ott [B19] provide comprehensive discussions of noise reduction practices.

3.4.3 Surge protection

Surges can have many effects on equipment, ranging from no detectable effect to complete destruction. In general, electromechanical devices withstand voltage surges until a dielectric breakdown occurs, while electronic devices can have their operation upset before hard failure occurs. At intermediate levels, progressively more intense upset occurs until breakdown takes place. The semiconductor junctions of electronic devices are particularly susceptible to progressive deterioration. Definitions of the level beyond which a transient overvoltage becomes a threat depend on the type of victim equipment. While electromechanical devices can generally tolerate voltages of several times their rating for short durations, few solid-state devices can tolerate much more than twice their normal rating. Furthermore, data processing equipment can be affected by fast changes in voltage with relatively small amplitude compared to the hardware-damaging overvoltages.

The issue of survival or undisturbed operation of the equipment can be attacked in three ways: eradication of the cause of surges (e.g., the elimination of lightning); building equipment immune to any level of surges, no matter how high; or the obvious choice, finding the best economic trade-off. Moderate surge-withstand capability is built into equipment, and the worst surges occurring in the environment are reduced, by application of suitable protective devices, to a level that the equipment can tolerate (see IEEE Surge Protection Standards Collection [B10]).

Low-voltage, end-user-type SPDs are often described as *transient suppressors*, but their operation is really a diversion of the surge current through a low-impedance path preventing the rise of high voltages across the load terminals. For large surge currents, this diversion is best accomplished in several stages. The first diversion should be performed at the entrance to the building, typically by conventional surge arresters rated for this duty. Then, any residual voltage resulting from the action of the arrester can be dealt with by a second protective device at the power panel of the computer room, or at the terminals of a connected load, or both. In this manner, the wiring inside the building is not required to carry the large surge current to and from the diverter at the end of a branch circuit. Such a long path for the current would produce inductive voltage drops in the branch circuit wires, resulting in a rise of the neutral or grounding conductor terminals with respect to local grounds. A potential problem, however, is associated with the multistage protection scheme; if not properly coordinated, a downstream protective device may attempt to divert all of the impinging surge and fail in the process. Thus, proper attention must be given to coordination of cascaded SPDs (see Martzloff [B14]). Additionally, proper attention must be given to insuring that surge protection on the power port is coordinated with the surge protective devices (SPDs) on all other ports of entry to the equipment, such as modems, network cables, and printer cables.

3.4.4 Sag protection

Sag protection consists of providing some source of voltage to make up for the momentary loss of input voltage. Sag protection can vary from short ride-through provided by added capacitance to a full UPS system (see 7.2.8, 7.2.9, IEEE Std 446, and IEEE Std 1346™ for more information). A more detailed discussion of sag immunity testing is given in 3.5.1.2.

Copyright © 2006 IEEE. All rights reserved.

3.5 Information technology equipment (ITE)

3.5.1 Powering ITE

The powering requirements for common office equipment such as personal computers, fax machines, copiers, alarm systems, as well as a wide assortment of consumer electronics products fall into a range such as ±10%. All of these devices typically have some level of built-in immunity to voltage variations, which can be defined by power quality performance testing to define what is commonly referred to as the CBEMA-type curve or profile for the device under test. A CBEMA curve approach is simply the application of a two-dimensional grid to plot the input voltage vs. time duration performance of any electronic appliance. These plots are a useful way to compare the power quality performance of different electronic products. In effect, this is the input vs. output energy performance for that product (or power supply) because we are comparing the amount of input energy (either high, low, or nominal) to the ability of the power supply to support its output load without interference or upset.

The classic example of this approach is the switch-mode power supply that is found in modern single-phase electronic products. The front end of the power supply is a bridge rectifier with a bulk capacitor for energy storage. The input ac is converted to a dc voltage that is in turn stepped down or converted to the appropriate dc voltages required by the output loads. Monitoring this output load voltage for "out of limits" deviations, while injecting sags, swells, transients, interruptions, and steady-state voltage variations at the input terminals to the power supply yields the input voltage vs. duration performance plot referred to as that product's *CBEMA-type curve.*

The susceptibility level of the equipment, however, is a subject that is more difficult to quantify because it requires the disclosure by manufacturers of information that some are reluctant to provide, lest it be misunderstood or misused. Nevertheless, the consensus process has produced a useful graph of typical susceptibility levels—or the converse, tolerance levels for single-phase equipment such as personal computers, copiers, fax machines, and other ITE devices. This graph has been widely published, but has been recently revised to more accurately reflect the tolerance capabilities of the aforementioned equipment, and is reproduced here as Figure 3-10. Note that the graph only addresses the magnitude of the voltage, with a corresponding duration.

Part (a) of Figure 3-11 shows an example of power supply ride through a voltage sag, and part (b) of Figure 3-11 shows an example of power supply ride through a voltage interruption. The input voltage drops to zero, and several cycles later, the output dc bus begins to drop. For this case, one data point would be plotted at 0 V and 5 cycles, which is the point where the dc bus dropped from 5 V to 4.75 V. The arbitrary pass/fail criteria selected here is –5% of nominal or 4.75 V dc for the 5 V dc bus, which is a level specified in many digital logic data books as the lower limit for guaranteed performance of a given logic chip. Similarly, by injecting other high- and low-voltage events at the power supply input terminal, and monitoring a low- or high-output threshold, enough data points may be gathered to fill in or plot the CBEMA-type curve for the example switch-mode power supply.

If the product being tested were an adjustable-speed drive (ASD) instead of a PC power supply, some other arbitrary pass/fail criteria would have to be selected. In the ASD case, this could possibly be the speed in RPM of the output motor. Because there is such a wide diversity in pass/fail performance criteria that may be selected for a given product or a given process, it is important to emphasize that the new CBEMA curve shown in Figure 3-10 is intended for single-phase ITE and is not intended to reflect the performance of all electronic-based equipment. There are simply too many variables, such as power supply loading, nominal operating voltage level, and process complexity, to try to apply a "one size fits all" CBEMA curve.

3.5.1.1 History of the CBEMA curve

The origination of the CBEMA curve goes back to 1977 when the Computer and Business Equipment Manufacturers Association's (CBEMA) ESC-3 Working Group was asked to provide their input into an

 Copyright © 2006 IEEE. All rights reserved.

energy performance profile for computer equipment that was proposed for publication in IEEE Std 446. After some minor modifications to the proposal, the ESC-3 Working Group approved this initial version of the curve, which remained unchanged until early in 1996. Throughout the nearly 20 years that the original version was published, it grew in stature from a simple curve describing the performance of mainframe computer equipment (PCs were not available), to a curve that was used to attempt to define everything from specification criteria for electronic equipment to the basis of power quality performance contracts between electric utilities and large industrial customers. Obviously this is quite an extension from the initial intent of describing the power quality performance of typical mainframe computers.

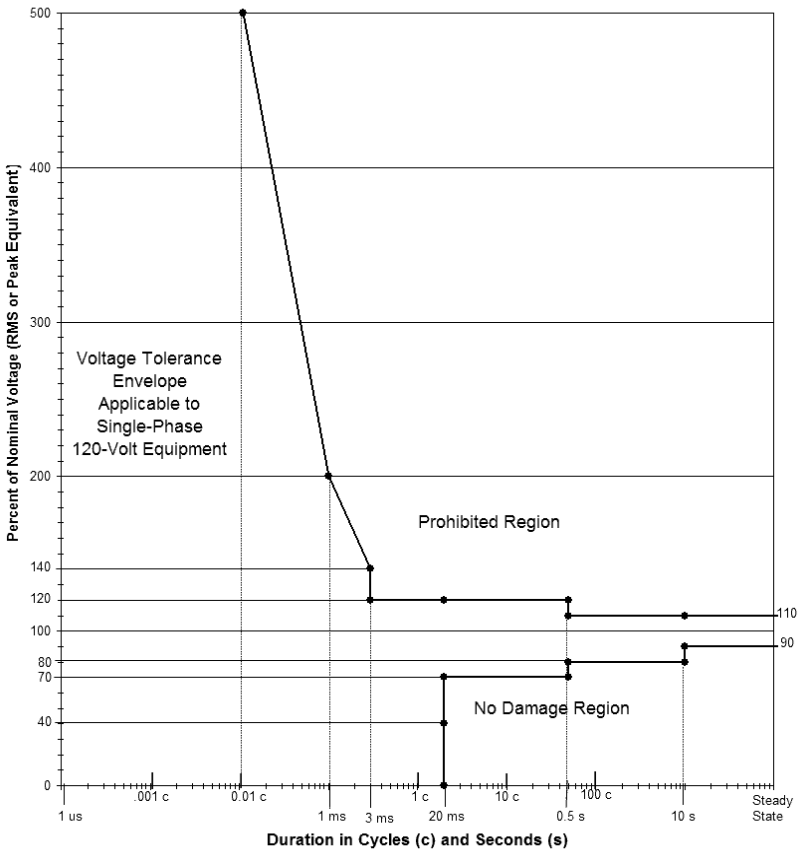

Figure 3-10—New ITI (CBEMA) curve (2000)

Because of this elevated stature, the ESC-3 Working Group and several sponsors took on the task of developing a curve revision that would be more representative of the power quality performance of modern PCs and other ITE. The basis of this new curve is supported by tests that were conducted on a representative sample of eight PC power supplies supplied by eight different manufacturers. Armed with performance knowledge from the PC power supply test results and some very insightful product performance input from the ESC-3 Working Group, a new curve was defined that was more in line with the expected performance of modern electronic equipment. This new CBEMA curve is shown in Figure 3-10. There is not much curvature to the new performance envelope, but it will continue to be officially referred to as the *CBEMA curve* with a footnote stating that it was revised in 2000 by the Information Technology Industry Council (ITI), formerly the CBEMA. The ITI is the new international representative of the ITE manufacturers.

Copyright © 2006 IEEE. All rights reserved.

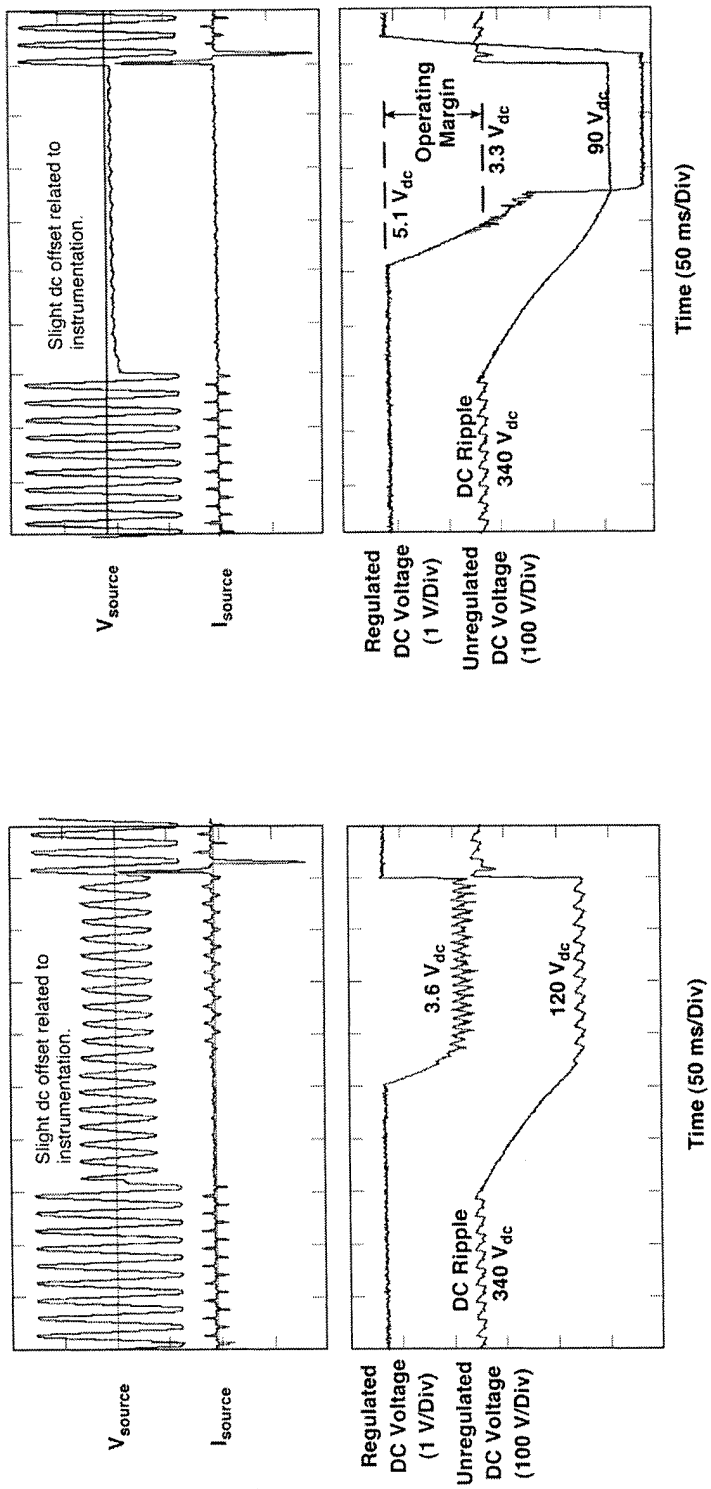

Figure 3-11—Example performance of a switch-mode power supply 5 V dc bus during a momentary event

 Copyright © 2006 IEEE. All rights reserved.

3.5.1.2 Testing equipment to the new CBEMA limits

Because this new CBEMA curve has some carefully negotiated data points, each of these points may be useful as criteria to test the performance of a given product. The description of how to test to these points has been developed.

In general, testing on the rms portion of the curve is to be performed with nominal line voltage applied to the power supply. For example, to determine whether a given product can withstand an interruption of 20 ms without upset, power is removed from the unit under test and the output is monitored to determine whether or not that particular unit's output remains unaffected for at least 20 ms. Similarly, the data point at 70%-0.5 s can be evaluated by sagging the input to 70% of nominal for 0.5 s and then bringing the input back to normal. If the output is unaffected, then the product has met the criteria for this data point. It should be noted that the sag to 70% may last longer than 0.5 s, but if the output is not affected until sometime after 0.5 s, then the product has met the limit described by the new CBEMA curve.

On the high-voltage side of the curve, the testing is slightly more difficult because a transient surge generator and an amplifier are required to test for the data points to the left of, and including, the 3 ms duration point. A surge generator is used to inject IEEE Std C62.41 and IEEE Std C62.45™-2002 [B11] defined "combination wave" transients [x] to determine if the product is upset by a transient surge with an amplitude 500% of the nominal peak voltage (850 V_{peak} for a 170 V nominal peak-rated product). The transient is applied at the 90° peak of the nominal waveform or may be applied at other phase angles if desired. For the data point at 200%-1 ms, an amplifier is used to simulate a capacitor-switching transient waveform. The amplitude of this waveform would be 340 V (2 times peak) measured from zero to peak if the unit under test is rated 120 V rms. The initial ringing frequency (*f*) for this transient is determined by Equation (3.1):

$$(1) f = 1/t \tag{3.1}$$

where *t* is time (in seconds).

This yields a frequency of 1 kHz when we plug in 1 ms for time. An example of the 200%-1 ms capacitor-switching transient is shown in Figure 3-12.

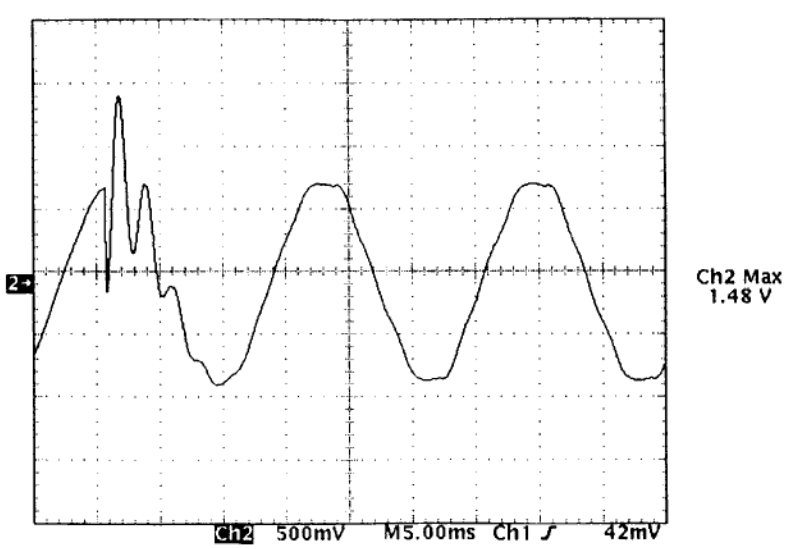

Reprinted with permission from Dorr [B3].

Figure 3-12—Sample capacitor-switching oscillatory transient

Copyright © 2006 IEEE. All rights reserved.

Similarly, the data point at 140%-3 ms is tested with a capacitor-switching waveform having a zero to peak magnitude 1.4 times the nominal voltage peak and an initial ring frequency of approximately 330 Hz. All points to the right of the 3 ms mark can be tested in a manner identical to the testing described for the low-voltage points, with the exception that a swell or overvoltage is applied for the prescribed duration.

3.5.1.3 Evaluation of what the new CBEMA curve covers

Even with the new look, a CBEMA-type criteria has some important limitations. It is not in itself sufficient criteria for typical office systems. This subclause identifies what should be expected and what cannot be obtained from a CBEMA-type criteria.

Most modern commercial buildings have a large amount of electronic data processing equipment or ITE. This equipment is usually interconnected to form business-critical information technology (IT) systems. Often some sort of network links users internally and provides a window for communication with the outside world. For these systems to operate trouble free in their electrical environment, the following three criteria should be met:

a) Power should be provided continuously and with adequate quality

b) Data links should operate as intended, without noise-related interference

c) Reference grounds should be at equal potentials and free of transient voltage shifts

A weak point in any one of these areas of the electrical environment will compromise the IT system's immunity.

The CBEMA curve addresses most of criterion a), excluding noise immunity. This criterion is referred to as the *energy delivery criterion.* It is the voltage levels and durations at the equipment terminals that represent acceptable energy delivered by the power system. For example, during a short-duration, low-rms event, or sag, the CBEMA curve limit tells us the time available before the ITE has insufficient energy to operate. At zero voltage, or outage, the curve shows the ITE ride-through time, when no energy is delivered. A high voltage for a short period of time, less than 10 ms, gives the ITE peak voltage limit, indicating too much energy. For longer time periods, both the overvoltage and undervoltage limits of the curve indicate required rms voltage regulation, or "criteria for the wrong potential energy." These energy-related criteria are covered well by the new CBEMA curve.

In contrast, criterion b) is not related to energy, and here the CBEMA curve has only indirect relevance. This *data transfer criterion* is concerned with the performance of data links and interactions between power and data lines. For example, the CBEMA surge voltage withstand is shown to be quite high at the ITE terminals, perhaps hundreds or even thousands of volts peak. When these same surges are somehow coupled into data lines, a greatly reduced immunity is anticipated. It may be said that the back door, or communication port entry, represents an increased susceptibility not depicted by a power port-oriented CBEMA curve.

Likewise, criterion c), referred to as *equal references*, may also bring a vulnerability level to the IT system not depicted by the CBEMA. Considering two typical scenarios, a printer may be ground referenced to a different point than the central processing unit (CPU) driving it, or power to a modem may be referenced to a different point than its telephone service input. Criteria for ground referencing or equalizing potential differences between grounds do not show on the energy-related CBEMA curve. Yet a few volts induced by an otherwise harmless power line surge may halt data transfer or damage an I/O interface.

So it can be seen that the latest CBEMA curve is necessary, but is only a partial picture of the required immunity limits in modern office electronic systems. It provides a very useful energy- and power-interface criteria. However, more work is needed to define other criteria for the complete system, particularly for multiport ITE and their interconnecting networks.

 Copyright © 2006 IEEE. All rights reserved.

3.5.1.4 Other industry ride-through standards

The ITI curve is just one example of efforts by an industry to immunize equipment against certain types of electric power fluctuations. SEMI F47-0200-2000 [B22] defines the threshold that a semiconductor tool must operate without interruption (per SEMI S10-1103-1997 [B23]) and it also provides a target for the facility and utility systems. Recognizing semiconductor factories require high levels of power quality due to the sensitivity of equipment and process controls and that semiconductor processing equipment is especially vulnerable to voltage sags, SEMI F47-0200-2000 defines the voltage sag ride-through capability required for semiconductor processing, metrology, and automated test equipment.

The requirements in this international standard were developed to satisfy semiconductor industry needs. While more stringent than existing generic standards, this industry-specific specification is not in conflict with known generic equipment regulations from other regions or generic equipment standards from other organizations. It is the intent of SEMI F47-0200-2000 [B22] to provide specifications for semiconductor processing equipment that will lead to improved selection criteria for subcomponents and improvements in equipment systems design. While it is recognized that in certain extreme cases or for specific functions battery storage devices may be appropriate, it is not the intent of this standard to increase the size or use of battery storage devices provided with equipment. Focus on improvements in equipment component and system design should lead to a reduction or elimination in the use of battery storage devices to achieve equipment reliability during voltage sag events.

SEMI F47-0200-2000 [B22] specifies the minimum voltage sag ride-through capability design requirements for equipment used in the semiconductor industry. The expected equipment performance capability is shown graphically on a chart representing voltage sag duration and percent deviation of equipment nominal voltage.

The actual SEMI F47-0200 ride-through curve is shown in Figure 3-13.

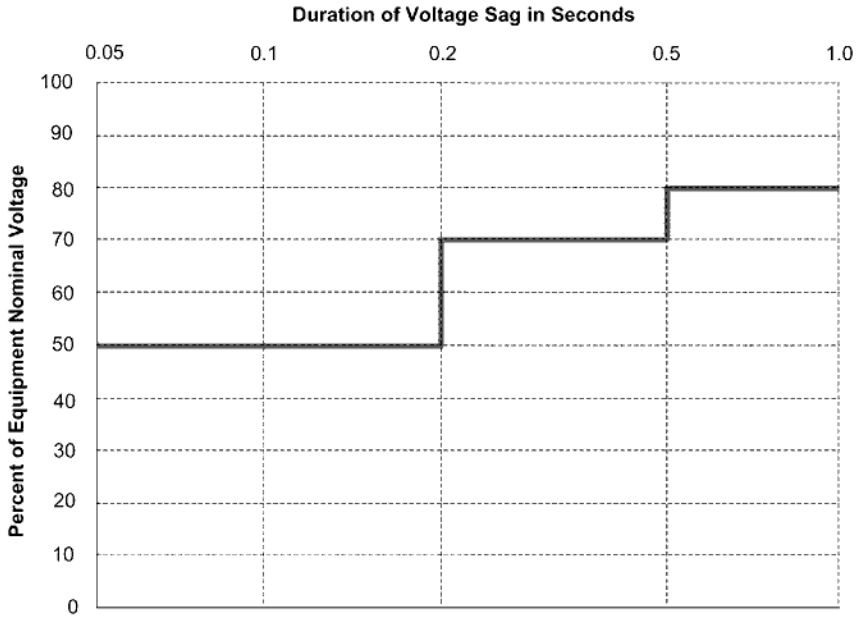

We publish with permission from Semiconductor Equipment and Materials International, Inc. (SEMI) © 2005.

Figure 3-13—Voltage sag ride-through curve from SEMI F47-0200-2000 [B22]

Copyright © 2006 IEEE. All rights reserved.

The specification simply states that semiconductor processing, metrology, and automated test equipment must be designed and built to conform to the voltage sag ride-through capability per the defined curve. Equipment must continue to operate without interrupt (per SEMI E10-0304E-1996 [B21]) during conditions identified in the area above the defined line. In the context of SEMI E10-0304E-1996, interrupt means any assist or failure. An assist is defined as an unplanned interruption that occurs during an equipment cycle where all three of the following conditions apply:

a) The interrupted equipment cycle is resumed through external intervention (e.g., by an operator or user, either human or host computer).

b) There is no replacement of a part, other than specified consumables.

c) There is no further variation from specification of equipment operation.

Furthermore, a failure is any unplanned interruption or variance from the specifications of equipment operation other than assists. Although no variation in the tool's process is the goal, SEMI F47-0200-2000 [B22] addresses these issues as related to the equipment operation only. Since the process effect of such disturbances is tool specific and is in the venue of the tool supplier, it was beyond the task force's scope of work.

3.5.2 Grounding ITE

All equipment incorporating at least two ports is classified under IT systems: a data port for input and output of signals, and a power supply port. The data port can be linked to the public telephone network, to a dedicated terminal, or to a communications bus or system. The significant aspect of such equipment is its two-port configuration; in many instances, the power port design and connections are regulated by one set of standards, while the data port is regulated by another set of standards, if any.

Safety aspects of grounding practices are fulfilled with no conflict by power system designers. On the other hand, designers of IT systems may have different criteria or practices from those of the power system designers. Signal circuits are not always grounded by a low (zero) impedance bond to their equipment (chassis, enclosure) ground. Some of these systems use a reference that is grounded. Others use balanced pairs that may or may not carry their own ground reference. However, at the high frequencies associated with disturbances, all circuits are capacitively coupled to ground and to adjacent circuits. Therefore, noise can be injected in these data circuits by power system ground or fault currents, by EMI from other systems or lightning, and by other sources. Remedies to noise problems proposed by IT specialists are sometimes at variance with the requirements for effective grounding from the point of view of power system faults or lightning current protection.

One especially troublesome problem is that of systems featuring several elements in different locations, powered from different branch circuits, but linked by a data cable that carries its own zero reference—a conductor linking the grounding connections in the different locations. Under moderate conditions, the ground loop thus formed can couple noise into the signal path. Under more severe conditions, such as a power system fault or a surge being diverted through the grounding conductors, substantial differences can exist between the "ground" potential of two distant elements of the system; this difference in potential can cause component failures in the circuits.

3.6 Shielded, filtered, enclosed EMI/EMC areas

3.6.1 General information

EMI/EMC requirements are intended to limit the spurious emissions given off by electronic equipment and to ensure that electronic equipment is not adversely affected by such emissions. Typical EMI/EMC requirements are contained in CFR Title 47, Telecommunications [B2] or in documents promulgated by Technical Committee 77 (Electromagnetic Compatibility) of the International Electrotechnical Commission

 Copyright © 2006 IEEE. All rights reserved.

(IEC). The requirements implied by TEMPEST have different motivations. TEMPEST is a government term referring to the concerns over compromising emanations from any information processing equipment. Many years ago, Department of Defense personnel learned that it is possible to intercept the radio emissions given off by electronic equipment and that, with the aid of computers, classified information could be extracted from these signals by unauthorized parties. As the use of computers has become more commonplace in the office and the "decoding" business, the probability of such interceptions has increased.

TEMPEST requirements are usually achieved by placing a shielded enclosure around the equipment emanating the compromising signal. EMC requirements are achieved the same way. This metal enclosure reflects or absorbs the signals and attenuates them to an undetectable level. In recent years, TEMPEST interest has increased in nongovernmental agencies. Some computer manufacturers now offer TEMPEST shielded computers and peripherals for commercial use.

3.6.2 Electrical safety requirements

Shielding hardware and power distribution systems designed to meet the objectives of EMI/EMC and TEMPEST must always meet the requirements of the NEC). In particular, the grounding and bonding of shields and associated components must comply with Article 250 of the NEC. Distribution systems and equipment within the shielded area are bonded to the interior of the shield while the outside of the shield is bonded to the facility grounding system (see MIL-HDBK-419 [B16]). Although this external connection has little or no effect on the equipment within the shield, it is essential to prevent the enclosure from reaching dangerous potentials relative to its surroundings.

3.6.3 Other requirements

A Faraday cage that provides an electromagnetic and radio-frequency shield enveloping the equipment to be protected best describes the basic requirements of EMI/EMC and TEMPEST. This shield isolates the protected circuits from spurious external signals and also attenuates TEMPEST emanations to levels that are too small to be intercepted or analyzed. To be usable, this shield must have penetrations for personnel and equipment access, power lines, control cables, and ventilation. The number of shield penetrations must be held to a minimum since each penetration is a potential leakage source and will require additional maintenance. For those penetrations that cannot be eliminated, proper construction to eliminate leaks is essential. Also, equipment and hardware installed within the shielded area must comply with EMI/ EMC requirements in order to tolerate any residual internal electromagnetic fields. Topological grounding methods should also be employed. That is, each shielded region (topological zone) should have a separate grounding system making contact with both the inner and outer shield defining the zone (see Graf and Nanevicz [B8]). For more information on shielded areas, see MIL-HDBK-419 [B16] and MIL-STD-188/ 124 [B17].

3.7 Safety systems

Safety systems protect life and property from damage or loss due to accidents. For equipment, the degree of protection should be based on the value and criticality of the facility. Personnel safety is covered rigorously in the NEC and many other standards. Defining this degree requires an in-depth knowledge of the installation and its function. The following questions should be considered when designing these systems:

a) How long will it take to replace the equipment and at what cost?
b) Can the function of the facility be performed elsewhere?
c) Loss of what key component would result in operation interruptions?

Safety systems can be as simple as a manually operated emergency power-off button, or as complex as a fully interlocked system. However, the more complex a fully integrated system becomes, the higher the probability of system confusion or failure. Typical systems include the following functions:

Copyright © 2006 IEEE. All rights reserved.

1) Smoke and fire protection
2) Environmental control
3) Smoke exhaust
4) Fire extinguishing
5) Emergency lighting
6) Security

The interfacing of a safety system is generally unique for each installation and requires a logical design approach. Through a well-defined logic matrix and sequence priorities, it is possible to develop a system that can be maintained, modified, or expanded with little confusion and minimum expense.

Generally, safety systems operate from 120 V ac, 24 V ac, or 24 V and 12 V dc. In any case, these systems must remain powered at all times. The quality of the power supplied to these systems is as important as that of the power delivered to the IT system. Disturbances in the power supply of the safety system can cause shutdown of the protected system.

3.8 Coordination with other codes, standards, and agencies

3.8.1 General information

There is a large body of guidelines, standards, and codes that address the issues of power quality, safety, and operational integrity of a power system and its connected equipment. These documents are prepared by diverse organizations, including voluntary consensus standards such as the IEEE documents, national position standards such as the recommendations of the IEC, safety standards such as those of the Underwriters Laboratories (UL), performance standards prepared by users' organizations, interchangeable standards prepared by manufacturers trade organizations, and regulatory standards promulgated by local and national agencies.

While conflicts are not intended among these documents, the wide diversity of needs and points of view unavoidably create ambiguities at best and conflicts at worst. As indicated earlier, however, the safety and legal aspects of any conflict mandate a prevailing role for the NEC.

3.8.2 National Electrical Code

The NEC is a document prepared by consensus of a number of panels where national experts develop a set of specific and detailed requirements. These requirements are based on long-established practices, complemented by a permanent review process with a 3-year cycle. The NEC is generally adopted by local jurisdictions, either in its entirety or with some modifications, and thus becomes enforceable by local inspection authorities. Conspicuous exceptions exist, however, in the domain of application: the power generation and distribution facilities of electric utilities are not regulated by the NEC, but have their own safety standards; U.S. government facilities are not regulated by the NEC, although installations are generally made in accordance with the NEC; some jurisdictions, notably large cities in the U.S., have their own local codes that are usually based on the NEC with additional requirements.

3.8.3 Underwriters Laboratories standards

UL is an independent, not-for-profit organization operating in the field of public safety. It operates product safety certification programs to determine that manufactured materials and products produced under these programs are reasonably safeguarded against foreseeable hazards. UL publishes standards, product directories, and other information. Approximately 500 published standards now exist. These standards are generally recognized by inspection authorities in the U.S. Note, however, that there are other competent testing agencies that can conduct certification programs based upon UL standards.

 Copyright © 2006 IEEE. All rights reserved.

3.8.4 Other laboratories and testing agencies

Other laboratories and testing agencies have also performed tests on equipment, for the purpose of listing or for providing an independent verification of performance. The Occupational Safety and Health Administration (OSHA) requires listing by a Nationally Recognized Testing Laboratory (NRTL).[3]

3.8.5 National Electrical Manufacturers Association (NEMA) standards

NEMA develops product standards, some of which are recognized as Accredited Standards Committee standards. These standards are generally concerned with equipment interchangeability, but also contain documentation on operation and safety features.

3.8.6 National Institute of Standards and Technology (NIST)

NIST (formerly the National Bureau of Standards) is a U.S. government agency established initially for the purpose of maintaining standards of measurements and calibration of instruments, including tractability. Over the years, the role of NIST has expanded to include a broad range of research activities. The staff of NIST is active in many standards writing groups, through individual contributions of experts in each specific field. However, NIST does not promulgate standards in the meaning of documents such as IEEE, IEC, or American National Standards Institute (ANSI) standards.

3.8.7 International standards

International standards are developed by a different process than the typical voluntary standard process used in the U.S., as exemplified by the present book. The prevalent set of standards is developed by the IEC and covers most of the engineering and application aspects of electromechanical and electronic equipment. Technical Committees involved in the development of documents related to power and grounding include the following:

a) Technical Subcommittee 28A, for insulation coordination concerns. A report prepared by this subcommittee (IEC 60664-1) discusses in detail an approach whereby overvoltage categories would be assigned to various types of equipment. The overvoltage capability of the equipment would become part of the equipment nameplate information, ensuring proper installation in known environments.

b) Technical Committee 64, for fixed (premises) wiring considerations.

c) Technical Committee 65 WG4, for EMC of industrial process control equipment. This working group has produced and continues to update a family of documents addressing surge immunity, fast transients, and ESDs (IEC 6100-4-1).

d) Technical Committee 77, for EMC. Within the broad scope of all possible disturbances to EMC, this committee is developing documents related to conducted disturbances. These documents are generic descriptions and classifications of the environment, leading to the specification of immunity tests in general. Detailed test specifications for a given equipment are left to the relevant product committee.

[3]A listing of NRTLs can be found on http://www.osha.gov/dts/otpca/nrtl/index.html.

Copyright © 2006 IEEE. All rights reserved.

3.9 Normative references

The following referenced documents are indispensable for the application of this recommended practice. For dated references, only the edition cited applies. For undated references, the latest edition of the referenced document (including any amendments or corrigenda) applies.

IEC 60664-1, Insulation Coordination for Equipment within Low-voltage Systems—Part 1: Principles, Requirements, and Tests.[4]

IEC 61000-4-1, Electromagnetic Compatibility (EMC)—Part 4-1: Testing and Measurement Techniques—Overview of IEC 61000-4 Series.

IEEE Std 141, IEEE Recommended Practice for Electrical Power Distribution for Industrial Plants (*IEEE Red Book*™).[5,6]

IEEE Std 142, IEEE Recommended Practice for Grounding of Industrial and Commercial Power Systems (*IEEE Green Book*™).

IEEE Std 446, IEEE Recommended Practice for Emergency and Standby Power Systems for Industrial and Commercial Applications (*IEEE Orange Book*™).

IEEE Std 518, IEEE Guide for the Installation of Electrical Equipment to Minimize Electrical Noise Inputs to Controllers from External Sources.[7]

IEEE Std 519, IEEE Recommended Practices and Requirements for Harmonic Control in Electrical Power Systems.

IEEE Std 1159, IEEE Recommended Practice for Monitoring Electric Power Quality.

IEEE Std 1346, IEEE Recommended Practice for Evaluating Electric Power System Compatibility with Electronic Process Equipment.

IEEE Std C62.41, IEEE Recommended Practice for Surge Voltages in Low-Voltage AC Power Circuits.

NFPA 70, 2005 Edition, National Electrical Code® (NEC®).[8]

---

[4]IEC publications are available from the Sales Department of the International Electrotechnical Commission, Case Postale 131, 3, rue de Varembé, CH-1211, Genève 20, Switzerland/Suisse (http://www.iec.ch/). IEC publications are also available in the United States from the Sales Department, American National Standards Institute, 25 West 43rd Street, 4th Floor, New York, NY 10036, USA (http://www.ansi.org/).

[5]IEEE publications are available from the Institute of Electrical and Electronics Engineers, Inc., 445 Hoes Lane, Piscataway, NJ 08854, USA (http://standards.ieee.org/).

[6]The IEEE standards or products referred to in this subclause are trademarks of the Institute of Electrical and Electronics Engineers, Inc.

[7]IEEE Std 518-1982 has been withdrawn; however, copies can be obtained from Global Engineering, 15 Inverness Way East, Englewood, CO 80112-5704, USA, tel. (303) 792-2181 (http://global.ihs.com/). Copies are also available from the Institute of Electrical and Electronics Engineers, Inc., 445 Hoes Lane, Piscataway, NJ 08854, USA (http://standards.ieee.org/).

[8]The NEC is published by the National Fire Protection Association, Batterymarch Park, Quincy, MA 02269, USA (http://www.nfpa.org). Copies are also available from the Institute of Electrical and Electronics Engineers, Inc., 445 Hoes Lane, Piscataway, NJ 08854, USA (http://standards.ieee.org/).

 Copyright © 2006 IEEE. All rights reserved.

3.10 Bibliography

Additional information may be found in the following sources:

[B1] Allen, G. W., and Segall, D., "Monitoring of Computer Installations for Power Line Disturbances," *IEEE Winter Power Meeting Conference Paper,* WINPWR C74 199-6, 1974 (abstract in *IEEE Transactions on PAS,* vol. PAS-93, p. 1023, July/Aug. 1974).

[B2] CFR Title 47, Telecommunications—Part 15: Radio Frequency Devices (FCC).[9]

[B3] Dorr, D., "Point of Utilization Power Quality Study Results," *IEEE Transactions on Industry Applications,* vol. 31, no. 6, pp. 658–666, July/Aug. 1994.

[B4] Dorr, D. et al., "Interpreting Recent Power Quality Surveys to Define the Electrical Environment," *IEEE Transactions on Industry Applications,* vol. 33, no. 6., Nov./Dec. 1997.

[B5] EPRI TR-106294-V2, *An Assessment of Distribution System Power Quality: Volume 2: Statistical Summary Report*, Palo Alto, California, May 1996.

[B6] FIPS Pub 94-1983, Guideline on Electrical Power for ADP Installations.[10]

[B7] Goldstein, M., and Speranza, P. D., "The Quality of U. S. Commercial ac Power," *INTELEC (IEEE International Telecommunications Energy Conference)*, pp. 28–33 [CH1818-4], 1982.

[B8] Graf, W., and Nanevicz, J. E., "Topological Grounding Anomalies," *International Aerospace and Ground Conference on Lightning and Static Electricity,* June 20–28, 1984.

[B9] Hughes, M. et al., "Distribution Customer Power Quality Experience," *IEEE Transactions on Industry Applications,* vol. 29, no. 6, Nov./Dec. 1993.

[B10] IEEE Surge Protection Standards Collection (C62), 1995 Edition.

[B11] IEEE Std C62.45-2002, IEEE Recommended Practice on Surge Testing for Equipment Connected to Low-voltage (1000 V and Less) AC Power Circuits.

[B12] Key, T. S., "Diagnosing Power Quality Related Computer Problems," *IEEE Transactions on Industry Applications,* vol. IA-15, no. 4, July/Aug. 1979.

[B13] MacGorman, D. R., Maier, M. W., and Rust, W. D., "Lightning strike density for the contiguous United States from thunderstorm duration records," Report to the U.S. Nuclear Regulatory Commission, NUREG/CR3759, 1984, p. 44.

[B14] Martzloff, F. D., "Coordination of Surge Protectors in Low-Voltage AC Power Circuits," *IEEE Transactions on Power Apparatus and Systems,* vol. 99, no. 1, pp. 129–133, Jan./ Feb. 1980.

[B15] Martzloff, F. D., and Gruzs, T. M., "Power Quality Surveys: Facts, Fictions, and Fallacies," *IEEE Transactions on Industry Applications,* vol. 24, no. 6, pp. 1005–1018, Nov./Dec.1988.

[9]CFR publications are available from the Superintendent of Documents, U.S. Government Printing Office, P.O. Box 37082, Washington, DC 20013-7082, USA (http://www.access.gpo.gov/).

[10]FIPS Pub 94-1983 has been withdrawn; however, copies can be obtained from Global Engineering, 15 Inverness Way East, Englewood, CO 80112-5704, USA, tel. (303) 792-2181 (http://global.ihs.com/).

Copyright © 2006 IEEE. All rights reserved.

[B16] MIL-HDBK-419, Grounding, Bonding, and Shielding for Electronic Equipment and Facilities, vol. 1 (Basic Theory) and vol. 2 (Applications).[11]

[B17] MIL-STD-188-124, Grounding, Bonding, and Shielding for Common Long Haul Tactical Communication Systems Including Ground Based Communications—Electronics Facilities and Equipment.

[B18] Morrison, R., *Grounding and Shielding in Instrumentation.* New York: John Wiley & Sons, 1977.

[B19] Ott, H., *Noise Reduction Techniques in Electronic Systems.* New York: John Wiley & Sons, 1989.

[B20] Sabin, O. O., Grobe, T. C., and Sundrnam, A., "Surveying Power Quality Levers on U.S. Distribution Systems," *Proceedings of the 13th International Conference on Electricity Distribution (CIREO '95)*, Brussels Belgium, May 1995.

[B21] SEMI E10-0304E-1996, Standard for Definition and Measurement of Equipment Reliability, Availability, and Maintainability (RAM).[12]

[B22] SEMI F47-0200-2000, Specification for Semiconductor Processing Equipment Voltage Sag Immunity.

[B23] SEMI S10-1103-1997, Safety Guideline for Risk Assessment and Risk Evaluation Process.

[B24] *Westinghouse Electrical Transmission and Distribution Reference Book,* 1964.

[11]MIL publications are available from Customer Service, Defense Printing Service, 700 Robbins Ave., Bldg. 4D, Philadelphia, PA 19111-5094.

[12] SEMI publications are available at http://www.semi.org/.

 Copyright © 2006 IEEE. All rights reserved.

Chapter 4
Fundamentals

4.1 Introduction

Chapter 3 presented a description of the nature of power quality problems, of possible solutions, and of the resources available for dealing with these problems. To the novice and expert alike, the sheer complexity of the subject can be a source of confusion and frustration. It is the intent of this chapter to provide an overview of the fundamental theory necessary to better understand equipment upset mechanisms, such as power quality variations, how they propagate, how they can be conducted and/or radiated through the power distribution and grounding system. In order to accomplish this, it is necessary to start with the most basic electrical theory and build towards the complex. Simple RLC circuit analysis will be sufficient for many situations. In other circumstances, wave and transmission line theory is more applicable. It is necessary to have at least a general understanding of both to cover the full span of power quality related issues.

4.1.1 Major issues of power quality

The major issues of power quality include three broad categories: wave shape distortion (harmonics), voltage variations, and electromagnetic interference (EMI). Wave shape distortion is a relatively low-frequency, steady-state condition (typically less than 3000 Hz at multiples of the power frequency). Circuit analysis consisting of lumped resistance, inductance, and capacitance is commonly used to understand and resolve harmonic problems.

Voltage variations can have both low- and high-frequency components. Sags and swells are at the power frequency and tend toward being relatively short duration (one half-cycle to one minute) events. For longer duration events such as “undervoltage” or “overvoltage,” steady-state analysis could be used in most cases, if the magnitude stays at the same level for the duration of the event. Another type of voltage variation is the transient event. Switching surges, lightning, etc., are transient events that are short in duration and changing throughout the event. Transient analysis (with differential equations) is required to model these types of events, and they often have high-frequency aspects.

EMI can have both high- and low-frequency considerations. However, the vast majority of EMI issues are in the area of high frequency. The only major low-frequency issue is power frequency magnetic fields. On the high-frequency side are all the telecommunication and computer interference issues.

4.1.2 Grounding

Grounding is such an important part of the electrical system requirements to achieve power quality that some readers may be surprised it is not included under 4.1.1. In this method of organization, “major issues” are disturbances or alterations of free-flowing sinusoidal energy. Grounding is a necessary part of every energy delivery system.

The point is that grounding is an essential part of the infrastructure, not just a tool to achieve power quality. Think of “grounding” as part of electricity in the same way that “gravity” is part of architecture. Grounding permeates all aspects of power quality.

This chapter will address what is required as a grounding system to deal with of the major power quality issues. The issues are presented first. Subclause 4.8 is presented last so that the reader already has an understanding of the issue being addressed and will therefore have a better understanding of why a specific type of grounding system is recommended.

Copyright © 2006 IEEE. All rights reserved.

4.1.3 Engineering approximations

An important technique in the area of power quality is using approximations. It is a very common engineering practice to simplify very complex problems by using approximations. Care must be exercised in this area. At times the part that is "insignificant" in normal calculations is very significant for power quality. For example, when a transformer is modeled for circuit analysis the inductance far out weighs the capacitance, so it is normal to model the transformer as resistors and inductors as shown in Figure 4-37. However, if high-frequency interference is an issue, the winding-to-winding capacitance of the transformer cannot be ignored. It is very significant!

4.2 Electric power supplier's distribution system voltage disturbances

There are two major types of transient voltage disturbances: disturbances that add energy into the circuit and ones that deprive the load of energy. For example, a lightning induced transient adds energy to the circuit while variations such as voltage sags and load turn-on transients would deprive the other circuit loads of energy. Since the handling of additive transients is virtually the opposite of that for subtractive transients, each will be addressed separately.

In addition to determining whether a voltage disturbance is additive or subtractive, another significant distinction is "load side" versus "utility side" power variations. Though many power quality problems originate on the load side (or inside the facility experiencing the problem), an understanding of the quality of power provided to the facility by the supplier is a logical place to start.

Electric power suppliers (which may or may not be regulated utilities) in the U.S. generally adhere to ANSI C84.1[1] for the delivery of electrical power. This ANSI document provides guidelines for steady-state voltage tolerances, as shown in Table 4-1.

Reasonable continuity (e.g., continuous availability) of electrical power to the service at a given site can generally be obtained from a connection to the electric power supplier's distribution system; however, power quality cannot often be assured to the same degree as continuity. Most electric power suppliers have available standard power reliability indices such as the average service availability index (ASAI) (see Edison Electric Institute [B11]).[2]

The typical indices (such as the ASAI) do not take into direct account the very short duration interruptions (momentary interruptions) of power. Momentary interruptions, as defined in these cases by the electric power supplier, generally are considered to be less than 5 min. (See IEEE Std 1366™ [B31].)

Typically, momentary interruptions are the result of a variety of normal and abnormal operations in the electric power supplier's distribution system (see IEEE Std 446™ and Allen and Segall [B1]). Due to the definition of a power interruption generally used by electric power suppliers vs. the capabilities of electronic load equipment, distribution circuits that the electric power supplier might consider to be reliable may be totally inadequate to the user of electronic load equipment. It is advisable that users of electronic equipment work with their local electric power supplier to determine operating characteristics of the particular distribution circuits in question, considering both the frequency of momentary interruptions and other pertinent reliability indices—including power quality.

[1]Information on references can be found in 4.11.
[2]The numbers in brackets correspond to those of the bibliography in 4.12.

 Copyright © 2006 IEEE. All rights reserved.

Table 4-1—Standard nominal system voltages and voltage ranges[a,b,c]

VOLTAGE CLASS	NOMINAL SYSTEM VOLTAGE			Nominal utilization voltage (Note 1)	VOLTAGE RANGE A			VOLTAGE RANGE B		
					Maximum	Minimum		Maximum	Minimum	
	Two-wire	Three-wire	Four-wire	Two-wire Three-wire Four-wire	Utilization and service voltage	Service voltage	Utilization voltage	Utilization and service voltage	Service voltage	Utilization voltage
Low voltage (Note 1)	Single-phase systems									
	120			**115**	126	114	110	127	110	106
		120/240		**115/230**	**126/252**	**114/228**	**110/220**	**127/254**	**110/220**	**106/212**
	Three-phase systems									
			208 Y/120	**200**	**218 Y/126**	**197 Y/114**	**191 Y/110**	**220 Y/127**	**191 Y/110** (Note 2)	**184 Y/106** (Note 2)
			240/120	**230/115**	**252/126**	**228/114**	**220/110**	**254/127**	**220/110**	**212/106**
		240		**230**	252	228	220	254	220	212
			480 Y/277	**460**	**504 Y/291**	**456 Y/263**	**440 Y/254**	**508 Y/293**	**440 Y/254**	**424 Y/245**
		480		**460**	**504**	**456**	**440**	**508**	**440**	**424**
		600		**575**	630	570	550	635	550	530
Medium voltage		2 400			2 520	2 340	2 160	2 540	2 280	2 080
			4 160 Y/2 400		4 370 Y/2 520	4 050 Y/2 340	3 740 Y/2 160	4 400 Y/2 540	3 950 Y/2 280	3 600/2 080
		4 160			**4 370**	**4 050**	**3 740**	**4 400**	**3 950**	**3 600**
		4 800			5 040	4 680	4 320	5 080	4 560	4 160
		6 900			7 240	6 730	6 210	7 260	6 560	5 940
			8 320 Y/4 800		8 730 Y/5 040	8 110 Y/4 680	—	8 800 Y/5 080	7 900 Y/4 560	—
			12 000 Y/6 930		12 600 Y/7 270	11 700 Y/6 760	—	12 700 Y/7 330	11 400 Y/6 580	—
			12 470 Y/7 200		**13 090 Y/7 560**	**12 160 Y/7 020**	—	**13 200 Y/7 620**	**11 850 Y/6 840**	—
			13 200 Y/7 620		**13 860 Y/8 000**	**12 870 Y/7 430**	—	**13 970 Y/8 070**	**12 504 Y/7 240**	—
			13 800 Y/7 970		14 490 Y/8 370	13 460 Y/7 770	—	14 520 Y/8 380	13 110 Y/7 570	—
		13 800			**14 490**	**13 460**	**12 420**	**14 520**	**13 110**	**11 880**
			20 780 Y/12 000		21 820 Y/12 600	20 260 Y/11 700	—	22 000 Y/12 700	19 740 Y/11 400	—
			22 860 Y/13 200		24 000 Y/13 860	22 290 Y/12 870	—	24 200 Y/13 970	21 720 Y/12 540	—
		23 000			24 150	22 430	—	24 340	21 850	—
			24 940 Y/14 400		**26 190 Y/15 120**	**24 320 Y/14 040**	—	**26 400 Y/15 240**	**23 690 Y/13 680**	—
			34 500 Y/19 920		**36 230 Y/20 920**	**33 640 Y/19 420**	—	**36 510 Y/21 080**	**32 780 Y/18 930**	—
		34 500			36 230	33 640	—	36 510	32 780	—
					Maximum voltage					
		46 000			48 300					
		69 000			**72 500**					
High voltage		**115 000**			**121 000**					
		138 000			**145 000**					
		161 000			169 000					
		230 000			**242 000**					
Extra-high voltage		**345 000**			**362 000**					
		500 000			**550 000**					
		765 000			**800 000**					
		1 100 000			**1 200 000**					

NOTES:

(1) Minimum utilization voltages for 120–600 V circuits not supplying lighting loads are as follows:

Nominal system voltage	Range A	Range B
120	108	104
120/240	**108/216**	**104/208**
(Note 2) **208 Y/120**	**187 Y/108**	**180 Y/104**
240/120	**216/108**	**208/104**
240	216	208
480 Y/277	**432 Y/249**	**416 Y/240**

(2) Many 220 V motors were applied on existing 208 V systems on the assumption that the utilization voltage would not be less than 187 V. Caution should be exercised in applying the Range B minimum voltages of this table and Note 1 to existing 208 V systems supplying such motors.

[a]Preferred system voltages in bold-face type.

[b] Four wire systems in the table are designated by the phase-to-phase voltages followed by the letter Y (except for the 240/120 V delta system), a slant line, and the phase-to-neutral voltage.

[c]Reprinted from ANSI C84.1 by permission of the National Electrical Manufacturers Association.

Copyright © 2006 IEEE. All rights reserved.

Voltage waveform disturbances at the electric power supplier's feeder level have been monitored (see Allen and Segall [B1], Edison Electric Institute [B11], and Golde [B16]), and compared and contrasted (see Martzloff and Gruzs [B41]). The general conclusion is that line voltage sags are most frequent, and thus, most likely to contribute to electronic load disruptions. They are followed by surges, interruptions, and swells, in lesser probabilities. The actual percentage of each type of voltage disturbance varies with time, location, the response characteristics, and the threshold settings of the particular power quality monitoring instrument being used. All things being otherwise equal, these variances are most highly influenced by the particular threshold settings utilized on the monitoring equipment.

User equipment residing near locations where lightning enters the electric power supplier's distribution system will experience high-energy surge conditions via the building's service entry wiring since it provides the interface to the electric power supplier's ac distribution system. But user equipment located at sites further away from the strike location most likely will experience momentary sag conditions as opposed to surges. This typically occurs when one or more lightning arresters located on the electrical supply system's distribution wiring go into operation and are located between the strike point and the service entry of the user's site. The momentary sags correctly result from deliberate current-shunting actions of the electric power supplier's lightning-protection equipment, which locally load down the ac distribution system during its operation. To a degree this action can also be randomly duplicated by arcing to ground from the conductors or from insulator flashovers on the distribution system's wiring.

4.3 Voltage disturbances—subtractive

As discussed in the previous subclause, voltage disturbances can originate in the utilities' distributions system. They can also be created inside the facility and affect other equipment in the vicinity of the disturbance. (See Figure 4-1.)

Under the heading of "Voltage parameter affecting loads," Table 4-2 summarizes the sources of voltage waveform disturbances, distortions, and their general characteristics (see *The Dranetz Field Handbook* [B60] and McEachern [B44]).

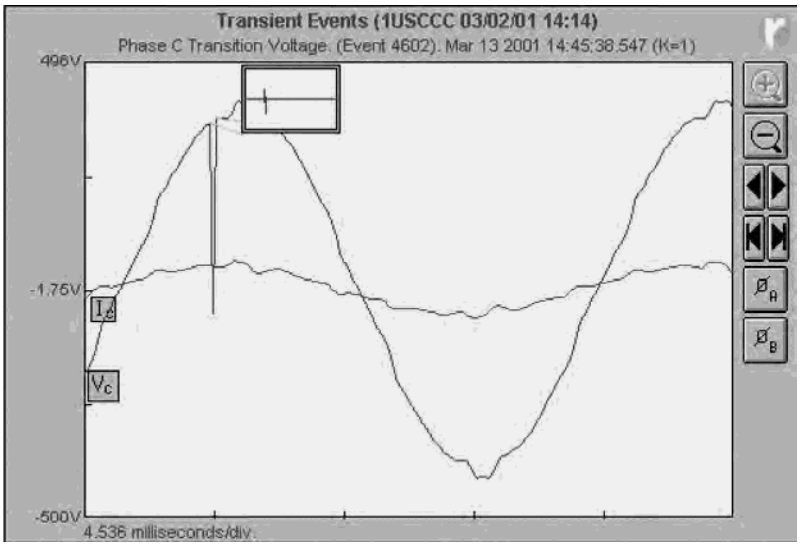

Figure 4-1—Voltage transient that is subtractive

 Copyright © 2006 IEEE. All rights reserved.

Table 4-2—Matching sensitive load and power source requirements[a]

Voltage parameter affecting loads	Typical range of power sources	Typical immunity of electronic loads		
		Normal	Critical	Units affected and comments
Over and undervoltage	+6%, 13.3%	+10%, 15%	±5%	Power supplies, capacitors, motors. Component overheating and data upset.
Swells/sags	+10%, 15%	+20%, 30%	±5%	Power supplies, capacitors, motors. Component overheating and data upset.
Transients, impulsive and oscillatory, power lines	Varies: 1 006 000 V	Varies: 5 001 500 V	Varies: 200 500 V	Dielectric breakdown, voltage overstress. Component failure and data upset.
Transients, impulsive and oscillatory, signal lines	Varies: 1 006 000 V	Varies: 50 300 V	Varies: 1550 V	Dielectric breakdown, voltage overstress. Component failure and data upset.
ESD	<45 kV 10 001 500 V	Varies widely: 200 500 V	Varies widely: 1550 V	Signal circuits. Dielectric break down, voltage overstress. Component failure and data upset. Rapid changes in signal reference voltage.
RFI/EMI (conducted) (normal and common-mode)	10 V up to 200 kHz less at higher frequency	Varies widely: 3 V typical	Varies widely: 0.3 V typical	Signal circuits. Data upset, rapid changes in signal reference voltage.
RFI/EMI (radiated)	<50 kV/m, <200 kHz <1.5 kV/m, >200 kHz	Varies widely with shielding	Varies widely with shielding	Signal circuits. Data upset, rapid changes in signal reference voltage.
Voltage distortion (from sine wave)	550% THD	510%	35%	Voltage regulators, signal circuits, capacitor filters, capacitor banks. Overheating, undercharging.
Phase imbalance	210%	5% max	3% max	Polyphase rectifiers, motors. Overheating.

Copyright © 2006 IEEE. All rights reserved.

Table 4-2—Matching sensitive load and power source requirements[a] *(continued)*

Current parameter affecting sources	Typical range of load current	Typical susceptibility of power sources		
		Normal	Critical	Units affected and comments
Power factor	0.850.6 lagging	0.8 lagging	<0.6 lagging or <0.9 lagging	Power source derating or greater capacity source with reduced over all efficiency.
Crest factor	1.42.5	1.02.5	>2.5	1.414 normal; impact function of impedances at 3rd and higher harmonics (36% *Z*). Voltage shape distortion.
Current distortion	010% total rms	510% total 05% largest	5% max total 3% largest	Regulators, power circuits. Overheating.
DC current	Negligible to 5% or more	<1%	As low as 0.5%	Half-wave rectifier loads can saturate some power sources, trip circuit breakers.
Ground current	010 A rms + noise and surge currents	>0.5 A	<0.1 A	Can trip GFI devices, violate code, cause rapid signal reference voltage changes.
Frequency parameter affecting loads	**Typical range of power sources**	**Typical immunity of electronic loads**		
		Normal	**Critical**	**Units affected and comments**
Line frequency	±1%	±1%	±0.5%	Zero-crossing counters.
Rate of frequency change	1.5 Hz/s	1.5 Hz/s	0.3 Hz/s	Phase synchronization circuits.

[a]Adapted with permission from FIPS Pub 94.

4.3.1 Voltage disturbance sources/characteristics

As discussed in Chapter 3 and in 4.2, voltage sags on the utility system are one of the most common power disturbances causing nuisance tripping and shutdown of electronically controlled processes. Nearly all of these sags are very short in duration (5 to 30 cycles) and are the result of faults on the utilities' power distribution circuits. The duration of the sag is determined by the time it takes to clear the fault, which is usually accomplished by tripping a circuit breaker.

In IEEE terminology, voltage sags are characterized by their remaining voltage, i.e., a 70% sag on a 120 V circuit would have 84 V remaining. In Europe, the IEC terminology is *voltage dip,* which is just the opposite, i.e., a 70% dip means the voltage went down 70% to 36 V. (See Figure 4-2.)

Faults also occur inside facilities, which in turn cause voltage sags. However, they occur much less frequently than on the utility distribution system, since very few facilities have to deal with tree branches blowing into the power lines, cars running into the power poles, etc., which are very common problems for the utility's distribution system.

 Copyright © 2006 IEEE. All rights reserved.

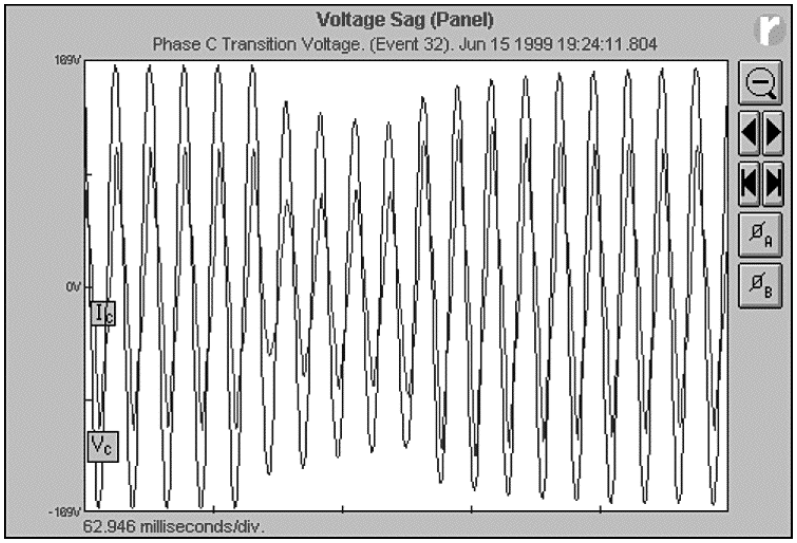

Figure 4-2—70% voltage sag = 30% voltage dip

Inside the facility, load-related changes and switching events cause many of the voltage disturbances that occur between equipment and their power sources. Several common load-derived sources of voltage waveform disturbances and their relative characteristics are presented in the following subclauses.

4.3.1.1 Step loads

Step load changes are one of the most common sources of voltage disturbance. The basic cause of the voltage disturbance is the transient voltage created by the sudden change in current through the distribution systems' inductance ($-e = Ldi/dt$) and the steady-state change in voltage drop caused by the application or removal of load current. For most systems, the switching transient is short-lived. A new steady-state current level, and sometimes voltage level, is reached. Where the load is large compared to the size of the distribution system, there will be a measurable drop in voltage.

Removal of a significant load can create a transient overvoltage, due to the inductance of the distribution systems. However, this is an additive transient, discussed in more detail in 4.4.1.1.

Properly applied ac voltage regulators can be used to correct steady-state voltage drops within the power distribution system, but only after a time delay that is an inherent characteristic of the feedback system used in the regulator being utilized. All ac voltage regulators have a characteristic time delay from the sensing of a voltage variation on their output to the time of correction on their output, and this is mainly dependent upon the type of regulator technology chosen in each case.

It is also of note that most of the voltage regulators in service across the U.S. are on the utility system and would therefore have very little effect on the voltage drops within a facility. A more common method of dealing with voltage drop within a facility is to adjust the taps on the distribution transformers.

Adjusting the taps on distribution transformers can also be a very successful method of dealing with utility sags, particularly if they are not very severe. By having the operating voltage at the high end of the acceptable voltage range, the electronic equipment's "ride-through" for voltage sags may be improved in two ways. First, all the equipment will start at a higher voltage and therefore will have higher remaining voltage during the sag (60% of 120 V is 72 V, while 60% of 115 V is only 69 V). Second, the energy stored in the capacitors of the power supply is directly proportional to the applied voltage squared and may have more energy (depending on how the power supply regulates voltage).

Copyright © 2006 IEEE. All rights reserved.

In order to properly adjust the taps on the distribution transformers, it is necessary to first measure the voltage variation of the utility throughout the week. Once the high level (when the utility is lightly loaded) and the low level of voltage (during peak load) is known, the highest tap value that does not cause overvoltage during light loading is used.

4.3.1.2 Inrush currents (motors, transformers, and power supplies)

Inrush currents are associated with the initial energizing of motors, transformers, and various ac-dc power supplies (e.g., via the initial magnetizing current for an input transformer if one is used, the initial filter capacitor after the rectifier, or both) that are typically found in electronic equipment.

AC motor starting (inrush) currents are about equal to the locked-rotor currents, which are typically five to seven times their rated full-load current. These inrush currents can require around 0.3 s to 3.0 s to decay to steady-state values, depending on motor acceleration time and inertia of the motor load. DC motor-starting currents appear as rectifier loads on the ac power distribution system.

The initial energizing of transformers often creates magnetizing current transients (e.g., “premag” currents). Inrush currents 10 to 20 times their normal full-load current can exist, decaying in several cycles under worst-case conditions. Actual inrush currents will depend on the phase angle of the initial voltage waveforms and the state of residual magnetic (core) flux from prior transformer energizing. See Figure 4-3.

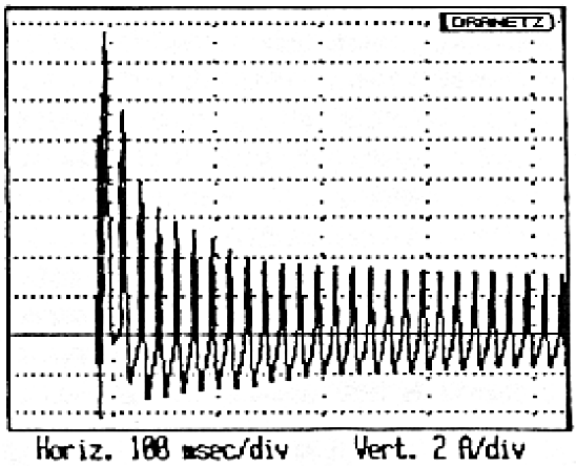

Figure 4-3—Transformer inrush current

Unless the typical ac-dc power supply is equipped with a current-inrush limiting feature (e.g., “soft-start”), the initial capacitor charging current at power-on time can cause fairly high levels of current inrush, especially when the capacitor is fully discharged and the initially applied voltage is at its peak value. For example, typical ac-dc switched-mode power supply (SMPS) units often have no input transformer, but instead connect a full-wave bridge rectifier directly across the ac line, which then directly feeds a large filter capacitor bank that is used for bulk energy storage for the high-frequency inverter stage that follows. This arrangement causes the capacitor bank to be charged as much as possible on the first half-cycle of the applied current, with the current only limited by upstream circuit impedances.

4.3.1.3 Fault currents

Fault currents represent an extreme case of transient current flow and thus ac line-voltage disturbance. Depending on the power system impedance, several orders of magnitude of normal full-load current may be available. Severe voltage reductions to adjacent equipment usually result until the fault is cleared. Motors that are running during the fault may act as regeneration current sources and will dump additional current

 Copyright © 2006 IEEE. All rights reserved.

into the fault from several cycles (induction motors) to several seconds (synchronous motors) in worst-case conditions.

Some fault conditions do not result in high currents and may not cause overcurrent protective devices to operate (e.g., arcing ground faults, under certain conditions). These faults often create significant high-frequency transient voltages of large amplitude. Solidly grounded power sources, with ground-fault protection on 480 V systems, tend to minimize this type of fault and rapidly clear them when they do occur.

Fault currents entering and flowing on externally attached EGCs of all types (e.g., supplementary grounding conductors) can pose a transient voltage problem to connected electronic load equipment that, in turn, is interconnected between units by low-voltage logic, data, or signaling cables. This occurs because the equipment grounding system often presents itself as a source of high transient voltage during ground faults due to the effects of $-e = L\ di/dt$ (neglecting the effects of any distributed capacitance). Transients developed across the inductance of the involved grounding conductors can then destroy interface electronics at the ends of the interconnecting cables, telecommunications cables, and on occasion, related ac-dc logic power supply components.

4.3.2 Potential impacts of transient voltage disturbances

Disturbances of the ac voltage waveform have been shown to significantly impact both the ac distribution system and the electronic loads (Key [B34]). The most significant of these are discussed in 4.3.2.1 through 4.3.2.5.

4.3.2.1 Complete loss of ac power to electronic loads

Excessive motor and transformer inrush currents can exceed the time-current trip curves of upstream overcurrent protective devices, causing an open circuit to electronic loads.

4.3.2.2 Short-term voltage variances

Temporary reductions in the ac distribution voltage can be caused by significant step changes in load current. This is particularly true for transformer and motor inrush currents, and large load systems that dynamically switch their subsystems on/off. See FIPS Pub 94. The time duration of these low ac voltages cause stored-energy problems in power ac-dc power supply filter circuits that can exceed their ride-through time. This acts as the equivalent of an extreme ac line-voltage sag or longer duration interruption.

For example, the inrush current time is minimized when the motor is connected to an ac supply of low impedance since the motor's current demands can be met by this kind of ac supply without a significant concurrent low input voltage condition occurring. However, if an ac supply is used with significant impedance present within it, the resulting low line voltage due to inrush current demands will cause the motor to take longer to reach its operating RPM and thus its nominal current input. As a result of this, it can be fairly concluded that using a voltage regulator to serve both motors and other loads that are affected by short-term voltage variances is not a recommended practice without very careful engineering that correctly accounts for these dynamic effects.

4.3.2.3 SMPS input voltage selector

Certain SMPS designs have evolved for world trade purposes where the ac line input to the SMPS may be either 120 V ac (typically North America) or 230 V ac (typically European), with the only difference being the type of input line cord assembly being used. This is generally accomplished by an electronic voltage sensing circuit in the SMPS that automatically connects the filter capacitors in series or parallel, according to the ac voltage that is sensed on the line terminals. A momentarily high ac line voltage can sometimes trigger this circuit into changing the connection from 120 V ac to 230 V ac while operating on a 120 V ac line. Unless the SMPS is equipped with a time-delay or other form of protective circuit to prevent this, the

Copyright © 2006 IEEE. All rights reserved.

problem can occur. The end result of this unwanted switching action is a malfunction of the SMPS, which will affect its connected load. This is not a problem on SMPS designs that have the input voltage set by manual means, or those with operating voltages that range from 90 V ac to 264 V ac.

4.3.2.4 Digital circuit data upset

Many of the aforementioned disturbances may occur with no other effect on the connected electronic load equipment except to create data transfer or storage errors in digital logic circuits. Since digital logic is also used within equipment for various control purposes, these disturbances may also be seen to inappropriately activate power quality checking circuits and to trigger them into alarm or error status—often on an electronic system-wide basis. In addition to error and alarm reporting, such circuits may also be connected to cause the associated equipment to be placed into a self-restoring standby state (e.g., temporarily off-line as part of a power "fail-safe" operation) or to be placed into a full power-off state that can only be recovered from by manual, and often complex, operator intervention.

4.3.2.5 Frequency variations and slew rate

When an on-site generating system, such as an engine-alternator, is used as the ac power source for electronic load equipment and is closely matched in size to the load, almost any variations in loading (particularly step-loading) can cause related variations in rotational speed, which in turn produce a temporary change in the ac supply frequency until the speed governor of the engine-alternator makes its correction. Increased loading lowers shaft speed while decreased loading increases it. The amount of shaft speed change during loading changes is closely related to both the size/mass of the generating set in relation to the amount of the loading step change and to the type of speed-control governor employed on the generating equipment. Typically, a well-controlled correction occurs over several cycles when the recommended isochronous type of speed governor (which holds the speed constant regardless of load) is used on the engine. Other forms of speed governors are generally not effective in minimizing this condition in comparison to the isochronous type.

Step-load changes cause the shaft speed of the generating unit to change at a faster rate than will occur due to normal corrections controlled by the speed governor of the engine. This is as the speed governor is normally set up to limit the maximum rate-of-change of shaft RPM that results from its feedback input. Hence, the rate-of-change of the output frequency under governor control is limited as well. However, shaft speed changes and related output frequency rate-of-change caused by step-loading variations are not controlled, except by the maximum rate-of-change in speed that the equipment's rotating mechanical mass will allow. Therefore, unacceptably high rates-of-change in output frequency can be experienced due to step-loading changes. This is called a frequency "slew-rate" problem, and it can be a severe problem affecting the operation of some types of electronic load equipment.

An example of this is load equipment that establishes the clock timing or other synchronizing state based upon zero-crossings of the voltage waveform. This requirement is particularly susceptible to frequency slew-rate conditions. Typical limits on frequency slew rate are in the range of 1.5 Hz/s for most electronic loads and 0.3 Hz/s for critical electronic loads. See FIPS Pub 94.

Electronically controlled ac power sources that are derived from crystal-clock or phase-lock governed solid-state inverters, such as in modern solid-state uninterruptible power supply (UPS) equipment, are virtually immune to loading-related frequency slew-rate problems. In addition, they are designed to limit the frequency slew rate of the inverter, as when it is phase-matching its output to the bypass source in order to permit its output to be transferred between the inverter and bypass source in closely synchronized, no-break fashion via a synchronous static-switch. However, incompatible frequency slew rates between an inverter and an engine-alternator set arrangement can cause synchronous static-switch transfer problems between the inverter's output and the static bypass circuit provided to the engine-alternator set(s). In this case, should the UPS fail, the static transfer switch (STS) would not operate and the load would be interrupted.

 Copyright © 2006 IEEE. All rights reserved.

4.4 Voltage surges and interference—Additive

Voltage surges typically appear as decaying, oscillatory, sub-cycle voltage transients of any initial polarity. They are often of a singular or "burst" nature as opposed to being consistently repetitive on successive half-cycles of the ac voltage waveform. If the amplitude of these surges exceeds the nominal peak line voltage, they are a particular concern for many types of electronic equipment. (See Figure 4-4.)

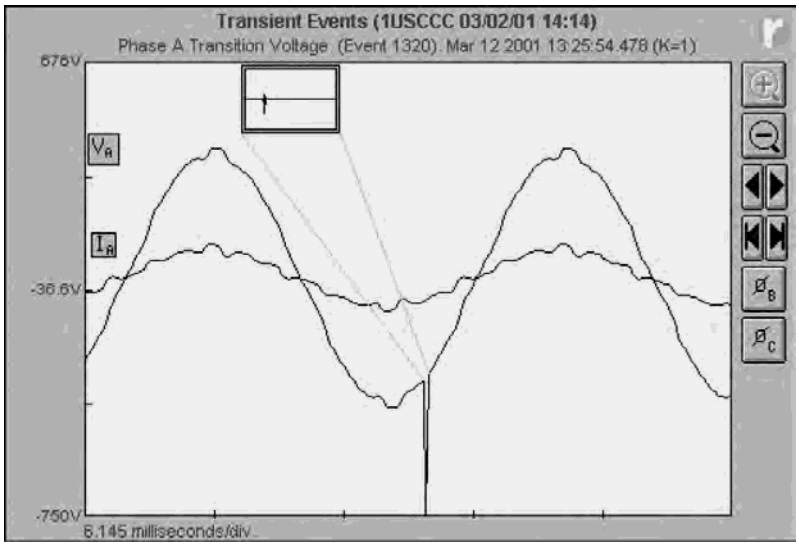

Figure 4-4—Voltage transient that is additive

Even though most electronic equipment should not be affected if the surge voltage amplitude is less than the peak voltage of the ac power system's nominal voltage waveform, very small voltage surges that have gained access to the ac power input terminals of electronic equipment have been documented to cause disruption of data flow and integrity. See FIPS Pub 94.

Higher voltage amplitude and higher energy surges applied to the ac input power terminals are often responsible for the destruction of components within the equipment (see Gallace and Pujol [B15] and Van Keuren [B66]). At some point, the amplitude and related energy content of the surge is certain to cause damage and destruction, such as when the characteristics of the surge closely approach or exceed those of the test waveforms used in the lightning simulation tests described in IEEE Std C62.41™. Any electronic equipment not certified to have been successfully tested to the requirements of this IEEE standard is of unknown surge immunity.

4.4.1 Sources/characteristics

There exists a large number of potential sources of electrical surges that can cause harm to electronic equipment and systems. The majority of these sources can be divided into two major categories—electrical power circuit switching and environmental causations.

4.4.1.1 Switching surges

Switching surges are associated with rapid changes in current flow rates (*di*/*dt*) within a given electrical system and the propagation of an associated voltage wavefront through the involved system. These surges are generally of the decaying oscillatory type, and they damp out somewhat rapidly due to the inherent losses in the electrical distribution system. High-frequency components in the switching surge are more prevalent near to the point of production for the surge and, due to circuit losses, become progressively

Copyright © 2006 IEEE. All rights reserved.

attenuated as propagation distance increases. Accordingly, the lower frequency components of the switching surge will propagate over longer distances from the point of origination than will high-frequency ones. However, the decay rates of the surge voltage being propagated are generally slower than their rise rates and are long relative to power system time constants.

Switching surges can take several forms, depending on system configuration and rate of change in operating conditions. For example, one can also visualize switching surges as involving the very rapid expansion or reduction of magnetic (H) and electric (E) fields into the nearby space surrounding the conductors used to transport the related switching current and voltage waveforms. These near-field phenomena are then capable of being coupled into any nearby victim conductors or equipment, where the effects may range from negligible to seriously affecting the operation of the victim equipment. It is not necessary for the switching surge to actually be conductively applied to the input power (or signal-data) terminals of victim equipment for disruption of its operation to occur if near-field coupling is used as a means of surge propagation from the aggressor conductors into victim conductors.

Typical causes of switching surges include the following:

a) Energizing or de-energizing the lumped and distributed reactive elements in premises power source wiring systems and connected load equipment

b) Arcing associated with contactor, relay or switch contacts, loose connections, and ground faults

c) Unsynchronized and non-current-limited, power-factor capacitor switching

Figure 4-5 depicts a generalized power network with self-inductances, L_L, mutual inductances, L_M, resistances, R, and capacitances, C. Changes in currents with time for all the closed circuits (loops) described by Figure 4-50 and Figure 4-51 can be generally described by Kirchhoff's laws. Assuming L_L, L_M, R, and C are constant, the total current flows can be divided into steady-state and transient components. The transient-current components are of interest.

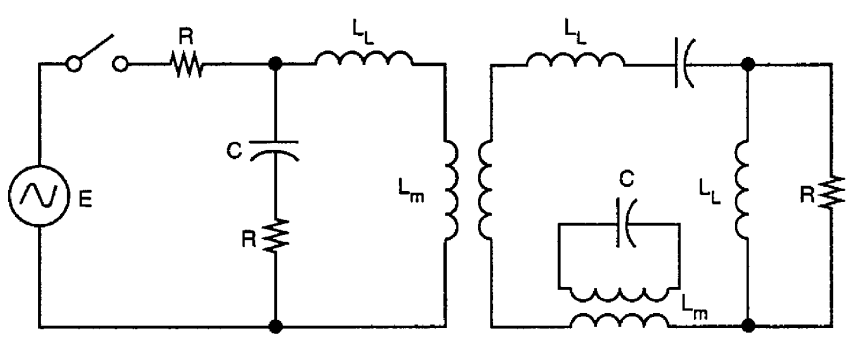

Figure 4-5—Generalized power network (equivalent for circuit analysis)

These transient currents produce transient magnetic fluxes and electric charge levels within individual components in the circuit. The following results can be shown in ac circuits with resistance, inductance, and capacitance (see Rudenberg [B51]):

a) There is no discontinuity in voltage or current at the time of switching.

b) A decaying alternating current and voltage develops with time.

c) The magnitude of the voltage disturbance (switching surge) is determined primarily by the initial voltage and circuit capacitance.

d) The effects of $-e = L\, di/dt$ in the circuit's inductances are mitigated by the circuit's capacitances per Equation (4.1).

 Copyright © 2006 IEEE. All rights reserved.

$$V_{c(\text{peak})} = I_0\sqrt{\frac{L}{C}} \tag{4.1}$$

where

$V_{c(\text{peak})}$ is the peak voltage developed across the circuit

I_0 is the maximum rate of change of current in the inductance

L is the inductance in henries (lumped or distributed)

C is the capacitance in farads (parasitic to the inductor)

Applying these concepts to the case of a typical distribution wiring system with a distant short circuit and interrupted by an overcurrent protection device somewhere in the line (depicted in Figure 4-6), we can further state (see Rudenberg [B51]):

a) The amplitudes of the transient oscillations are determined by the switching current in the inductance and the switching voltage across the capacitance.

b) The switching current and voltage change sinusoidally and in general have a phase difference.

c) Switching surges can attain a theoretical maximum of twice their source voltage.

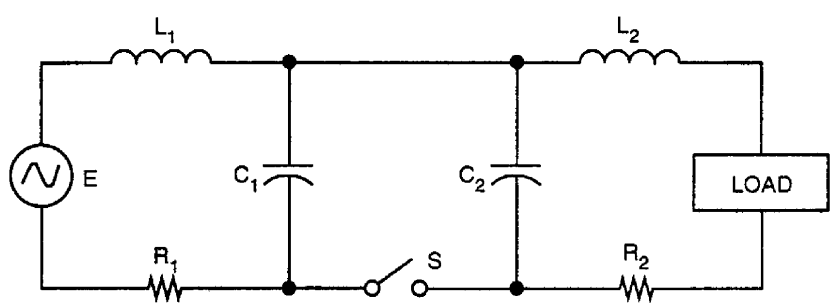

Figure 4-6—Typical ac building distribution wiring system (equivalent for circuit analysis)

Figure 4-7 and Figure 4-8 indicate the general behavior of a switching surge voltage and current respectively, with a stable arc drawn between the contacts. Note that before interruption of the switching surge (e.g., via a fuse, circuit breaker, or switch) the voltage across the closed contacts is zero, but the current flow through them is that of the load. The switch voltage increases very rapidly after the initial separation of contacts, the voltage being the differential between the transient recovery voltage of the source and load side circuits, which will have decaying oscillations at the resonant frequency of the complete circuit (Figure 4-7). Finally, full circuit voltage appears across the open contacts until the power source is disconnected or the contacts are reclosed. Current decreases in oscillatory fashion as the contacts open and finally drops to zero (Figure 4-8), where it remains until the contacts are reclosed on an energized power system with a connected load.

If the switching arc is unstable (inductive-capacitive circuit) as the contacts open, then the current is often interrupted and reignited several times before the dielectric strength of the increasing contact gap distance overcomes the voltage difference across the gap, thus creating a stable open-circuit condition. Figure 4-8 depicts the switch current associated with this multiple interruption-reignition across the switch contacts. It should be noted that the multiple interruption-reignition yields a series of electrical fast transients (EFTs), having a relatively long first-transition time ending with an abrupt collapse.

Copyright © 2006 IEEE. All rights reserved.

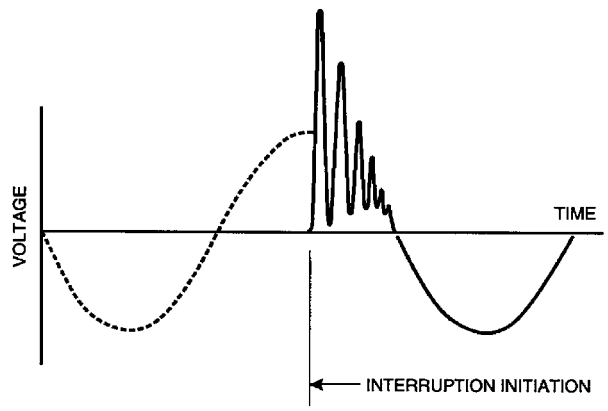

Figure 4-7—Typical behavior of (power-off) switching transient (recovery) voltage without multiple interruption

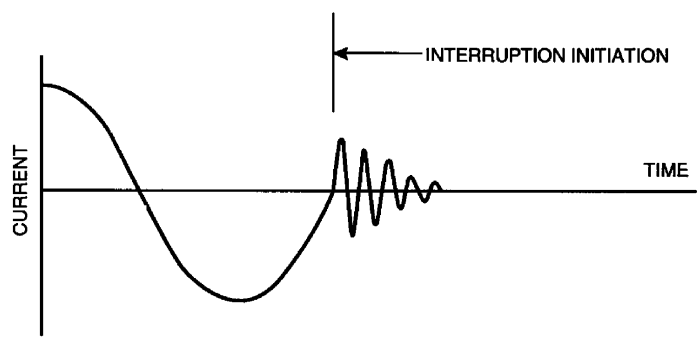

Figure 4-8—Typical behavior of (power-off) switching transient (recovery) current without multiple interruption

In general, the fast-rising wavefronts of switching surges are slowed by the distributed capacitance and series inductance of the building ac distribution system. The equivalent capacitance and inductance of the attached circuit in relation to the surge impedance of the equipment determines the nature of the switching surges (see Standler [B55]). The surge amplitudes (and any accompanying high frequencies) are reduced as a function of the overall losses per unit of length in the lossy and impedance mismatched electrical transmission line medium consisting of feeders, branch circuits, transformers, and related items. Hence the closer electrically that the equipment is to the sources of switching surges, the higher the risk of the surge affecting victim equipment and the higher the potential risk of secondary damage.

The generally beneficial attenuating effect of the building ac distribution system, as previously noted, is highly dependent upon the first-transition time of the surge. For example, the maximum voltage of a 5 ns first-transition time surge is reduced by a factor of 2, via 60 m to 70 m of a low-voltage, single-phase distribution branch circuit (in steel conduit) (see Martzloff and Leedy [B42]. Very little voltage attenuation is observed for longer first-transition time surges as reported in Martzloff [B40]. Three-phase circuits are expected to behave in similar fashion. Transmission-line effects, such as those involved with reflected voltage waves due to circuit end-termination impedance mismatch conditions, are principally related to the fast-rising wavefront of the surge. Thus, actual design characteristics and conditions should be assessed in each case (see Cianos and Pierce [B8] and Rudenberg [B51]).

 Copyright © 2006 IEEE. All rights reserved.

4.4.1.2 Environmentally induced surges

Lightning is the most obvious and destructive environmentally (i.e., not man-made) generated electrical transient. In addition, large-scale, rapidly occurring non-arcing atmospheric charge redistribution and ground-based electrostatic discharges (ESD) involving arcing are significant contributors to data disruption and damage to equipment (see Sunde [B57]). ESD is a particular problem when it occurs as an arc between personnel and susceptible equipment unless effective ESD precautions have been taken or the equipment has been rendered immune by design, testing, and construction.

4.4.1.2.1 Lightning-induced surges

Considerable information exists in the literature as to the mechanics of lightning strikes and their formation. A common example is the development of large negative charge centers in the lower regions of clouds causing a corresponding positive charge center to be induced on the earth's surface below them. This results in a potential (voltage) between the cloud and earth. Such charge centers continue to develop until the voltage gradient, at the cloud base, exceeds the dielectric breakdown strength of air. The result is a low-speed stepped downward leader that involves small currents which, upon reaching ground, is followed by a fast upward return stroke that involves huge current. Downward dart leaders may form through the channel carved by the primary/first leader and each will be followed by a subsequent upward return stroke (see Boyce [B6] and Standler [B55]).

As many as 40 return strikes have been observed (see McCann [B43]). Their currents range from a few hundred amperes to more than 500 kA, as shown in Figure 4-9. In much of North America, 20 kA to 40 kA is the value that is often used to estimate typical lightning current conditions. The typical strike durations last 50 µs to 100 µs. Most of the energy in the lightning strike is below 1 MHz, with <1.0 µs rise times. However, much energy exists both above this frequency and down to dc.

Importantly, and because of the high-frequency components in the lightning strike's current path, special wiring and grounding techniques must be used to properly conduct lightning currents on sites where electronic equipment is installed. The use of appropriate low-inductance wiring means with appropriate I^2t rating for the conductor(s) and multipoint grounding (MPG) as opposed to high rms current-carrying capability techniques and single-point ground (SPG) arrangements are the core of this special design requirement.

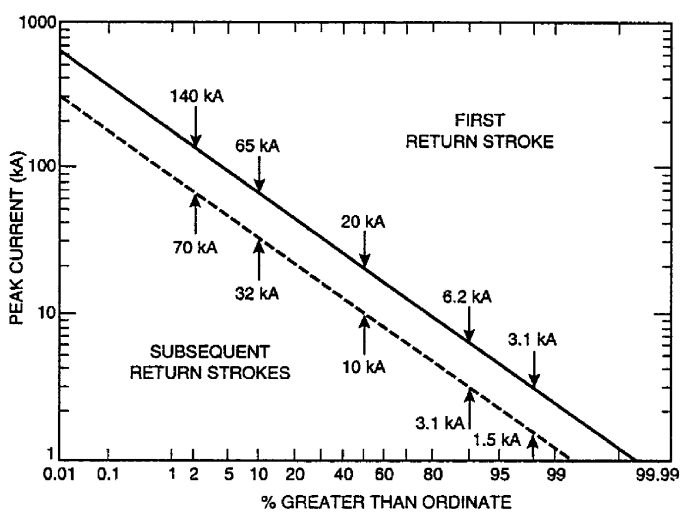

Adapted with permission from Cianos and Pierce [B8].

Figure 4-9—Distribution of lightning strike current

Copyright © 2006 IEEE. All rights reserved.

The large current levels associated with a lightning discharge in the earth create an ionized volume in the surrounding soil (ionization region). The ionization often occurs within the soil around the grounding electrode(s), and this lowers the grounding resistance. The extent of the ionization increases with an increase in soil resistivity. The ground potential rise (GPR) is the product of the injected current and the grounding resistance under ionized conditions. If the resulting voltage is sufficient (about 3 kV/cm) within this volume of earth, the lightning energy arcs directly to any highly conductive elements (e.g., buried cables, pipes, and metallic structural elements), thus causing voltage rises considerably higher (and at a more rapid rate) than in areas of earth that are outside the ionization volume. The shape and size of this ionization region is a function of the earth's resistivity, how homogeneous the soil or other earth mineral structure is, and the current in the lightning strike. This region is of particular importance in the suppression of the lightning strike's impact on nearby electronic equipment and/or conducting cables.

Figure 4-10 shows the arcing distances for bare conductors and for insulated conductors as a function of strike current and earth resistivity. Note that arcing distances of over 100 m are possible with soils having an electrical resistivity of 1000 Ω/m or greater (observed in several regions of the U.S.). Outside of this ionization region in the soil, the available lightning-induced voltage is considerably reduced, and thus the induced voltages into nearby electrical conductors are also lessened.

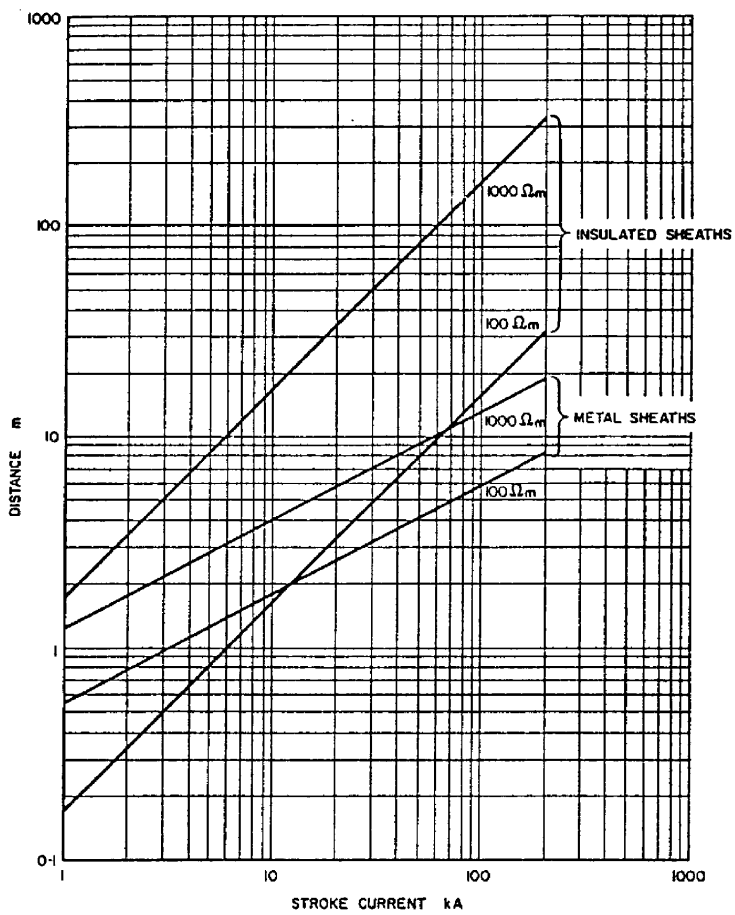

Reprinted from R.H. Golde, "The Lightning Conductor" [B16], with permission from Elsevier.

Figure 4-10—Arcing distances bare and insulated conductors

 Copyright © 2006 IEEE. All rights reserved.

Buried cables that suffer dielectric failure during a lightning strike to earth will have lightning current induced into the conductor(s) of the cable. However, if dielectric failure of the insulation of the cable does not occur, then the voltage distribution gradient in the soil will enable localized E-field (e.g., via capacitance) coupling to occur to the cable with maximum effects for that portion running parallel to the gradient. In similar fashion, the current flow in the earth that is parallel to the buried conductor will subject any nearby parallel-oriented cable or other conductor to H-field (magnetic) coupling. These field effects are near field and will rapidly fall off in exponential fashion as distance is increased between the victim conductor and the source of the field.

Aerial conductors are similarly affected by lightning strikes directly to them or to the nearby earth. The most damaging form of strike in this case is the direct strike, with anywhere from all to some of the lightning current being directly injected into the one or more aerial conductors involved. Insulation damage to aerial conductors generally occurs on multi-conductor cables, as used for signal and power transmission between locations. Damage to insulators is also a factor for typical power distribution conductors that are air-insulated from one another. Both E- and H-field coupling of lightning surges into aerial conductors occur and are both dependent upon proximity and orientation of the conductor to the charge or flux field of the lightning arc channel.

The parts of the lightning phenomenon most important in the design of lightning protection for electronic equipment are the first and the subsequent high-current return discharges. The most important characteristics of the discharge are its current, voltage, wave shape, polarity, charge, and frequency of occurrence.

Cloud-to-cloud discharges can also induce considerable transient energy into aerial and buried conductors (see Boyce [B6]). In this mode, H-field effects appear to be minimal while E-field effects predominate.

4.4.1.2.2 Non-arcing and remote-arcing atmospheric charge redistribution

Significant levels of transient energy can be induced into both buried and overhead conductors from the rapid redistribution of atmospheric (cloud) charge centers. This phenomenon commonly occurs during and immediately after lightning strikes, and is the result of the highly mobile charge centers attempting to find equilibrium with the relatively fixed earth charges and the man-made conductive structures installed on the earth. The rapid movement of charge causes electromagnetic fields similar to those of a cloud-to-cloud strike. The resulting voltage and current surges in overhead and buried conductors are modeled similarly to cloud-to-ground lightning strikes, except with an expanded time base (see Sunde [B57]).

An example of the foregoing might be a high-rise building containing grounded metallic structural elements and electrical systems, along with grounded metallic plumbing systems. During a charge buildup, a relatively slow redistribution of charge occurs in these conductive elements of the building in response to the movement of charge/clouds in the sky. Due to different rates of charge in the various metallic systems of the building, as governed by RLC time constants, it is possible to have a charge buildup (or reduction) occur in one item at a faster rate than a nearby one. When this occurs, and when the dielectric breakdown constant of the air between the two items at some very close point of approach is exceeded, a localized arc will occur. This can have effects ranging from simple data upset and corruption to actual equipment damage. And there may be no first-hand report of any nearby lightning strikes to associate the event with.

Unless a lightning discharge occurs between the charged building structure and an overhead cloud when the cloud and its charge pass overhead to a new location, the charge in the building must also follow and leave the building to find a new point of equilibrium. This means that the buildup rate of the charge will generally match its reduction rate, and no internal arcing between building structures will occur. In the event that a nearby lightning strike occurs, rapidly discharging the cloud, the charge in the building will find a new direct path to rapidly discharge.

Copyright © 2006 IEEE. All rights reserved.

The charge remaining in the building that does not arc to the overhead cloud can only rush back into the earth in an attempt to seek a new charge equilibrium in the earth. A movement of the charge in the building structure to the location of the strike to the nearby structure (or earth) is the only way this occurs. And since this occurs in rapid fashion, the vertical and diagonal movement of charge through the metallic structures of the building towards earth temporarily creates a new distribution of potential in terms of V/m in the building. Also, since an actual current flow in the metallic items of the building is occurring with relatively high di/dt rates, it generates a correspondingly intense and rapidly changing magnetic flux. The rate of change for the flux ($d\phi/dt$) is directly related to the rate of current change or di/dt, and as $d\phi/dt$ increases, its ability to induce current into nearby conductors similarly improves.

As a result of this, power, signal, communications, data, and grounding circuit conductors in the building are likely to have surge voltage and current impressed upon them during electrical storms even when no direct lightning strikes are observed to occur to the victim structure. These unwanted effects involve both localized arcing over small distances and near-field coupling.

4.4.1.2.3 Localized electrostatic discharge

ESDs typically have a high reference potential, rapid transition time, and short duration, but low amounts of energy. The general close proximity of the localized ESD to victim equipment and circuits generally compensates for the lower amounts of energy involved. This is especially the case when the ESD event occurs directly to some part of the victim equipment or to a circuit conductor. Localized ESD events are known to produce strong electromagnetic fields that have been seen to affect victim equipment up to a distance of 6 m to 9 m (20 ft to 30 ft). Therefore, a direct contact ESD to an item of victim equipment is not always necessary for problems to occur.

The typical localized ESD event is characterized by a first-transition time on the order of 1 ns and this produces a bandwidth for the radiated EMI of about 300 MHz or more (see IEEE Std C57.110™-1998 [B32]). The upper range of this bandwidth is clearly in the VHF-UHF range, so low-frequency grounding/ bonding, filtering, and shielding techniques will not prevent problems with nearby victim equipment or circuits from occurring.

Localized ESD events are rightfully referred to as miniature lightning bolts. Several charge generation processes exist, including triboelectrification, induction charging, and corona charging (see Greason [B19]). Static charge buildup typically results from a “rubbing action” between two materials (solid or liquid) of different surface-energy characteristics, in the absence of a conductive path between them. This buildup of charge is quickly released when a conductive path (discharge arc) is established (see Boxleitner [B5]). ESD surges can be very harmful to semiconductor devices in electronic equipment. Discharge voltages are often in the range of 5 kV to 40 kV (see Gallace and Pujol [B15]). Energy levels tend to be of the order of units of millijoules to tens of millijoules.

One can further characterize these surges as having very short first-transition times (high rates of dv/dt) and relatively slow decay rates (as compared to lightning or switching induced surges). Since ESD surges have little energy, once they get onto a conductor path they can be relatively easily negated by the use of (fast responding) voltage clamps and capacitors (see Standler [B55]) that are part of ESD-rated surge protective device (SPD) equipment. However, unwanted electromagnetic radiation and coupled near-field effects from that portion of the conductor that is upstream from the point of injection for the ESD can be a major problem. Accordingly, the proper placement of the SPD, along with correct routing and shielding of the upstream conductors, is a critical part of the ESD immunity process.

Electric field shielding of circuits is also an effective means of protection. In particular, proper E-field shielding must be assured on electronic equipment enclosures and for any conductors that penetrate the outer shield, unless they are appropriately filtered and clamped for ESD at the point of penetration.

 Copyright © 2006 IEEE. All rights reserved.

Fortunately, due to their very short first-transition times and the generally lower impedance and high-loss characteristics of ac feeder and branch circuit power system wiring, ESD surges attenuate considerably within the building ac distribution system. However, ESD can be a serious problem when it occurs to an ac power cord's conductors on a given item of ESD susceptible equipment, since in this case the ESD will occur close to the victim equipment. Typically, the distance in this case will not exceed 4.6 m (15 ft) in length and usually will be in the range of 1.8 m (6 ft) or less.

Also, ESD occurring to signal, data, and other interface or communications cable circuits can be a very serious problem because these conductors not only enter the victim equipment, but after penetration are also routed in close proximity to, and connect to, sensitive circuits. Therefore, ESD control is most important for ESD sources that are in close proximity to all kinds of victim electronic interface circuits.

In general, for electronic equipment operating areas as opposed to semiconductor manufacturing and board-assembly and service locations, where discrete devices are routinely handled, the most effective ESD control methods include the following:

a) Relative humidity control via an HVAC-process cooling system

b) Limiting the ESD discharge rate (or path), and slowing the rate of charge buildup by altering the RC time constant of the ESD circuit

NFPA 77 should be consulted for detailed design information. A discussion of the ESD mechanism and general ESD control techniques, along with test procedures for floor-surface resistance on cellular raised floor systems, is provided in FIPS Pub 94.

4.4.1.3 DC bus voltage detectors

A wide range of equipment that is dc operated, but powered from a rectifier system that feeds a dc bus, contains monitoring circuitry to detect when the dc bus voltage goes out of tolerance. Upon such detection, a protective shutdown of the dc load is generally effected. Typical equipment of this type is the adjustable-speed drive (ASD) in which a dc bus is used to power an inverter, which in turn powers an ac motor.

The usual problem with the foregoing arrangement occurs when a surge or oscillatory voltage is applied to the ac line input to the rectifier and that, after passing through the rectifier, then results in a corresponding momentary increase in the dc bus voltage that may exceed the overvoltage trip setting. A common cause of this is when the serving electrical power supplier switches power factor capacitors on-line, or when customer-owned capacitor banks are connected.

4.4.2 Transient and interference coupling mechanisms

The simplest and most common method by which transients and interference are transported to the electronic equipment causing problems is to be *conducted* by the power and grounding conductors directly from the source of the disturbance. It is also possible for transients or interference to transfer between separate circuits. In this case, the circuits are said to be "coupled" if energy can transfer electrically or magnetically between them. The coupled circuits have a mutual resistance, capacitance, inductance, or combination of these between them.

In the following subclauses, we will be discussing three coupling mechanisms: *capacitively coupled, magnetically coupled,* and *radiated* (as in TV or radio broadcasts). These three coupling mechanisms can introduce transients and interference into the circuit. It is worthy of note that in most cases where a transient or interference is coupled into the circuit, the disturbance is also conducted at least a short distance to where it causes the problem. The order given above, *conducted, capacitively coupled, magnetically coupled,* and *radiated* is also the order in which a disturbance is most likely to gain access to the electronic equipment.

Copyright © 2006 IEEE. All rights reserved.

An example of mutual inductance is a two-winding transformer in which energy is transferred from one winding to the other by a common magnetic field. The windings are said to be *magnetically coupled*. Figure 4-11 shows the magnetic flux that couples the two windings as φ_m. Two-winding transformers often have an iron core to increase the energy that can be coupled from one winding to the other. The iron core is not a requirement for magnetic coupling to occur, however, as two circuits consisting of a single loop of wire each can couple magnetic energy through the air. Most magnetic coupling occurs at low frequency (such as 60 Hz or its harmonics).

With mutual capacitance, the energy is transferred via an electric field. Transients and interference most commonly couple between circuits in this manner. In the early days of telephone, this was a very common problem; the telephone line and the power line would share common poles and run for a considerable distance together. Interference, called *noise* because it caused a hissing sound, would capacitively couple into the telephone signal from the power line. Capacitive coupling commonly occurs at higher frequencies (kilohertz or megahertz).

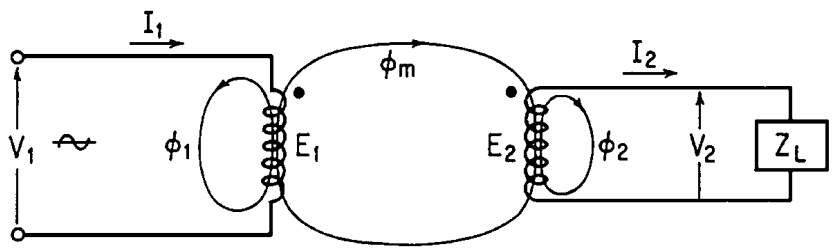

Figure 4-11—Transformer magnetic coupling

4.4.2.1 Free-space coupling

Free-space coupling occurs when electromagnetic energy moves through the air from one circuit into another. It can occur as described in 4.4.2, with capacitive or magnetic coupling. This is considered the "near field" as both circuits are in close proximity to each other.

Free-space coupling can also occur over large distances; this is referred to as the *far field*. Examples of free-space coupling in the far field are TV and radio broadcasts. Electromagnetic energy is coupled by an antenna (or something, such as a piece of wire, acting as an antenna) into free space (the air). This would be considered the "transmitter." The "receiver" couples the electromagnetic energy from free space into a circuit. It also uses an antenna or something acting as one. The frequency of the signal is an important factor for electromagnetic energy to radiate into free space. Electromagnetic energy begins to radiate well in the range of radio waves, which starts with kilohertz and progresses into megahertz.

4.4.2.1.1 Inductive (magnetic) coupling (near field)

Electronic circuits that are physically near, but not in direct contact with, a surge path can experience interference with signal processes and even damage without flashover (discharge) occurring. This occurs due to inductive coupling in the near field between the victim circuit and a nearby aggressor conductor of any type that is producing magnetic flux lines generated in direct proportion to the magnitude of current flow in it.

In most cases the foregoing aggressor conductor is not coiled into a multi-turn inductor, but is a single conductor that is routed parallel to the victim conductor. However, coiled conductors are possible and must be allowed for. The general equation for determining the magnetic field strength in air (or any nonpermeable medium) is shown in Equation (4.2).

$$H = \frac{I \times N}{2\pi r} \tag{4.2}$$

 Copyright © 2006 IEEE. All rights reserved.

where

H is the magnetic field strength in A/m
I is the current in amperes
N is the number of turns (1 turn for straight wire)
r is the radius of circle from conductor's center (1 m for a straight wire)

4.4.2.1.2 Magnetic field strength around a conductor in free space

Due to the high di/dt characteristic of surges, concurrently high $d\phi/dt$ rates for magnetic flux are also produced. This then affects the magnitude of the voltages that can be electromagnetically induced on any nearby conductors. This effect is depicted in Figure 4-12, for the case of surge current on the down conductor of a lightning-interception system. In summary, the voltage induced into the adjacent victim circuit (loop) is a function of the following:

a) Its geometry as it relates to the area ($A = d_2 \times L$) enclosed by the victim loop
b) Its orientation (e.g., parallel to or at some other angle) to the aggressor source for coupling purposes
c) Its distance from the down conductor
d) The time rate of change (di/dt) of the surge current, which produces a related high rate of change (d/dt) for magnetic flux

NOTE—Enclosed loop area = stray or deliberate coupling mechanism.[3]

Figure 4-13 plots normalized induced voltage per unit of length (l) developed in a circuit having various loop geometries.

This general unwanted coupling of EMI energy into circuits is possible whenever any set of similar conductors, with one conductor carrying the initial EMI currents, is in close proximity. This is important since near-field magnetic intensity is subject to cube- and square-law rules. For example, the intensity of the H-field between very nearby conductors increases or decreases according to the cube of the distance between them, and for most other wider spacings, the intensity of the H-field is related to the square of the distance between them. Using square law is generally suitable for most H-field intensity estimates in real-world building wiring situations.

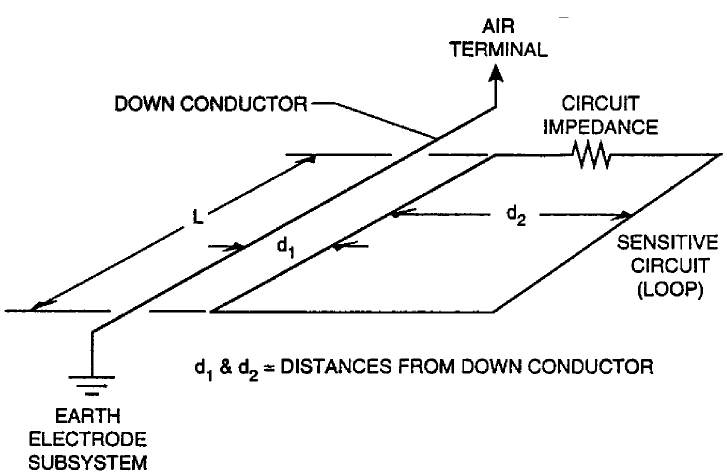

Adapted from MIL-HDBK-419 [B46] and MIL-STD-188-124A [B47].

Figure 4-12—Inductive coupling of surge current to adjacent circuits

[3]Notes in text, tables, and figures are given for information only and do not contain requirements needed to implement the recommended practice.

Copyright © 2006 IEEE. All rights reserved.

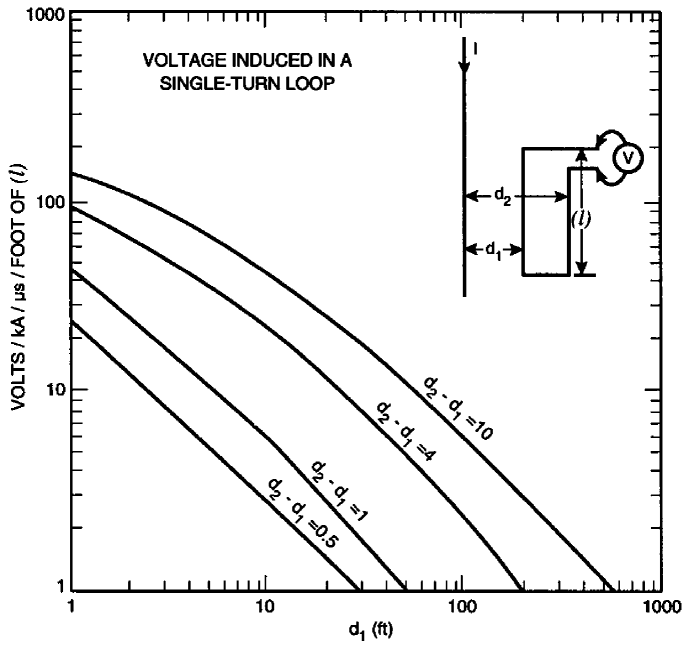

Adapted from MIL-HDBK-419 [B46] and MIL-STD-188-124A [B47].

Figure 4-13—Normalized induced voltage into circuits (from a single-turn enclosed loop)

As shown in Figure 4-13, the total loop area in meters squared (m^2) (A = length · width) enclosed by either of the circuits is a very important parameter, i.e., more enclosed loop area means more coupling problems. More aggressor loop area means more available coupled energy being put into the near field and more victim loop area means more victim conductor interference pickup in the near field.

In addition to simple nearness of the aggressor and victim loops, coupling is maximized when the enclosed loop areas are parallel to one another. Also, as the loops are positioned at right angles to one another, the coupling is minimal. Geometries between 0° and 90° cause proportionally reduced or increased coupling effects to occur.

The voltages magnetically induced into circuits are not a function of the circuit impedance; therefore the magnitudes of induced voltages are the same for low- and high-impedance circuits. This fact can be particularly problematic for low-impedance circuits and any circuit without surge protection. However, since H-field coupling problems may involve high currents and low voltages, most types of SPD equipment will not have much beneficial effect since it will not operate until a particular voltage threshold has been passed. This is very important to understand. Instead, simple inductances used as chokes become the preferred means of limiting currents in the H-field mode since these devices are current and rate of change for current activated, not voltage activated.

In further explanation, the relationship between aggressor and victim loop actions can be thought of as being similar to that of an air-core transformer where the aggressor circuit is the primary winding and the victim circuit is the secondary winding. Of course, multiple victim "secondary windings" are possible in real-world situations. This explanation can be extended to note that for the most part, the voltage produced in the victim "secondary winding" is not affected by the impedance connected across it to form a "load." Current then becomes the variable in this regard as the load impedance is changed and the voltage applied remains fairly constant. This is easy to visualize if one considers that a 12 V ac secondary on a transformer is typically just that, even with various loads connected across it. Hence, this kind of coupling produces fairly constant

 Copyright © 2006 IEEE. All rights reserved.

voltage conditions and variable load currents—both a signature of a low-impedance EMI source-load arrangement where high currents and low voltages are the norm.

From this it should be appreciated that test and troubleshooting efforts will not fare well if voltage indicators are used instead of current indicators. Therefore, most successful efforts involving H-field problems will involve wide-band current transformers (CTs) and not voltage probes. Note that the typical CT is a closed-loop system from a magnetics standpoint, so the CT will normally reject H-field influences that do not pass directly through the CT's aperture. However, if any air gap is allowed to exist at the point where the CT's jaws contact while closed, the CT will no longer act in a closed-loop fashion, but will act largely like an inductor—ready to be unwantedly affected by impinging H-fields from external sources.

4.4.2.1.3 Capacitive (electrostatic) coupling (near field)

Capacitive coupling of EMI energy is an electrostatic phenomenon. It occurs between the metallic portions of circuits that are insulated from one another by a dielectric, such as air or any other insulating medium. Parameters of interest are spacing, mutually exposed area, and dielectric constant between the source and the circuit (see *Radio Engineers Handbook* [B50]). Capacitive coupling occurs due to the effects of the E-field developing charge across the dielectric medium. The principal EMI effects are those produced by electric potential (voltage) as opposed to current flow.

In general, E-fields are coupled between the aggressor source and victim circuit pathways in a manner that is fairly easy to shield. Typical techniques usually involve using simple grounded metal shields. Such shields may be made from thin metals (e.g., foils) since they normally are not called upon to carry any rms currents. Electric field shielding may be thought of as being akin to providing shading from a light source, except that the shield must be fully enclosing to completely do the job.

EMI coupling levels to the victim circuit are dependent upon the amplitude and rate of change of the voltage in the aggressor E-field, the coupling capacitance between the aggressor and victim circuits, stray (e.g., parasitic) capacitance between circuit elements in the victim circuit itself, and most importantly, the impedance of the victim circuit itself.

Accordingly, victim circuits of low impedance are generally not much affected by E-field EMI, but high-impedance circuits are. This occurs because the former are generally current driven while the latter are voltage driven, and voltage is exactly what the E-field couples using capacitance between the aggressor and victim circuits.

Note that the amount of EMI in the form of an interfering electric charge (Q) that an aggressor E-field can impart to a victim circuit at a given potential between the two is directly proportional to the product of capacitance and voltage ($Q = CE$).

Also, since capacitive reactance (e.g., X_c in ohms) is inversely proportional to the E field's frequency, high-frequency E-fields produce greater EMI problems for a given capacity between the aggressor and victim circuit. With lower values of X_c, greater amounts of EMI current can be transported between the aggressor and victim circuit per volt of E-field.

E-field EMI is not to be confused with ESD phenomena since with E-field EMI no discharge arc is involved. With ESD, there is often definite current flow between the aggressor and victim circuit that involves a conductive path via an electric arc. This is not the case with E-field EMI.

4.4.2.2 Far-field (electromagnetic) coupling

For victim circuits, far-field coupling of electromagnetic energy occurs when the circuit acts as a receiving antenna for incident electromagnetic energy (see Blake [B4]) arriving in the form of a radio wave that contains both E-field and H-field components that are rotated 90° apart.

Copyright © 2006 IEEE. All rights reserved.

In far-field EMI problems, the aggressor circuit itself is not necessarily the source of the radio-frequency (RF) energy identified as EMI, but the antenna from which this energy is being radiated always is. At first glance this seems to be a subtle difference, but in fact it is not. For example, a circuit may be a prolific generator of RF fields, but if these fields cannot be effectively radiated into the environment by an antenna, there is no practical EMI problem except possibly within the equipment where the RF is being generated, and possibly for intended purposes.

EMI currents or voltages induced into victim circuits from an electromagnetic wave increase with the intensity of the electromagnetic field (e.g., RF field strength, as typically measured in μV/m at a given frequency) in the immediate vicinity of the victim circuit and with the victim circuit's effectiveness as a receiving antenna. This latter point is very important since it underscores how an otherwise relatively EMI-immune victim circuit can be affected if it is connected into the external environment by a power, grounding, or signal conductor that can act as an EMI antenna that efficiently transports overwhelming amounts of EMI into victim equipment.

The unwanted effects of RF EMI into the victim circuit are typically exacerbated when the victim circuit itself, or its interfacing power, grounding, or signal wiring, exhibits conditions of resonance at the interfering field's frequencies. Since a great deal of personal communication equipment now operates over the entire range from around 150 MHz to about 1.2 GHz, this can be a critical problem where small lengths of conductors can act as very efficient radiators or receptors of EMI. For example, electrical half-waves occur on conductors in free space at approximately 1 m (3.28 ft) at 150 MHz and 0.125 m (0.41 ft) at 1.2 GHz, and quarter-waves occur at one-half of each of these lengths.

The strength of the RF field involved in the EMI is an inverse-law function of the cube or square of the distance from the radiating source. Very close to the radiating source the cube-law function applies and further away the square-law function is applicable. The victim circuit's effectiveness (e.g., efficiency) as an antenna depends on its electrical length relative to the wavelength(s) of the EMI signal(s), its total enclosed area (e.g., EMI signal capture area), and its physical orientation to the EMI source (e.g., polarization and parallelism).

4.4.3 Interaction with buried cables

Analysis and measurements of transient voltages induced into buried cables (see Boyce [B6] and Sunde [B57]) indicate that surges are a function of the cable's electrical and physical construction parameters, depth of the cable(s), soil resistivity, cable terminations, and the additional degree of shielding provided by buildings, water pipes, power lines, and other nearby conductors.

Cable parameters of importance are the cable length, the "transfer impedance" of the cable's shield (if so equipped), and the dielectric strength of the insulating jackets (see Nordgard and Chen [B48]). Soil resistivity is also important in determining the magnitude of surges induced by lightning. Nordgard and Chen [B48] and Sunde [B57] indicate that the peak transient voltages and currents are approximately proportional to the square root of the soil's resistivity.

Deeply buried cables generally suffer less from the direct effects of lightning strikes, due to greater attenuation of the surge's higher frequencies near the earth's surface. Similarly, guard wires above buried cables can be effective in reducing the impact of ground currents.

The earth itself is not known to be a low-loss medium of fixed resistivity for all frequencies of current flow within it. Typically, ac earth currents cannot flow without producing substantial voltage drop and associated falloff of current both as a function of distance and of the frequency of the current. This occurs since all types of earth appear to exhibit increasingly greater amounts of *IR* loss within it as the impressed current's frequency rises. Hence, dc and ac of lower frequency will not only penetrate more deeply into the soil from a point of injection or return, but will suffer less attenuation over a given path's distance than will higher frequency ones. Hence for a given ac voltage, the produced current in and through the earth will be

 Copyright © 2006 IEEE. All rights reserved.

transported with less loss over a given path distance at 60 Hz (and the first several harmonics thereof) than will a lightning current which is comprised of frequencies in the range of tens of kilohertz to tens of megahertz. DC will be transported over the greatest path distance with the least loss of all.

Lightning, however, typically makes up for this seeming discrepancy by the sheer amount of voltage applied to the earth during a strike so that more amperes are initially produced at the point of current injection than is possible with most 60 Hz systems.

The foregoing is important in that a conducted current flow in the earth itself produces both an E- and H-field proportional to voltage and current along the path of current conduction in earth, and these fields are capable of creating EMI problems with any cables buried in the earth where these fields can impact the buried cable. In extreme cases, the associated E-field is known to produce localized points of dielectric breakdown along the victim buried cable. Such breakdown points are also often characterized by predictable spacing at quarter-wave points along the damaged cable, when high-frequency currents are involved, such as from a lightning strike.

4.4.4 Interaction with above-ground conductors

The use of aerial conductors to intercept lightning strikes and protect cables below them from the direct effects of lightning has been well demonstrated. Several theories have been developed to explain the size of the protected zone. They are reviewed in Golde [B16]. Use of these concepts can reduce both the voltage and current surge levels that aboveground power and signal lines experience for a given lightning strike.

Lightning-generated surges on the electric power supplier's ac distribution systems, and at the user's site, have been studied extensively and have been reported in the literature. Golde [B16] and Vorgucic [B68] are examples of these studies. Golde and Keeling [B33] also provide a history and bibliographies of the problem and a summary of measurements and operating experiences pertinent to remote ac distribution lines. The types of damage observed and the surges measured at distribution terminals are also discussed. Protection strategies for terminal equipment have been well developed and consist of surge current diverters and/or grounded overhead guard wires. Good earth ground electrode systems, of low-inductance design at the points of surge-affected conductor interface to or from a building or other structure, are generally important in obtaining maximum protection from the protection strategy chosen at a given location.

Elevated conductors (ac distribution, etc.) form geometric loops of various sizes and orientations with varying degrees of surge-current coupling efficiency. As a general statement, the open-circuit voltages induced in these loops are a function of loop size and the time rate of change of the magnetic flux through the loop cross-sectional area (see Golde [B16]). Therefore, the peak open-circuit voltage is dependent on the peak rate of change of the strike current. The resulting voltage waveform is determined by the time derivative of the strike current.

In general, induced voltage waveforms on overhead conductors (that result from lightning strikes) are a quick unipolar pulse followed by a long decaying tail. Peak currents in these loops can be theoretically bounded by considering the load to be a short circuit.

4.4.5 Potential impact of EMI

Depending on the severity of the surge and the susceptibility of the equipment, three types of occurrences are possible (in addition to damage caused to cables and conductors): data disruption, hardware stress, and hardware destruction.

4.4.5.1 Type-I, signal-data disruption

Signal-carrying circuits are susceptible to surge interference via conduction, inductive and capacitive coupling, and electromagnetic radiation. Both near-field and far-field phenomena affect these circuits as

Copyright © 2006 IEEE. All rights reserved.

EMI. When surges are actually observed on signal lines, it is often assumed, just because the signal circuits are still working, that the noise is below the circuit's EMI threshold, and things are therefore acceptable. This is not so (see Greason [B19]), as explained in the following paragraphs.

Digital circuits characteristically latch in either a "high" or a "low" state in which they are relatively stable (e.g., they are in a full cutoff or saturated full-on state). Therefore, it takes a strong randomly applied signal to upset a fully latched circuit from one state to the other. Moreover, since most such circuits spend most of their working life latched into one state or the other, they spend very little time in transition between states where they are most susceptible to EMI.

However, when a bistable circuit is in transition between states, it is very susceptible to interference since it is operating in the Class-A region. The circuit behaves as a positive feedback amplifier and can amplify very weak signals to the point of saturating its switching semiconductor. Thus, even very low-magnitude surges can cause data corruption or upset if they occur at the moment of a deliberately induced state transition. A surge arriving at this time has a 50/50 chance of driving the circuit in the opposite direction to that which was intended, causing a data error by changing the digital signal from its intended "high" or "low" state. These data errors may be immediately obvious or may only be evident under a unique set of logical and programmatic conditions that occur infrequently—sometimes only once or twice daily, or weekly, etc. Coincidence between a state transition[4] and an EMI event is therefore what determines the frequency of problems at a given site and not just the mere presence or absence of EMI on the signal path when it is observed during a limited period of examination.

When recorded line-voltage disturbances coincide with computer malfunctions, it is often assumed that the line-voltage change was responsible for the malfunction. Although this is a possibility, a more likely cause is the secondary effect of a rapid change of current in ground conductors that creates surge voltages among different parts of the common ground referencing system interconnections rather than filtering the surge from its supply voltage (see FIPS Pub 94).

For one example of the foregoing, the presence of original equipment manufacturer (OEM) installed, low-pass, LC network filters with line-to-ground/chassis-connected shunt elements (e.g., capacitors) ensures that some portion of the current from any ac line disturbance is conducted to or from the equipment grounding system associated with the subject electronics equipment and its associated ac power system. This is especially the case with common-mode disturbances that occur on the ac power system.

The foregoing is especially important to appreciate since almost all commercially available equipment using digital logic designs, and for purposes of both enhanced performance and safety, references one terminal of the logic voltage power supply to the equipment's frame/ enclosure as "ground"—a point that is also common to the ac system's equipment grounding conductor (EGC) system and the LC filters as just described. Hence, unwanted currents on the equipment grounding system have ingress to the logic elements via the indicated OEM provided path. From this point, the unwanted currents in the form of EMI can be propagated between items of equipment via the typical cabling systems used to provide inter-unit transport of power, signals, data, or combinations thereof.

In such unusual (and typically undesirable) cases where the above conductive path between the logic power supply's conductors and the equipment's metal frame/enclosure is not provided due to dielectric isolation, then stray or parasitic reactive coupling is usually sufficient between the frame/enclosure and the power supply and signal leads in the equipment to provide for a nearly equivalent path to exist. This is important since it goes to the heart of why floating or otherwise isolated grounding (IG) systems rarely (if ever) provide the anticipated protection from EMI that is involved with the equipment's grounding system, and which is occurring at high frequency within the response bandwidth of the victim circuits.

[4]Typically, this means at equipment "clock time" where the state of the latched circuit elements are all permitted to be changed if the gating conditions are correct.

 Copyright © 2006 IEEE. All rights reserved.

For a variety of reasons, many electronic loads contain amplifiers that are routinely used to amplify the clock and data signals. Any unwanted signal (i.e., noise) entering the input to such amplifiers, where that noise signal is completely or partially within the amplifier's bandwidth, is amplified along with the desired signals. Once this happens, the unwanted, amplified noise signal is distributed within the system in a stronger form than when it entered. About the worst scenario possible is when the noise signal is combined with the clock signal and both are amplified and distributed throughout the electronic system. This situation makes the noise appear to come from everywhere so it is very difficult to track the point of origin, and it also makes the noise available to a wider range of circuits that then can be affected by it.

4.4.5.2 Type-II, gradual hardware stress and latent failures

A single lightning or switching surge often causes immediate, but not readily apparent physical damage to semiconductor devices. This damage then finally appears at some later time at which point the failure is obvious. This once controversial, but now accepted condition is called *latent semiconductor device failure.* For example, a single larger surge or several repetitive exposures to lower magnitude surges often cause a gradual performance deterioration, which may finally be associated with intermittent equipment operation as opposed to immediate catastrophic failure of the semiconductor device. In such cases where the semiconductor itself has had its performance marginalized, it is often difficult to differentiate between software- and hardware-induced errors.

Latent failures relating to ac power and grounding surge conditions are observed primarily in semiconductor devices used in equipment interface applications or power supplies, but may also generally occur in insulating materials as are used in transformers, chokes, capacitors, etc.

After repeated stress and when overstressed, typical forms of SPDs such as gas tubes, carbon blocks, Zener diodes, silicon avalanche diodes, and varistor elements are also susceptible to Type-II damage over time—particularly if they have not been very conservatively rated for the intended application.

4.4.5.3 Type-III, immediate hardware destruction

The third possible impact of surges is the immediately obvious and total destruction of hardware components in a single incident. Table 4-3 shows the threshold voltages and energy levels for destruction of selected semiconductors that are commonly used in electronic equipment (see Gallace and Pujol [B15] and Greason [B19]). Similarly, larger devices, such as signal and power transformers and relay coils, and power supply components, such as chokes and capacitors, can be destroyed. Type-III events also include general arc-over damage within equipment.

4.4.6 Surge voltage frequency and transmission path losses

Knowledge of the frequency distribution of voltage (or current) within surges can be important in assessing their impact on electronic equipment. Depending on the surge wave shape, its voltage and current spectra, $V(\omega)$ and $I(\omega)$, can vary considerably. The effective propagation of current surges having high-frequency components requires paths that are of low loss and impedance at the same high frequencies.

Typical building power wiring paths are transmission lines that are lossy and are widely thought of to possess a non-uniform but roughly 50 Ω characteristic impedance. Such building wiring transmission lines for surge currents at high frequency have been shown by Martzloff [B39] to be both lossy and capable of transporting a harmful surge current between the point of injection to the victim equipment attached as a load. This typically occurs where a sufficiently large surge current is injected into the wiring system so that after path losses occur, a destructive amount is still present at the end of the wiring path where the victim equipment is connected.

Copyright © 2006 IEEE. All rights reserved.

Table 4-3—Thresholds of failure of selected semiconductors

Semiconductor device type	Disruption energy (J)	Destruction energy (J)
Digital integrated circuits	10^{-9}	10^{-6}
Analog integrated circuits	10^{-8}	10^{-6}
Low-noise transistors and diodes	10^{-7}	10^{-6}
High-speed transistors and ICs	10^{-6}	10^{-5}
Low-power transistors and signal diodes	10^{-5}	10^{-4}
Medium-power transistors	10^{-4}	10^{-3}
Zeners and rectifiers	10^{-3}	10^{-2}
High-power transistors	10^{-2}	10^{-1}
Power thyristors and power diodes	10^{-1}	10^{0}

In addition, even with lossy pathways at high frequency, the typical impedance mismatch between the transmission line (e.g., building wiring circuit) and the terminating equipment (e.g., electrical or electronic) can allow for surge current voltage or current reflections to occur at the point of impedance mismatch and which can then create a doubling of the incident waveform's amplitude at one or more points on the pathway—particularly at the point of wiring interface to the load equipment. This is a well-understood phenomenon, described in FIPS Pub 94, on the electric supply grid where a radial distribution system ends in an unterminated stub. The problem is that the effect also occurs within buildings and on the interior wiring systems serving electrical and electronic load equipment.

Figure 4-14 depicts the frequency spectra (Fourier transforms) of five standard surge voltage waveforms (see IEEE Std C62.41, IEC 60801-4:1988 [B27], and Standler [B55]). The 0.0 dB reference level is 1 V or 1 A. The peak voltage is 6 kV for both the 1.2/50 µs and 100 kHz ring wave, 4 kV for the EFT and the 0.6 kV for the 10/1000 µs surges, respectively. The peak current is 3 kA for the 8/20 ms surge. Figure 4-14 indicates that most of the commonly utilized surge spectra have relatively large voltage (current) components between dc and 100 kHz. The shorter first-transition time surges (e.g., EFT) have larger fractions of their total energy content at higher frequencies.

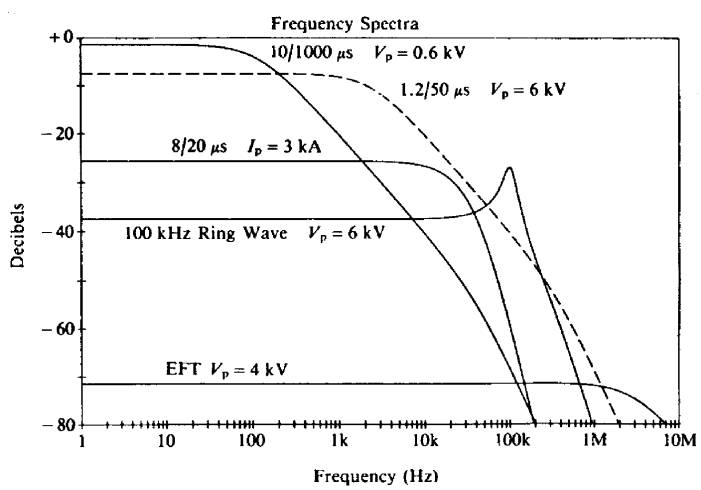

Reproduced with the kind permission of the copyright owner, Dr. Ronald B. Standler.

Figure 4-14—Frequency spectra of common surge test waveforms (see Standler [B55])

 Copyright © 2006 IEEE. All rights reserved.

4.5 Steady-state voltage/current wave shape distortion

Distortion is a term that can be applied in many areas of electrical engineering, such as sound amplification. When the sound coming out of the speaker is not exactly the sound that went into the microphone, there has been some amount of sound distortion.

In the field of power quality, *distortion* most commonly refers to wave-shape distortion of an ac voltage or current. The electric power supplier generates a nearly perfect sine wave of ac voltage. Somewhere in the electrical system and/or at the load, the voltage and/or current becomes distorted and is no longer a sine wave.

Harmonic analysis is the most common method used to quantify the wave-shape distortion. It provides a mathematical model that can be used to predict what effect the distortion may have on the electrical system and/or load and is also used in designing and implementing solutions to the problems the distortion creates.

4.5.1 Fourier analysis

The concept of harmonic analysis comes from the mathematical theorem developed by Jean Babtiste Joseph Fourier, a French mathematician. It states that any periodic function may be represented by an infinite series of sine and cosine functions at multiples of a fundamental frequency. This is called a *Fourier series.*

Since sine and cosine waves can be combined into sine waves with a phase shift, one of the most common forms of a Fourier series is as shown in Equation (4.3):

For any function of time *f(t)*:

$$f(t) = a_O + \sum_{n=1}^{\infty} C_n \sin(n\omega t + \theta_n) \tag{4.3}$$

Where C_n is the magnitude and θ_n is the phase angle of each of the n harmonic frequencies, and $\omega = 2\pi f$.

For power engineering in the U.S., the fundamental frequency (f) is 60 Hz, and it has harmonic frequencies such as the third harmonic, 180 Hz, and a fifth harmonic of 300 Hz, etc.

Many of the power monitors that provide harmonic analysis utilize this form (or an equivalent one with cosine waves and a phase shift) of the Fourier series. The magnitudes are often listed as percent of the fundamental, and the zero reference used for θ_n is A phase voltage.

It is important to note that *harmonic analysis*, which is *Fourier analysis*, is a *mathematical model* of the voltage or current. The "distorted wave shape" is what is actually flowing in the circuit, not a group of sine waves of different frequencies. It may provide insight to look at the individual pieces as long as the "big picture" is not lost in the analysis. For example, harmonic filters can be designed to have low impedance to a particular frequency, but do not forget that the actual filter is going to experience the whole wave shape and therefore may have significant currents at other frequencies than the one it was designed for.

4.5.2 Wave-shape distortion—Sources and characteristics

4.5.2.1 linear and nonlinear loads

A linear load is a load in which the current flowing is in direct proportion to the applied voltage, as shown in Figure 4-15. Resistors, inductors, and capacitors are linear loads. With inductors and capacitors, there is a phase shift between the voltage and current, but that does not change the fact that they are proportional. If the voltage increases 10%, so does the current.

Copyright © 2006 IEEE. All rights reserved.

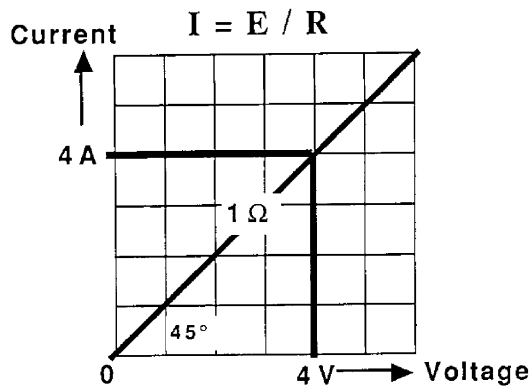

Figure 4-15—Graph of voltage vs. current at a constant load impedance

NOTE—A linear load produces a proportional result for all points plotted on the $I = E/R$ curve.

When the input voltage is translated across a 45° line of reflection, as shown in Figure 4-16, the resultant wave shape for the current is exactly the same as for the wave being used as the input voltage. No harmonic distortion of the wave occurs in this case using a linear load and sinusoidal voltage waveform.

However, when the load does not proportionally draw current in relation to the applied voltage over the entire period of the sinusoidal voltage waveform, it is termed nonlinear. Rectifiers and silicon-controlled rectifier (SCR) controlled loads are two common examples of nonlinear loads. Figure 4-18 shows an example of how a nonlinear load would draw a current that had a distorted wave shape in spite of being supplied by a sine wave of voltage. In this case, the impedance of the load does not remain constant over the entire range of the applied voltage waveform, but changes according to the characteristic curve shown in the figure. This results in a harmonically distorted current waveform for that current being drawn from the supply source by the nonlinear load. An example of this is shown in Figure 4-17, where a nonlinear load's characteristic impedance is plotted as a curved (e.g., nonlinear) reflection line across which the applied sinusoidal voltage and resultant harmonically distorted load current waveform's shape can be determined. This is contrasted to the equivalent diagram for a linear load as shown in Figure 4-15, where it can be seen that an applied sinusoidal voltage waveform results in a sinusoidal current waveform for the current flowing through the linear load.

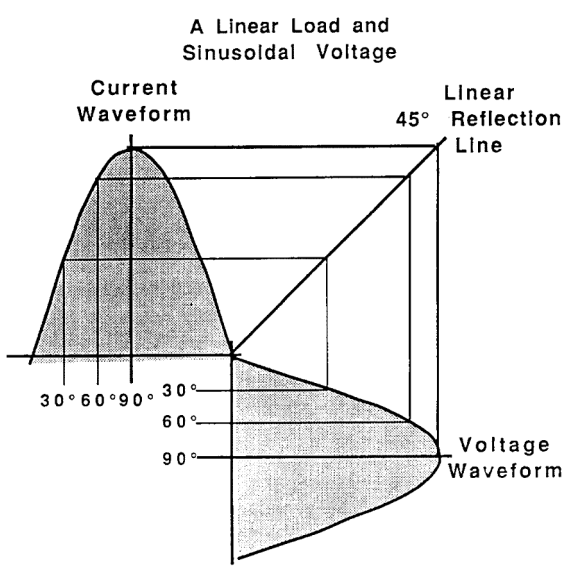

Figure 4-16—Sinusoidal current waveform shape resulting from a linear load

 Copyright © 2006 IEEE. All rights reserved.

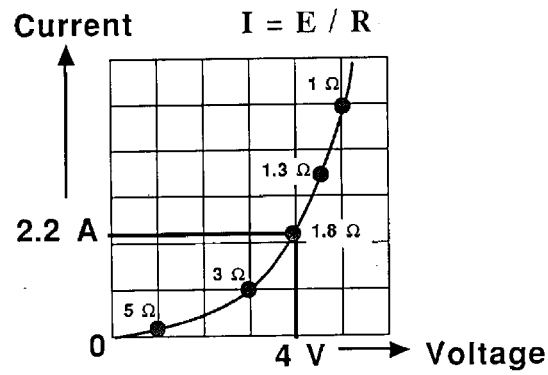

Figure 4-17—Graph of voltage vs. current at a variable load impedance

NOTE—A nonlinear load produces a nonproportional result for points plotted on the $I = E/R$ curve.

If a harmonically distorted voltage waveform is applied to a linear load, it will result in a corresponding amount and type of harmonic distortion for the load current's waveform. This is a function of the wave shape of the applied voltage across a constant impedance load. But, if a nonlinear load is used with an already harmonically distorted voltage waveform, the resultant distorted current caused by the distorted voltage waveform may be in addition to the waveform from the current that is related to the load's intrinsic nonlinearity. Therefore, a new, composite current waveform with more (or possibly less) harmonic distortion will be the result.

The effect of nonlinear loading can be modeled by adding one or more dependent current sources to the electrical system that produce characteristic harmonic current flow on and within the supply system wiring between the source and the nonlinear load. (See Figure 4-19.)

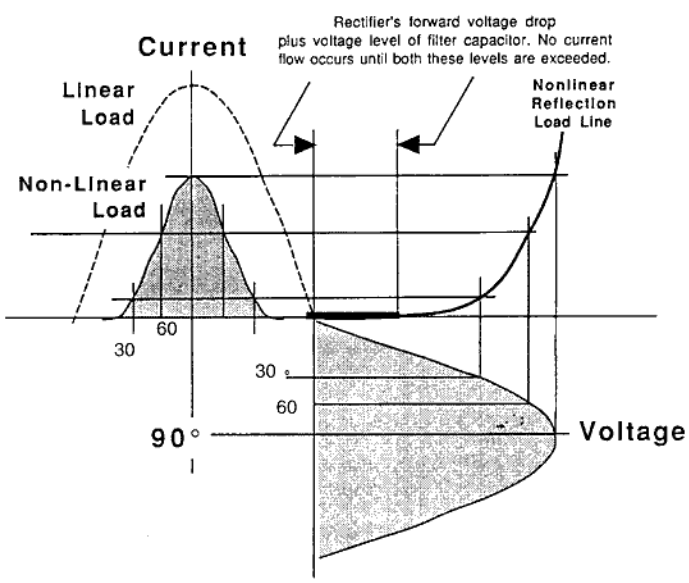

Figure 4-18—Resulting distorted current wave shape resulting from nonlinear load

Copyright © 2006 IEEE. All rights reserved.

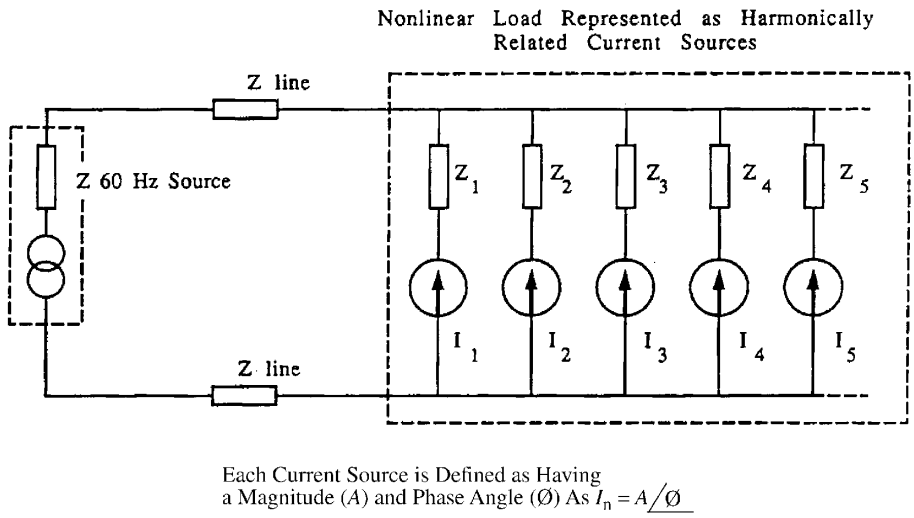

Figure 4-19—Nonlinear load modeled as a group of harmonically related current sources connected in parallel across the supply source of fundamental frequency

When harmonic currents from nonlinear loads flow through the internal impedance of the ac supply itself, a voltage drop (e.g., $E = IZ$) is produced across the supply's internal impedance for each harmonic current, in addition to that occurring from fundamental current. The amount of voltage drop in the internal impedance is proportional to the impedance presented by the internal reactance of the supply's windings at each harmonic frequency, and in relation to the amount of current flow at each frequency. Therefore, on a per-ampere basis, 1 A of 3rd harmonic will produce approximately three times the voltage drop that 1 A of fundamental current will, and so on. Also, since the reactance in the power source's windings presented to each harmonic current is different as a function of frequency, the produced *IZ* drops are normally not in phase with the fundamental voltage and current waveforms, and a phase shift results that is unique to each harmonic. In other words, each harmonic will have its own displacement power factor, as will the fundamental.

The resulting voltage drop occurring within the ac power source from the harmonic currents flowing through it is algebraically added to the intended fundamental voltage being produced in the same winding. This produces a harmonically distorted voltage waveform from the power source, which is then applied to all connected loads—linear and nonlinear alike. Hence, the need for a low-impedance power source used in conjunction with nonlinear loads is somewhat self-evident if the propagation of nonlinear voltage waveforms on the entire downstream wiring system from the power source is to be minimized.

In addition to the harmonic currents producing voltage drops within the ac power source's internal impedance, the same effect occurs on the impedance of all the intervening wiring between the power source and the nonlinear load(s) connected to it. Hence, with the nonlinear load viewed as a harmonic current source, the amount of harmonic voltage distortion produced by it on the wiring system will be seen to increase as connections are made closer to the nonlinear load, and to diminish as the connection moves upstream to the ac power source (see Figure 4-20). The ac power source will then be the point on the wiring system at which minimum harmonic voltage distortion will be seen to exist.

 Copyright © 2006 IEEE. All rights reserved.

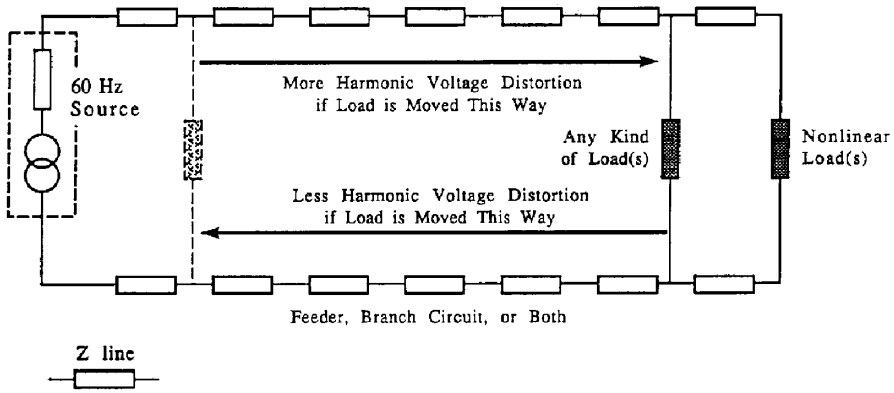

Figure 4-20—Load connected across a power system serving nonlinear loads

NOTE—The load experiences the least amount of voltage waveform distortion when connected close to the source of power and the most distortion when connected near the nonlinear load(s).

The harmonic currents discussed previously are also known to interact with the capacitive and inductive reactances that exist on the power system. If the ratio of capacitance and inductance is such to excite power system resonances, excessive voltages or currents on the system may be produced which then stress various power system components connected on the same ac distribution system. In particular, power factor correction capacitor banks are of the most concern in these cases, and they may be both the culprit and victim at the same time. Harmonic disturbances and proposed limits on them are discussed in detail in IEEE Std 519™-1992 [B30].

Most electronic loads exhibit nonlinear characteristics. AC-DC power supplies using simple across the line, full-wave diode-input rectifiers and large dc filter capacitors are common examples of this type of load (e.g., the SMPS). More sophisticated ac-dc power supplies now exist with improved input power factor and greatly reduced harmonic current demands. The ac-dc power supplies are becoming available primarily as a result of industry interest and the harmonic current limits suggested by IEC 60555-1:1982 [B24], IEC 60555-2:1982 [B25], and IEC 60555-3:1982 [B26], but the cost per watt is more than for unimproved types. This latter fact is slowing the introduction of these newer designs into the market, and there is still a very large number of the older types of supplies still in use and which will be in use for the foreseeable future—especially where initial cost is of most importance to the purchaser.

Exact analysis of ac-dc power supply input current vs. applied voltage is complex, but it can be said that a load current flows nonlinearly during the ac cycle (see NFPA 75 and Arrillaga et al. [B3]). For example, there is no appreciable input current flow until the rectifier begins to conduct current at the point where the applied input voltage exceeds the existing voltage in the filter capacitor plus the forward voltage drop of the rectifier(s). Hence, charging current flows in pulse fashion with the peak current being drawn at approximately the 90° and 270° points on the applied voltage waveform, as shown in Figure 4-21. The duration of current flow (each half-cycle on each phase) can be described in terms of the conduction angle for switch-mode power supplies and is 30° to 60°. Typical current crest factors range from 2 to 3 (vs. 1.4 for a linear load fed by sinusoidal ac power). Figure 4-22 shows the harmonic current spectrum for a typical SMPS.

Table 4-4 shows an example of the harmonic current content of a balanced delta and wye rectifier diode-capacitor power supply in a three-phase power system.

Copyright © 2006 IEEE. All rights reserved.

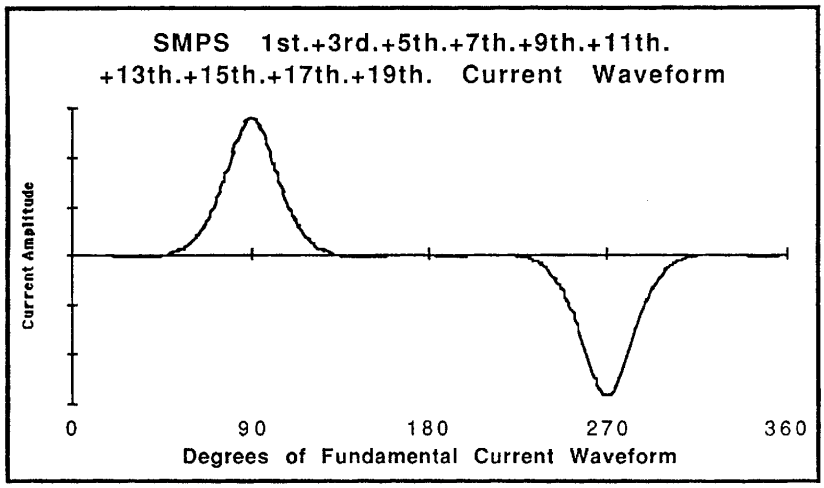

Figure 4-21—Nonsinusoidal ac input current to a typical SMPS with peaks occurring at 90° and 270°

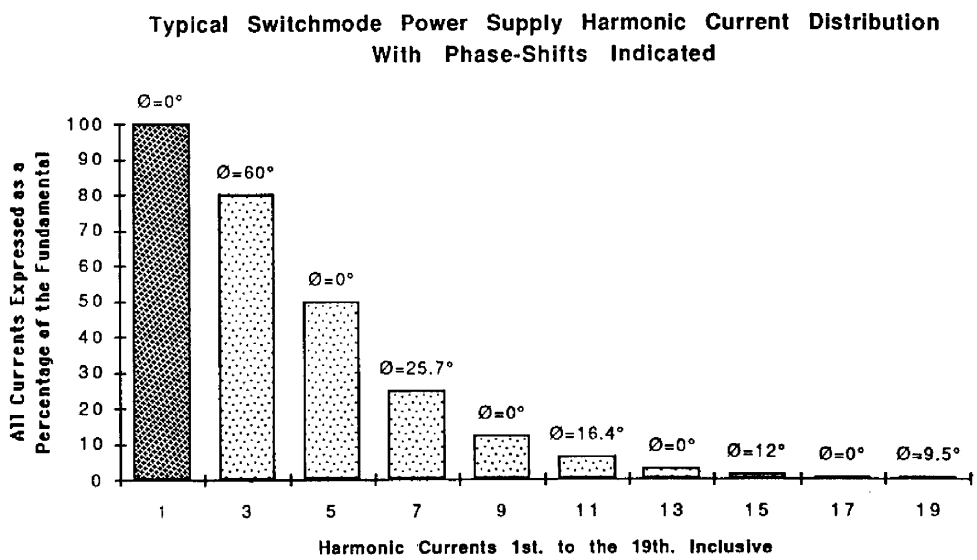

Figure 4-22—Frequency domain display of input current to typical SMPS, both amplitudes shown at each harmonic and phase angle

 Copyright © 2006 IEEE. All rights reserved.

Table 4-4—Example input harmonic current distortion in balanced three-phase circuits due to rectifier-capacitor power supply

Harmonic number	Delta harmonic current[a]	Wye harmonic current[a]
1	0.82	0.65
3	—	0.52
5	0.49	0.42
7	0.29	0.29
9	—	0.13
11	0.074	0.12
13	0.033	0.098
Total phase current	1.00	1.00
Neutral current	0.0	1.61

[a]Normalized to phase current.

4.5.2.2 Power factor, linear and nonlinear loads

Reactive loads that are linear, such as ac motors, low-pass LC power filters, and other reactive components within loads, normally cause non-unity total power factor to occur per Equation (4.4). When nonlinear loads are being considered, only the second part of the equation is valid; the power factor is no longer equal to the cosine of the angle between the voltage and current. Frequencies other than the fundamental are present in both the voltage and current waveforms at the same time.

$$PF_t = \cos\theta = \frac{P}{P_s} = \frac{\text{Active power}_{\text{kW}}}{\text{Apparent power}_{\text{kVA}}} \tag{4.4}$$

where

PF_t is the total power factor where unity PF occurs when $PF_t = 1.0$

θ is the phase angle between current and voltage

P is the active power in kilowatts

P_s is the apparent power in kilovolt-amperes

4.5.3 Potential impacts of steady-state current distortions

4.5.3.1 Triplen harmonic-load-generated overcurrent in neutral path wiring

On a three-phase 4-wire system with perfectly balanced sinusoidal voltages and current (with no harmonics), the phase currents cancel such that there is no neutral current flowing back to the source. Due to load variation, distribution, and system unbalance, some neutral current is normally expected. These neutral currents are usually significantly less than the individual phase current.

Copyright © 2006 IEEE. All rights reserved.

Figure 4-23 shows a particular moment in which a "snapshot" was taken (the vertical line) and the magnitudes and polarities of the three currents at that moment for a balanced three-phase load with no harmonic distortion. Figure 4-24 shows how the three currents flow through the load, and since the load is balanced, no current flows on the neutral. If a single-phase load was added to one of the phases ("unbalancing" the load), the magnitude of current on the neutral would the same as the single-phase load.

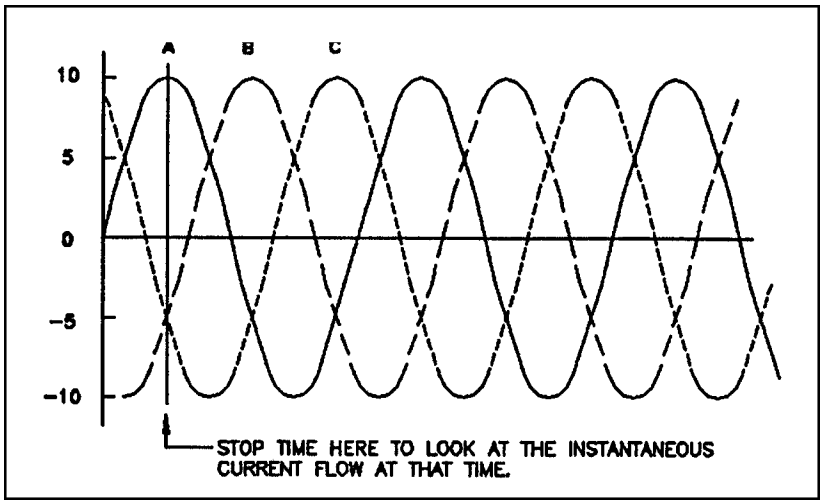

Figure 4-23—Balanced three-phase current wave shapes

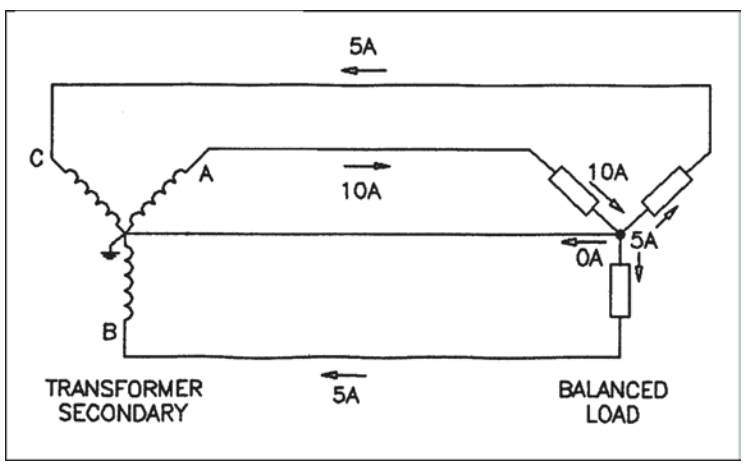

Figure 4-24—Instantaneous currents from Figure 4-23

With the addition of single-phase switch-mode (or rectifier/capacitor based) power supplies that are high in third (and multiples of the third) harmonics, the neutral could carry as much as, if not more than, the individual phase currents. In fact, if all three phases were balanced and all of the loads were switch-mode power supplies, the neutral could carry as much as 1.73 times the individual phase currents.

Figure 4-25 shows the phase relationship of the third harmonic in a balanced three-phase system. The third harmonic component of the A phase current is in phase with the third harmonic component of the B phase current, which is in phase with the third harmonic component of the C phase current. Only the third harmonic components of the three phase currents are shown, with a magnitude of 1A in Figure 4-26, to show how the third harmonic components add on the neutral. This is also true for the multiples of the third (6th, 9th, 12th, etc.), called *triplen harmonics;* the components are in phase with each other and add on the neutral.

 Copyright © 2006 IEEE. All rights reserved.

Figure 4-26 would imply that the neutral current could reach as high as three times the phase current. However, this is not correct, as Figure 4-26 is 100% third harmonic and does not show the fundamental current component, which would add to the third (and other) harmonic component(s), to make up the total rms current.

In an actual three-phase 4-wire circuit supplying single-phase switch-mode power supplies, the current is drawn by the power supply in peaked pulses as shown in Figure 4-21. Since the fundamental components are mostly balanced in magnitude, the current divides at the "star" point, and only the unbalanced portion flows on the neutral. This is also true for the harmonics that are not multiples of the third, such as the 5th, 7th, 11th, etc.; the portion of that harmonic component that is balanced divides at the "star" point, and only the unbalanced portion flows on the neutral. The triplen (third and multiples of the third) harmonic components, however, are in phase with each other, so they combine on the neutral. Therefore, the neutral current is the combination of the unbalanced portions of all of the fundamental and non-triplen harmonic components, plus all of the triplen harmonic components.

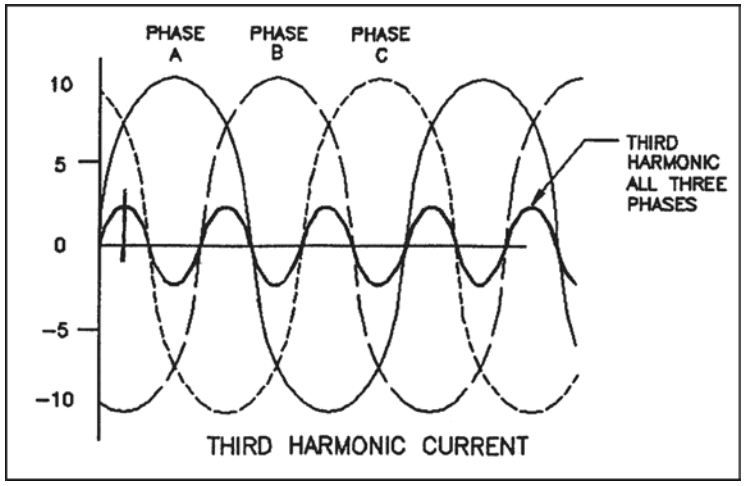

Figure 4-25—Phase relationship of the third harmonic

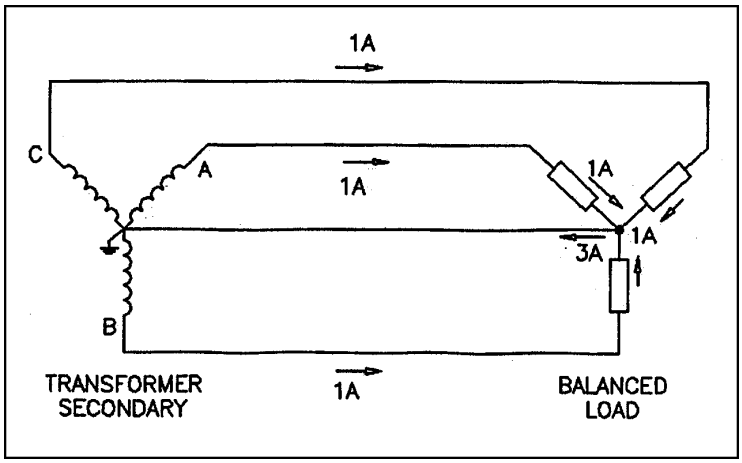

Figure 4-26—180 Hz currents combine on a common neutral conductor

Copyright © 2006 IEEE. All rights reserved.

The following example, for the purpose of analysis, shows that the practical worst-case neutral current is approximately 1.73 times the phase current. (See EPRI PQTN Brief No. 33 [B13].) Following is the formula for rms current, I_{rms} of the function $i(t)$. For a particular period of time T, the area of the function squared [$i^2(t)$] is divided by the time period T, and then the square root taken.

As shown in Figure 4-27, phase currents consisting of pulses of short duration could create a situation in which the frequency of the neutral current was three times the fundamental. Though this may not be the theoretical maximum of distortion, it certainly is very significantly distorted. The rms values of phase and neutral currents are shown below the pulses. Notice that the a^2t/T cancels out, and the ratio between the phase current and the neutral current is 1.73.

If the example is changed to be triangular shaped pulses, the area of each pulse is 1/2 of the previous example, but the ratio remains 1.73.

This true-rms current can dangerously overload the neutral conductor path itself, buses, or the end terminations/connections, unless they are suitably rated for the increased ampacity. Since the neutral conductor can be subject to approximately 1.73 times the rms current of the phase conductor, which can cause overheating of wiring systems and in equipment where this was not taken into consideration, a 200% rated neutral path, buses, and termination/connection system is the recommended practice for circuits where the load is primarily made up of switch-mode power supplies, such as those found in computer, office of information technology equipment (ITE). This subject is discussed in more detail in Chapter 8.

This is a particular problem in that neutral conductors are not subject to the normal overcurrent protection (provided for the phase conductors) in ac distribution systems (see NFPA 75 and IEEE Power Systems Harmonics Working Group Report [B28]).

The most common effect observed to date, however, appears to be the burning open of the neutral path at a point of connection or splice (e.g., at the transformer or panel board neutral bus-lug-wire point), with the result that the line-neutral connected nonlinear (and any other) loads are left connected to a floating neutral. This condition easily results in current unbalance conditions with the result that victim loads are forced to carry excess line current as dictated by the demands of the loads connected across the other two phases and neutral. They also experience excessive voltage being applied to their input power terminals during these kinds of events. Therefore, damage to the involved loads is almost certain and can be very costly if they are associated with electronic equipment and systems.

It should be noted from a practical standpoint, most wiring systems are not predominantly loaded to capacity with balanced single-phase nonlinear loads, so the likelihood of a serious problem is minimal. The consideration for neutral conductor component overheating is most applicable to those circuits in commercial buildings where the predominant loads are switch-mode power supplies.

 Copyright © 2006 IEEE. All rights reserved.

TUTORIAL, Continued

Applying the RMS formula to the worst-case scenario of shared-neutral loading (that is, all three phases fully loaded with single-phase nonlinear appliances) should yield the maximum possible neutral current. To simplify the math for this example, the areas of non-sinusoidal current in Figure A have been approximated with rectangles in Figure B. For the following calculations, assume that all current amplitudes (a_1 through a_6) are equal and that all pulse durations (t_1 through t_6) are equal. The phase current is:

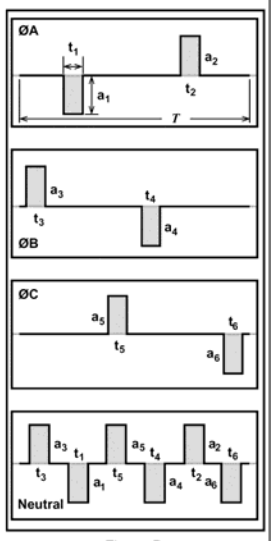

Figure B

$$I_{\text{Ørms}} = \sqrt{\frac{\text{area } [i^2 t]}{T}} = \sqrt{\frac{a_1^2 + a_2^2}{T}} = \sqrt{\frac{2a_1^2}{T}}$$

The neutral current is:

$$I_{\text{Nrms}} = \sqrt{\frac{\text{area } [i^2 t]}{T}} = \sqrt{\frac{a_1^2 t + a_2^2 t + \ldots a_n^2 t}{T}} = \sqrt{\frac{6a_1^2}{T}}$$

The relationship between the phase and neutral currents is:

$$\frac{I_{\text{Ørms}}}{I_{\text{Nrms}}} = \frac{\sqrt{\frac{2a_1^2}{T}}}{\sqrt{\frac{6a_1^2}{T}}} = \frac{\sqrt{1}}{\sqrt{3}} \approx \frac{1}{1.73}$$

The shared RMS neutral current for the worst-case scenario is:

$$I_{\text{Nrms}} = \sqrt{3} \times I_{\text{Ørms}} \approx 1.73 \times I_{\text{Ørms}}$$

Reprinted with permission from EPRI.

Figure 4-27—PQTN Brief No. 33 by EPRI [B13]

4.5.3.2 Transformer heating due to harmonic currents

Transformers serving linear loads have heat losses related to their operation at the fundamental frequency of the power system. There are the typically expected power losses due to I^2R in all of the current paths, and hysteresis plus eddy-current losses within the windings, the core, and any metallic items that stray flux can engage. However, the same linear-load-rated transformer serving nonlinear (typically electronic) loads will generally exhibit increased internal heating due to several factors. (See 4.7.2.2 for the equivalent circuit for a transformer; it may be helpful to review this subclause if not already familiar with the data.)

The first factor that can increase the internal heating of the transformer has to do with I^2R losses. The typical three-phase 480-120Y/208 V distribution transformer is connected delta-wye. As shown in 4.5.3.1, the triplen (third and multiples of the third) harmonic components of each phase are in phase with each other. In addition to the increased neutral current, this factor also affects the primary winding of the transformer.

In order to have a current flow in the secondary of a transformer, it must have a proportional current flow in the primary. This proportion is the transformer's turns ratio, shown in Equation (4.5):

Copyright © 2006 IEEE. All rights reserved.

$$\text{turns ratio} = \frac{\text{primary winding turns}}{\text{secondary winding turns}} = \frac{V_p}{V_s} = \alpha \tag{4.5}$$

If the other losses of the transformer are neglected, and only the load component of primary current (I primary) is used (see Equation 4.6):

$$\frac{I\ \text{secondary}}{I\ \text{primary}} = \alpha = \text{turns ratio} \tag{4.6}$$

In the case of a delta-wye transformer, as seen in Figure 4-28, the third harmonic current on the secondary of A phase, B phase, and C phase are all in phase with each other, so they add at the neutral and all three currents flow back on the neutral.

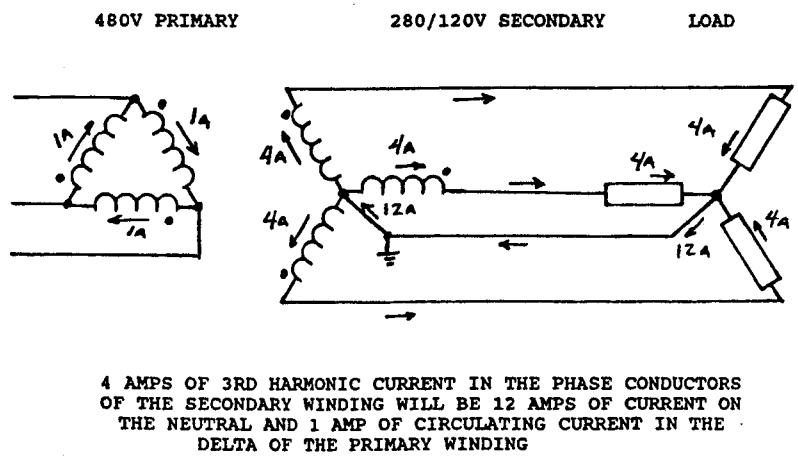

Figure 4-28—Circulating third harmonic current in the delta winding

In order for the third harmonic current (or any current for that matter) to flow in the secondary of the transformer, a current must flow in the primary of the transformer equal to the secondary current divided by the turns ratio. With a delta-wye transformer, this third harmonic current will circulate around the delta. This increases the heat loss (I^2R) of the primary.

Another and often more significant factor in which harmonically distorted currents increase the internal heating of a transformer is the generation of eddy currents (the stray currents that are induced in the windings and iron core due to imperfections of the magnetic circuit). Depending on the wave shape of the current, the increased heating due to eddy-current losses can be far greater than the I^2R losses of circulating currents.

When harmonic current flows through the transformer's windings it generates magnetic flux at each of the harmonic frequencies (h), with the flux's intensity being in proportion to the current at each frequency. Up to about the 15th harmonic, this flux produces exponential eddy-current heat losses per h^2 wherever it can engage a metallic item with significant cross-sectional area. At the highest harmonic frequencies, the relationship is no longer exponential, but is inverse, and defined by $1/h$. Between the two limits, it is fairly linear and about equal to h.

The foregoing heat losses in the transformer are in addition to those losses already expected from the action of the current flows at the fundamental frequency. IR_{ac} losses due to skin effect also play a role at higher frequencies and with large diameter conductors, but the losses associated with skin effects are generally not considered to be very significant in most power transformer applications and over the most common ranges of harmonics.

 Copyright © 2006 IEEE. All rights reserved.

An applied primary voltage containing harmonic distortion can also cause additional losses in the transformer, but in most practical cases the harmonic current-related winding losses related to the application of nonlinear loading are the major limiting factor for transformer capacity.

4.5.3.2.1 Derating conventional (no K-factor rating) transformers

At the present time, there are far more transformers in service that do not have assigned K-factor rating than transformers that do. Most of these transformers have been providing service quite adequately. This does not negate the fact that harmonic distortion causes increased heating in transformers. It brings two additional factors to the forefront; most of the transformers currently in service are operating significantly below their nameplate rating, and technology is changing, which many of the existing facilities have not been able to keep up with.

When the nature of the loads on an existing installation has significantly changed, a reevaluation of the installation is in order. A common example is when a transformer is supplying lighting loads comprised of florescent tube lights with magnetic ballasts, and the magnetic ballasts are removed and retrofitted with electronic ballasts. Depending on the design of the electronic ballast, it could significantly increase (or decrease, for the more advanced designs) the harmonic distortion of the current it draws. Another example is when a significant amount of electronic equipment has been added (i.e., in a hospital, office building, or testing laboratory). The transformer, though only partially loaded, may be subjected to significant additional heat. The performance of the existing transformer should be evaluated with the new loads.

Typical nationally recognized testing laboratory (NRTL) listed transformers that are not K-factor rated (by the NRTL) to be used with nonlinear loads are generally restricted to use on circuits with the following characteristics, which are specified by IEEE Std C57-12.00™ (for liquid-immersed) and IEEE Std C57.12.01™ (for dry-type) transformers:

a) Approximately sinusoidal, balanced input voltage, and

b) Full-load current that does not exceed 5.0% of total harmonic distortion

These limitations are primarily due to eddy currents induced in both the windings and structural components that increase losses and can cause overheating, as previously discussed.

If acceptable to the electrical safety inspection authority having jurisdiction at the location, a conventional NRTL-listed power transformer can be derated so that it may serve nonlinear loads. The clear need to obtain permission for the derating is necessary since typical power and general-purpose dry-type transformers listed under UL 1561-1999 [B63][5] are not evaluated by the NRTL conducting the tests per the following:

"Transformers covered under this category have only been evaluated for use on sinusoidal supply circuits. They have not been investigated for use where a significant nonsinusoidal content is present such as that which may occur with uninterruptible power supplies (sic), data processing equipment and solid state motor speed controllers." (See Underwriters Laboratories Inc. [B65]).

Subsequent to obtaining permission from the electrical safety inspection authority having jurisdiction at the location, the recommended practice for establishing the losses in conventional transformers in applications where nonsinusoidal load currents are present is provided in IEEE Std C57.110-1998 [B32]. The recommended practice applies the results of studies that found winding eddy-current loss, P_{ec}, to be approximately proportional to the square of the rms load current at that harmonic, I_h, and the square of the harmonic number, h (see Crepaz [B9]).

[5]Covers air-cooled, dry-type transformers of 600 V ac and 500 kVA for 1 ϕ and 1500 kVA for 3 ϕ units.

Copyright © 2006 IEEE. All rights reserved.

If the eddy-current loss under rated conditions for a transformer, ($P_{ec\text{-}r}$), is known, the eddy-current loss due to any defined nonsinusoidal load current (P_{ec}) and up to about the 15th harmonic can be expressed as shown in Equation (4.7) (see IEEE Std C57.110-1998 [B32]):

$$P_{ec} = P_{ec-r}\left(\sum_{h=1}^{h=h_{max}} I_h^2 \times h^2\right) \tag{4.7}$$

where

P_{ec} is the power loss due to winding eddy-current losses

$P_{ec\text{-}r}$ is the power loss due to winding eddy-current losses under rated conditions

I_h is the rms current at harmonic h

h is the harmonic order

This relationship has been found to be more accurate for lower harmonics (≤15th), and an increasing overestimation of losses for higher harmonics occurs thereafter. The overestimation factor is less on smaller transformers, but can be significant for large diameter windings and large transformers (see Emanuel and Wang [B12] and Hwang et al. [B23]).

4.5.3.2.2 K-factor rated transformers

The Underwriters Laboratories (UL) and transformer manufacturers have established a recognized rating method called K-factor, for dry-type power transformers, to indicate their suitability for nonsinusoidal load currents. This K-factor relates transformer capability to serve varying degrees of nonlinear load without exceeding the rated temperature rise limits.

The calculation of K-factor is based upon predicted losses as specified in the simplified method of IEEE Std C57.110-1998 [B32]. The limiting factor related to the overheating is again assumed to be eddy-current losses in the windings. So that K-factor may be universally applied to all sizes of transformers, the K-factor is defined on a per-unit basis in either of the two ways that follow (see UL 1561-1999 [B63] and UL 1562-1999 [B64]), although Equation (4.6) is more generally used than Equation (4.5).

$$K = \sum_{h=1}^{h_{max}} (I_{h(pu)}^2 \cdot h^2) \tag{4.8}$$

where

$I_{h(pu)}$ is the rms current at harmonic h, in per unit of rated load current of the transformer

h is the harmonic order

The K-factor used in Equation (4.8) is the same as the one seen in Equation (4.9). For rating purposes, UL has specified that the rms current of any single harmonic greater than the 10th harmonic be considered as no greater than $1/h$ of the fundamental rms current. This limitation is an attempt to compensate, in a practical manner, for otherwise overly conservative results at higher harmonic frequencies.

$$K = \frac{\sum_{h=1}^{h_{max}} (f_h^2 \cdot h^2)}{\sum_{h=1}^{h_{max}} (f_h^2)} \tag{4.9}$$

where f_h is the frequency, in hertz, of harmonic h.

 Copyright © 2006 IEEE. All rights reserved.

The current in Equation (4.9) is expressed on a per-unit basis such that the sum of the individual currents times the harmonic number squared is 1 (this is handy for checking the results of the calculation). Thus for a linear load current, the K-factor is always one (unity).

For any given nonlinear load, if the harmonic current components are known, the K-factor can be calculated (or better yet, measured) and compared to the transformer's nameplate K-factor. As long as the load K-factor does not exceed the transformer K-factor, the transformer is being operated in accordance with this part of its NRTL listing requirements and the related National Electrical Code® (NEC®) (NFPA 70, 2005 Edition) requirements.

An example of a nonlinear load's K-factor is shown in Table 4-5. UL lists the K-factor nameplate rating for dry-type transformers under UL 1561-1999 [B63] and UL 1562-1999 [B64]. Standard K-factor ratings are 4, 9, 13, and 20, with special ratings of 30, 40, and 50 that are available from some vendors. The K-9 rating is usually skipped over in favor of the K-13 rating since it is typically harder to find on the market.

Testing with a nonlinear load of appropriate K-factor is the preferred method for transformer K-factor rating testing. However, due to practical limitations, the most common method used by the NRTLs at present employs an overload of fundamental load current to simulate harmonic loading. This test method is described in UL 1561-1999 [B63] and UL 1562-1999 [B64] and requires an adjustment to compensate for harmonic losses. The test is based upon heat dissipation of the transformer without overheating any of its components or connections.

Table 4-5—Example calculation of a nonlinear load's K-factor

Harmonic number h	Nonlinear load current I_h (%)	I_h^2	$I_h = \sqrt{I_h^2/\Sigma I_h^2}$	I_h^2	$I_h^2 h^2$
1	100	1.000	0.909	0.827	0.827
3	33	0.109	0.300	0.090	0.811
5	20	0.040	0.182	0.033	0.827
7	14	0.020	0.127	0.016	0.794
9	11	0.012	0.100	0.010	0.811
11	9	0.008	0.082	0.007	0.811
13	8	0.006	0.073	0.005	0.895
15	7	0.005	0.064	0.004	0.912
Total		1.20		0.992	6.688
				K-factor = 6.688	

Transformers that are NRTL K-factor rated also possess certain mandated electromechanical construction characteristics not normally found in transformers without K-factor rating. These characteristics are an important part of the safety factor provided by the properly listed K-factor rated transformer. The most important of these requirements is that the neutral current path (buses, terminals, etc.) within the three-phase, wye-connected secondary transformer be designed to safely carry a continuous rms current of two times the maximum rated rms line current (e.g., this path is 200% rated for ampacity). This is done to ensure that a safe current-carrying capability exists in this path that is subject to excessively high rms currents

Copyright © 2006 IEEE. All rights reserved.

resulting from triplen harmonics associated with line-neutral connected nonlinear loads (see 4.5.3.2). This important safety feature is typically not found in standard transformers that are not K-factor rated and that may be operating with harmonic loads under a derating condition, as discussed previously.

4.5.3.2.3 Harmonic canceling transformers

The K-factor transformer has an advantage over a conventional transformer in that it has been designed and evaluated to be used with harmonic rich loads. However, it does not improve the distorted wave shapes, it just survives them.

The harmonic canceling transformer does improve the wave shape by canceling harmonic flux in the core of the transformer, and thus reducing the distortion of the voltage wave shape. It also improves the transformer's overall efficiency by reducing the heat losses due to harmonic loads.

A simple example of a "harmonic canceling" transformer is a zigzag transformer. As shown in Figure 4-29, a zigzag transformer has two coil windings for each phase. By reversing the direction that the second coil winds around the core, the direction of the flux created in the core by the second winding is the opposite from the first winding. For the fundamental (60 Hz) current, each phase current is shifted 120° from the other two phases, and the flux in each leg of the transformer's core is the sum of two phase currents through half of the total winding. The triplen harmonic currents, however, are all in phase with each other, and therefore cancel the triplen harmonic flux in the transformer core to the extent that they are balanced among the three phases.

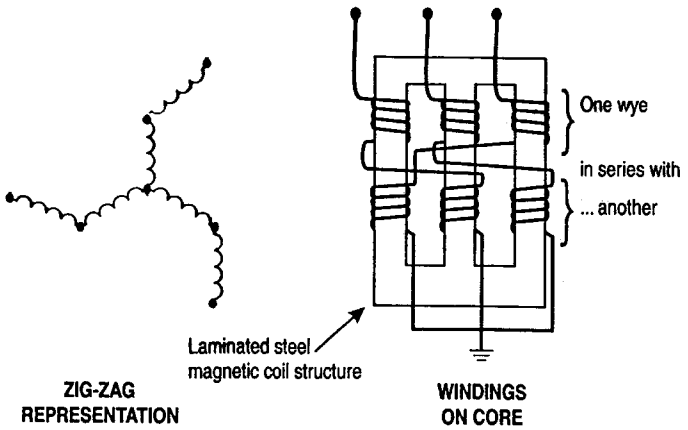

Figure 4-29—Winding configuration for a zigzag transformer

Adjustable-speed drives (ASDs) are another common source of harmonic current distortion. In this instance, the 5th and 7th harmonics are often a larger concern than the 3rd harmonic. Harmonic canceling transformers have also been designed for this application. As shown in Figure 4-30, each secondary winding has multiple sections that are wound around several different sections of the transformer's core. This creates a phase shift of 30° (each direction) from the main section of the secondary winding. The 30° phase shift in turn causes the 5th and 7th harmonics of one phase to cancel some of the harmonics from another phase.

4.5.3.3 Heat losses due to nonsinusoidal voltage source

Depending on the impedance of the power source, nonlinear loads will cause nonsinusoidal voltage waveforms. Voltage supplied to other equipment (e.g., ac motors and transformers) with these distorted waveforms can result in additional heat dissipation (see NFPA 75).

 Copyright © 2006 IEEE. All rights reserved.

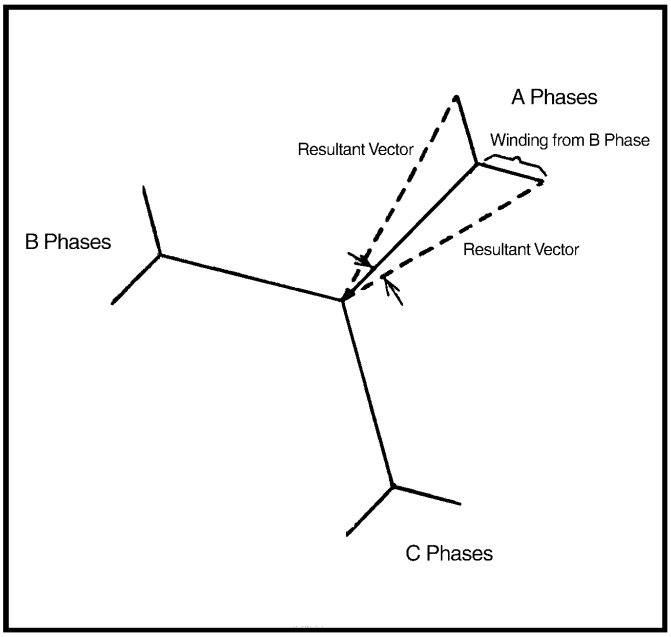

Figure 4-30—Phase shift of harmonic-canceling transformer

Harmonic currents flowing because of source voltage distortions typically cause significant heating in ac motors, transformers, and generally in any magnetically based electrical device employing ferrous metal in the flux path. With increasing current frequency, stator windings, rotor circuits, and stator and rotor laminations tend to dissipate additional heat due primarily to eddy currents (exponential loss), hysteresis (linear loss), and to a lesser degree, skin effect (linear loss). Leakage (e.g., stray) fields set up by harmonic currents in stator and rotor end windings also produce extra heat losses in any surrounding or nearby metal (see Arrillaga et al. [B3]).

4.5.3.4 Phase shift (power factor) effects

The total power factor is the combination of the displacement and distortion power factors. Unless special power factor corrected designs are used, the total power factors of electronic loads rarely approach unity (see NFPA 75 and Arrillaga et al. [B3]). Therefore, these loads should always engender concern for the effects that their harmonic currents will create on the involved ac power source and the intervening wiring system.

Distortion power factor is a method of addressing the phase shift created where the load current and ac line voltage are not sinusoidal. Nonlinear loads act as generators of harmonic currents, which are imposed on the power source and on the intervening wiring and other power transport components in the path, all acting as a load for them. The net result is the phase shift between the voltage and current is altered from what it would be for a purely sinusoidal load current.

4.5.3.5 Subcycle voltage waveform variances

Nonlinear loads exhibiting large crest factors due to high peak-current demands tend to cause voltage flat-topping of ac distribution voltage waveforms. This is typically due to the high voltage drop in the ac power source's internal impedance that these peak currents create at, or near, the 90° and 270° points on the voltage waveform. These large crest factors can preclude certain types of load ac-dc power supplies from obtaining needed output filter capacitor recharging current on successive half-cycles from the building ac power distribution system.

Copyright © 2006 IEEE. All rights reserved.

While some voltage waveform flat-topping can be tolerated by well-designed (e.g., equipped with a large bulk energy-storage filter capacitance) and properly loaded ac-dc power supplies, excessive flat-topping can cause the equivalent of an ac power sag (see FIPS Pub 94). Depending upon the design and loading of the ac-dc power supply and the degree of flat-topping being experienced, the equivalent sag condition may be of short or of a long duration lasting many cycles.

SCR-controlled equipment (e.g., rectifier power supplies, motor controls, and inverters) can cause repetitive ac distribution voltage disturbances called *notching* and multiple zero crossings of the voltage waveform that are generally related to momentarily high commutation currents (Figure 4-31). These disturbances in turn can upset electronic loads that are connected into these circuits for their input power and timing activities. They also can create near-field coupled interference into nearby susceptible cables and connected circuits, and can increase the noise in the grounding system.

4.6 High- and low-frequency regimes defined

The preceding subclauses presented the major issues of power quality. At this point it is important to address which analysis technique, low-frequency lumped parameters, or high-frequency wave and transmission line (or a little bit of each) applies to each issue. Once the issues are divided between these two categories, an explanation and useful definition of each category will be provided.

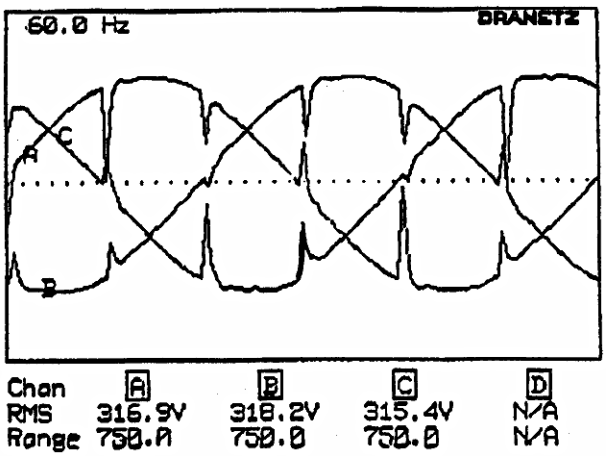

Figure 4-31—Notching

4.6.1 Deciding on the appropriate analysis technique

In spite of the "transmission line" in high-frequency wave and transmission line analysis, many of the power transmission and distribution problems can be adequately addressed with low-frequency lumped parameter analysis. Practically all of the steady-state operating conditions, such as harmonic distortion are adequately addressed with low-frequency analysis. High-frequency effects begin to creep in with transients, such as those that occur during the switching of loads. But as 4.4.1.1 covers, a low-frequency lumped parameter circuit can often be used to model this also.

Lightning with its very fast rise times can require both low- and high-frequency analysis techniques. High-frequency techniques are used to deal with the leading edge of the wave, and low-frequency techniques to deal with all the energy discharged.

High-frequency wave and transmission analysis becomes essential in dealing with the issue of interference, particularly when computer/telecommunication equipment is involved. High-frequency wave and

 Copyright © 2006 IEEE. All rights reserved.

transmission line effects could be ignored in most other power quality issues except interference (and lightning protection), to come up with a workable solution. This is so much the case that when high-frequency analysis is necessary to deal with switching surges, it is usually because of an interference problem.

At this point it should be noted that high-frequency grounding techniques are necessary in lightning and surge protection, and also in dealing with interference problems. Subclause 4.8 will also address performance issues with computer/telecommunication equipment requiring high-frequency grounding. Low-frequency grounding techniques are required for the safe operation of power transmission and distribution systems.

One new area in which high-frequency wave and transmission line analysis is starting to be used is with pulse-width modulated (PWM) ASD. There are issues dealing with the length of the cables between the drive and the motor and continuously subjecting the motor to impulses that have high frequency concerns.

4.6.2 Definition of the basic current loop

A typical basic current loop is shown in Figure 4-32. Using circuit theory, it can be seen that if a sinusoidal voltage E_S is used to drive a current I_a in the closed loop to the load Z_L, along path length L_m, all current and voltage events around the loop will be considered as occurring instantaneously and in continuous fashion for the duration for which E_S is applied. This is a low-frequency view of this circuit appropriate for dc and steady-state conditions, but does not explain what happens at the moment of power application or removal, or generally higher frequencies.

It is the electrical length of the current loop, defined by L_m as the distance between points I_a and I_b, that determines the point at which circuit theory, as previously discussed, or transmission line (wave) theory, as discussed in 4.6.3, is applied. This demarcation point between the two regimes is called the *boundary point*.

Above the boundary point, it is seen that not all things happen simultaneously in the current loop—it takes time for things to occur, and when they do, they occur sequentially with a true time lag for currents and voltages to travel around in the current loop. Here is where transmission line or wave theory must be used in order to explain what happens in the circuit, since circuit theory does not allow for things that do not occur simultaneously. Note that the time it takes a wave to move from point *a* to point *b* in a physical medium (e.g., a wire) as opposed to a vacuum is significantly longer than the speed of light.

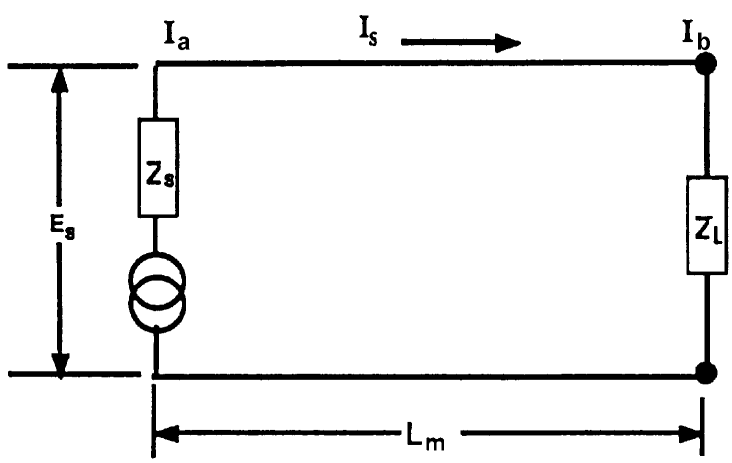

Figure 4-32—Typical basic current loop in low-frequency regime suitable for circuit analysis

NOTE—This is a *small circuit* in relation to the involved current's highest frequency wavelength if the electrical distance between *a* and *b* is ≤(1/20)λ.

Copyright © 2006 IEEE. All rights reserved.

4.6.3 Velocity of propagation

The time lag for currents and voltages to travel around in the current loop, as discussed in 4.6.2, is properly defined as the *velocity of propagation*. This time lag is determined from the time it takes the first transition point (e.g., the leading edge) on the current waveform to make the trip from point I_a to point I_b in the basic current loop (see Figure 4-32). This time is strongly influenced by the relative permittivity, ε_r, and relative permeability, μ_r, of the path, so that the velocity, V, of the current's propagation through the conductive medium is then found using Equation (4.10).

$$v = \frac{c}{\sqrt{\varepsilon_r \mu_r}} \tag{4.10}$$

where

v is the propagation velocity in m/s

c is the propagation velocity of an electromagnetic wave in a vacuum ($3 \cdot 10^8$ m/s)

NOTE—Units of ε and μ must be the same and cancel.

With the velocity of propagation known, the classification of the subject circuit into the large or small category may proceed, with circuit theory typically applying to small circuits and wave or transmission line theory to large circuits.

4.6.4 Small and large circuits defined

For the most part, a small circuit, where circuit theory may be used with some confidence, occurs when the amount of current change between I_a and I_b is small and the change occurs in the time determined using Equation (4.11):

$$t = \frac{l}{v} \tag{4.11}$$

where

t is time

l is the length of the path

v is the propagation velocity

Further illustration of the foregoing occurs when the period of a given sinusoidal current is compared to the propagation time in the current loop as determined using Equation (4.11). Therefore, using Equation (4.12):

$$t \ll T \tag{4.12}$$

where

t is the time in seconds from Equation (4.11)

T is equal to $1/f_{Hz}$ (the period of the waveform)

If for some reason, it is not desired that the propagation time t be measured in order to determine if a large or small current loop is under consideration, the longest (e.g., worst case) propagation path length (l) can be compared to the wavelength (λ) of the sinusoidal current being considered. This is done per Equation (4.13).

 Copyright © 2006 IEEE. All rights reserved.

$$v = \lambda f \tag{4.13}$$

where

v is the propagation velocity from Equation (4.10)

λ is the wavelength of the sinusoidal wave

f is the frequency in hertz

From an overall standpoint, the foregoing represents the view that the current loop under consideration is considered to be a small circuit suitable for analysis using circuit theory only when the length of the current loop is much less than the wavelength of the highest frequency sinusoidal wave comprising the waveform on the path. This is represented in Equation (4.14).

$$l \ll \lambda \tag{4.14}$$

where

l is the length of the current loop's path

λ is the wavelength of the highest frequency sinusoid in the given waveform

The approximate ratio of the current in the loop between point I_a and I_b may be determined via Equation (4.15), as follows:

$$\left|\frac{I_a}{I_b}\right| = \sqrt{\cos^2 kl + \left[\frac{Z_L}{Z_0}\sin kl\right]} \tag{4.15}$$

where

I_a is the current at input of the loop

I_b is the current at the end of the loop

k is equal to $2\pi/\lambda$, i.e., the wavelength number

l is the length of the loop in meters

Z_L is the loop's output-load impedance

Z_0 is the loop's input-source impedance

Equation (4.15) may be presented in graphical form as shown in Figure 4-33. From this graph it can be seen that up to approximately 0.1 λ, the ratio of current for I_a and I_b is not great, and so circuit theory can be used on the assumption that the current is flowing at all points in the current loop at the same time. In general, a 0.05 λ value is recommended to be used as a limit in this area, and this coincides with the recommendations in this chapter and in Chapter 8 on limiting the electrical length of a grounding/bonding conductor to no more than (1/20)λ (i.e., 0.05 λ), if it is to be effective as a means of equalizing potential across its length. Note that at 0.1 λ the ratio of 1.4:1 for I_a and I_b exists, and that this is a point of –3 dB. Such a point is usually suitable for estimation purposes and relatively noncritical or low-susceptibility equipment, but for most reliable operation of typical digital logic-based equipment, the current ratio established at the (1/20)λ point, as recommended herein by EPRI TR-102400-V2 [B14], and by Ott [B49], is viewed as a limit.

Copyright © 2006 IEEE. All rights reserved.

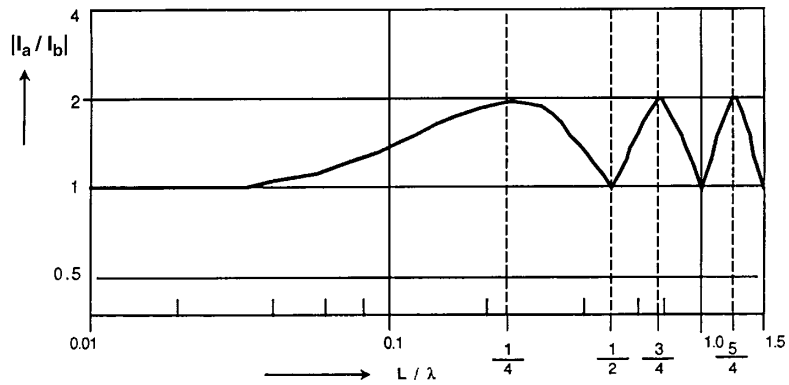

Figure 4-33—Ratio of current between I_a and I_b per Equation (4.12) as a function of the current loop's length

NOTE—Normalized to the wavelength λ of the applied signal, for $Z_L = 2Z_o$ for a 2:1 mismatch.

4.6.5 Selecting circuit analysis or wave-transmission line theory

As explained previously in 4.6.4, in order to successfully apply circuit theory to the current loop under consideration, the closed loop path, as measured in meters, must be much smaller than the wavelength in meters of the highest frequency sinusoid comprising the waveform under consideration. Thus, it can be assumed that after the leading edge of the impinging waveform has arrived at the end of the current loop, its main body and trailing edge have not yet cleared the input point of the loop—current is flowing simultaneously in all parts of the circuit from the same waveform event, and the use of circuit analysis is valid.

In the case where the leading edge of the impinging waveform under consideration has not yet arrived at the end of the current loop, wave or transmission line theory must be used to determine the response of the circuit during the time period it takes for the leading edge to arrive. The reverse is also true when the trailing edge of the waveform departs the input end of the current loop and when there is still current flowing in the remainder of the loop. In the former case, we deal with a strictly limited period of time for a turn-on event, and in the latter case, a turn-off event.

Hence, even with a small circuit, both circuit analysis and wave-transmission line theory must be used to predict the performance of the circuit if a full explanation of its performance is desired. Sometimes however, the concern can be limited to only the effects of the leading edge or the period of time where current is simultaneously flowing in all parts of the circuit. In this case, one analysis method or the other is applied depending upon what information is needed, and the other is discarded.

In the typical event where an impulse is being considered and where it is fully contained on the current loop (e.g., it is traveling down the current loop and its trailing edge has departed, but its leading edge has not yet arrived), only wave-transmission line theory can be used to explain the action and to predict performance.

The foregoing is best appreciated when it is noted that the typical noise impulse that undesirably affects digital logic-based equipment is of relatively short duration and contains rapid transitions. Thus, it is almost always necessary to use wave-transmission line theory to explain and predict events on typical wiring paths, such as grounding and bonding conductors in buildings that are used to interconnect items of electrical or electronic equipment. Since these conductors are lengthy in respect to the impulse's duration, there is no hope that circuit theory can be used to explain what is happening or is going to happen—so it must not be used.

 Copyright © 2006 IEEE. All rights reserved.

Nowhere is this more important to understand than when the connection leads for typical LC filters or SPD networks are being considered and where grounding/bonding conductors are used in conjunction with ac-dc power, signal level (all types), and telecommunications circuits that are associated with digital logic-based equipment; or when specialized building grounding conductor systems that are many tens of feet in length are being considered, such as typical SPG and related TREE designs (see 4.8.5.2), or "daisy-chain" connections.

The foregoing grounding system philosophies are typically, but undesirably, associated with some forms of process-control equipment, computer systems, and especially dedicated telecommunications grounding conductor systems such as are installed in relation to the dc power plant, but in almost all such cases are being misused for high-frequency and surge-current control grounding purposes. These are classic examples of large circuits that require high-frequency wave-transmission line theory approaches, but which are typically mistreated as if they are small circuits that can be analyzed via circuit theory, or as if they only operate at low frequency.

In summary, if best performance is required, the current loop is kept within the recommended limit of less than (1/20)λ—especially where grounding/bonding conductors are concerned. Then it may be assumed that the circuit has simultaneous current flow to all of its parts and it may then be treated with circuit analysis, which is much simpler to work with than wave-transmission line theory.

4.7 Impedance considerations

Subclauses 4.3, 4.4, and 4.5 presented the major issues of power quality. Each issue presents another factor that must be addressed to achieve dependable operation of electronic equipment. However, not all factors are of equal importance in any given situation. It is often necessary to sacrifice performance in one area to gain in another. An understanding of electrical impedance is fundamental to the design of power systems for electronics. Equally important is an understanding of how different aspects of impedance apply in different circumstances. For example, when dealing with system impedance for load studies and fault calculations, a transformer is considered a lumped inductance, and the interwinding capacitance is ignored as insignificant. However, when addressing the propagation of high-frequency interference, the interwinding capacitance is very significant. So significant in fact that specially designed shielded transformers are commercially available to deal with this issue.

The total system impedance can be grouped into four fundamental parts: the power source; the distribution; the load impedances; and very importantly, the grounding/bonding system's impedances (e.g., power/safety and performance parts). It is important to note that the nature and magnitude of these impedances vary with frequency. These impedances and their frequency-related considerations are discussed next.

4.7.1 Frequencies of interest

One of the more challenging aspects of designing power systems and the associated grounding/bonding systems for electronic equipment is that they often must behave in an orderly fashion from dc to hundreds of megahertz. This is particularly true of computer/telecommunication equipment that communicates over long distances. This total frequency range can be conceptualized as two distinct frequency ranges: a power/safety range and a performance range.

4.7.1.1 Power/safety range

The power/safety range typically encompasses a frequency range from dc to several tens of harmonics above the power source's nominal frequency (e.g., 60 Hz). In most cases, the amplitude of each harmonic drops off rapidly with increasing frequency above the thirteenth, so that about 1 kHz would be the normal upper frequency limit. Harmonics as high as the 50th may be of interest, placing the maximum frequency limit to about 3 kHz for the power/safety range. Note that this is all well within the audio frequency range.

Copyright © 2006 IEEE. All rights reserved.

Impedances in this range tend to be modeled by lumped resistance, inductance, and capacitance. Designers of typical industrial and commercial power systems are generally familiar with the needs and design standards of this frequency range, especially in relation to safety issues (see the NEC and IEEE Std 446).

4.7.1.2 Performance range

The term *performance range* is defined here to be in the frequency range between tens of kilohertz and hundreds of megahertz. It is within this range that conducted, coupled, and radiated electromagnetic energy can significantly impact the operational performance of most forms of electronic equipment.

The upper portion of this range has historically been the domain of radio-frequency engineers, and in general, is identified as a specialty area, distinctly different from power engineering. Accordingly, there is often a need to apply wave and transmission line theory to the conductors and circuits operating in the performance range as the use of circuit theory (which uses lumped resistance, inductance, and capacitance) is not adequate once conductors achieve significant portions of a wavelength at a given frequency, and this occurs with regularity over the performance range.

In general, once a conductor becomes approximately $\geq 1/20\ \lambda$ at some given frequency, circuit theory no longer applies, so wave and transmission line theory must be used to explain the path's conditions of impedance, how the current and voltage distribution occurs on it, and how signals are reflected and propagated across it as functions of time and velocity factor in the transporting medium. This is often a very significant factor for the grounding and bonding conductor systems. Impedances in this range tend to be characterized by distributed resistive, inductive, and capacitive elements, particularly at the higher frequencies (see NFPA 75).

Wiring techniques that are adequate in the power/safety frequency range are typically unsuitable for use over most of the performance frequency range, unless augmented by special design techniques. These are discussed later in this chapter and are presented in recommended practice form in Chapter 8.

4.7.2 Power system impedances

In its basic form, a power distribution system would have three major components that determine the system's impedance: generators, transformers, and conductors. In a slightly more complex form, power factor correction capacitors are added as significant impedances to the first three types. Power distribution systems inside of facilities with critical loads add another significant component: a UPS system. The power distribution system for most facilities has a combination of these five types of components, and the normal "power source" for most facilities is a utility transformer.

Equivalent circuits are often used to analyze specific issues of the power distribution system. It is essential that the equivalent circuit be appropriate for the specific issue and frequency of interest. The analysis technique will also vary depending on frequency of interest, and/or whether the issue is "static," such as load calculations and voltage drops, or "dynamic," such as load switching and fault clearing.

The equivalent circuit will have impedances that can be further delineated as being a static or dynamic power source impedance, internal impedance, forward transfer impedance, and output impedance. These basic concepts of power system impedance can be illustrated by simplified equivalent diagrams with a generator and transformer and will be discussed in the following subclauses.

4.7.2.1 Power source dynamic impedance

Knowledge of the power source's dynamic impedance is key to the understanding of critical load-source interactions. Power source dynamic impedance, Z, is the ratio of incremental internal voltage drop within the same source, dE, to the incremental load current supplied by that source, dI. As shown in the circuit representation of Figure 4-34, source impedance is usually resistive and inductive.

 Copyright © 2006 IEEE. All rights reserved.

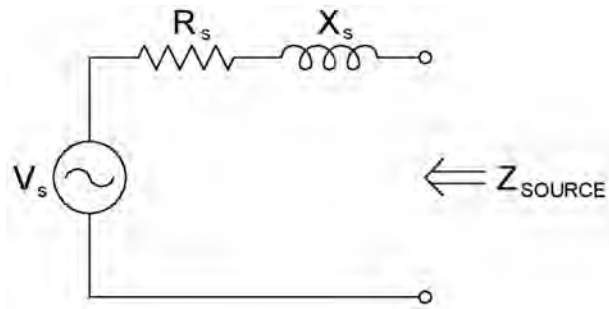

Figure 4-34—Power source impedance

Power source dynamic impedance, *Z*, for a UPS system is very different than that of an emergency generator or the utility transformer. This is most notable as voltage sag during block loading. Most UPS systems have very limited capability in accepting block loads that have high inrush currents and will use their static bypass switch to supply the inrush current from the utility (or emergency generator) providing their input power. This points out a significant design requirement, that the emergency generator be sized properly to accept expected block loads; and a significant operational procedure, do not switch major loads onto the UPS while it is on batteries. [Large motors are seldom supplied by UPS power, but downstream transformers are very common in power distribution units (PDUs), etc. The transformer's inrush may be more than the UPS systems can handle while it is on batteries. This would only occur during an abnormal condition, since a PDU transformer that was already energized would not loose power when the UPS system went to batteries.]

Power source impedance is also a significant factor when addressing current harmonics. This is true even when the power source is the utility. In Figure 4-34, the voltage at the terminals will be the vector sum of V_s and the voltage across R_s and X_s. If a load connected at the open terminals draws a significantly distorted current, the voltage distortion at the open terminals will be directly affected by magnitude of R_s and X_s. A "weak" utility system, at the end of a long power line and/or with a small transformer, will have relatively high source impedance. Current harmonics will cause greater voltage distortion in the weak system than the same amount of distortion would cause to a "stiff" utility, with low source impedance. The fault current available at the utility is a measure of how weak or stiff the system is, and is used to establish harmonic current distortion limits in IEEE Std 519.

4.7.2.2 Internal impedance

Internal impedance is the impedance of the power source or distribution system at its design frequency. However, the internal impedance of active devices such as generators and UPS systems are far more complex than for a passive device such as a transformer. Therefore, a transformer will be used in the following subclauses to present the impedance concepts, with a review of its equivalent circuit to start.

An important factor in a transformer's impedance is the turns ratio between the primary and secondary windings, represented as "α." Figure 4-35 shows an "ideal transformer" in a dashed box and the primary and secondary resistances and reactances of a practical transformer. The secondary winding has N_2 turns of wire wound around an iron core, and the primary winding has N_1 wound over it. The turns ratio α, equals N_1 divided by N_2, and the ratio of E_1 to E_2 is also equal to α. For an "ideal transformer," there are no losses, and the primary voltage multiplied by the primary current is equal to secondary voltage multiplied by the secondary current ($E_1I_1 = E_2I_2$ and $I_2 = \alpha\ I_1$).

Copyright © 2006 IEEE. All rights reserved.

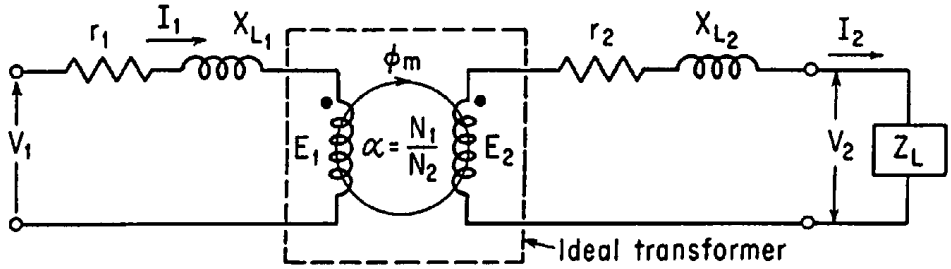

Figure 4-35—Transformer impedances and turns ratio α

Figure 4-36 is the equivalent circuit of a practical transformer as seen from the primary. R_1 and X_{L1} are the resistance and reactance of the primary winding. R_m and X_{Lm} are the effect of "magnetizing current," the energy required to magnetize the iron core and create open-circuit voltage at the secondary terminals. R_2 and X_{L2} are the resistance and reactance of the secondary winding, and Z_L is the impedance of the load. Notice that R_2 X_{L2} and Z_L are each multiplied by the turns ratio squared (α^2).

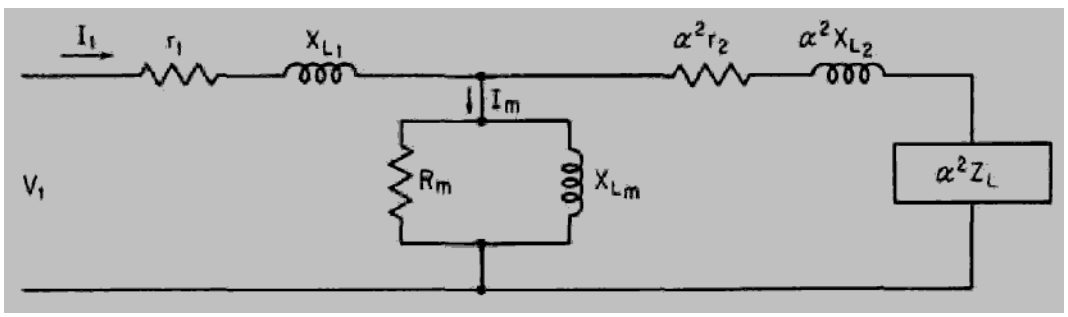

Figure 4-36—Transformer equivalent circuit

As an example, "α" for a single-phase 480 V to 120 V transformer is 4. If Z_L is a 10 Ω resistor, 12 amps will flow through the resistor and the secondary winding of the transformer. To "push" a current of 12 amps through the secondary, the primary current would have to be 12/α, which in this case is 3 A, plus the magnetizing current (through R_m and X_{Lm}). Looking at just the load component of current, the 3 A, and dividing it into the primary voltage of 480, shows what the 10 Ω resistor is equivalent to, at the primary side, 480/3 = 160, which is $10 \times \alpha^2$.

In practice it is often more convenient to express internal impedance of a transformer as a percentage that can be applied for whatever range of kVA that the subject transformer is available in. This eliminates the need to factor in the turns ratio, which would be required if the impedance was expressed in ohms. For example, the determination of a transformer internal impedance (%*Z*) is typically done at field level per Equation (4.16).

$$\%Z = 100\left(\frac{I_{full-load}}{I_{short-circuit\ maximum}}\right) \tag{4.16}$$

The internal impedance and %*Z* is often provided on transformer nameplates.

Due to the method of testing in a transformer factory or test-stand setting, the calculation of %*Z* requires knowledge of the following:

 Copyright © 2006 IEEE. All rights reserved.

a) The input voltage necessary to make the current in a short-circuited secondary equal to the rated current

b) The rated input voltage

Then, the transformer internal impedance, again expressed as a percent (%*Z*), is the ratio of item a) to item b), multiplied by 100.

Typical dry-type power transformers suitable for most types of electronic equipment are identified in IEEE Std C57.110-1998 [B32]. These transformers tend to have impedances in the range of 3% to 6% at their nominal design frequency (e.g., 60 Hz).

Two examples of %*Z* and its use follow:

1) A transformer with a 5% internal impedance allows 20 times its rated current to flow during short-circuit conditions [(100/5) = 20], assuming sufficient fault current is available on its primary. This is more than sufficient to ensure swift operating times for overcurrent protective devices clearing faults. Conversely, a 20%*Z* would limit available fault current to no more than 5 times full-load current, and this would not be sufficient to ensure a prompt operation of a main overcurrent protective device (at least 10 times current is often recommended).

2) Although not to be confused with the subject of voltage regulation, the %*Z* of a transformer does have a relationship to load changes and output voltage stability as follows: A transformer with a 5% internal impedance also allows a 5% voltage variation to occur on its output from no-load (where the voltage is equal to the primary voltage times the turns ratio) to full-load (where the voltage is 5% lower than at no-load). With a transformer of 2.5%*Z*, this would be reduced to a 2.5% variation. Conversely, a 20%*Z* rating would allow a 20% voltage variation, which is too great for most electronic loads to tolerate without malfunction (see FIPS Pub 94).

It is desirable to have low internal impedance, such that supply voltage variances are small for normal swings in load currents. However, if the source impedance is too low, possible short-circuit current can be excessive to the point that special circuit breakers or supplementary current-limiting fuses are required to interrupt fault current.

Note that to determine the full range of voltage variation from a transformer's output under varying load conditions, the impedance characteristics of the primary circuit supplying it must also be considered. Such series impedance will act in concert with the transformer's %*Z* and will in almost all cases produce larger voltage variations than indicated above for %*Z* alone.

4.7.2.3 Forward transfer impedance (transformers)

Forward transfer impedance (see Figure 4-37) is an attribute similar to internal impedance, but at frequencies other than the nominal power system's fundamental frequency (e.g., 60 Hz). Forward transfer impedance is often an important part of a transformer-based power conditioning device's specification and the related performance claims made by its OEM. Forward transfer impedance assumes that an interference source exists on the input side of the transformer and the secondary-connected load is the target. Knowledge of the forward transfer impedance allows the designer to assess the capability of the power source to

a) Provide load current at the harmonic frequencies needed to preserve a suitable output voltage waveform. Generally, the highest frequency of interest is 3 kHz for 50 Hz to 60 Hz power systems ($h = 50$), and 20 kHz to 25 kHz for nominal 400 Hz power systems (which is also about 50 times the supply frequency).

b) Pass unwanted frequencies, such as transverse-mode noise, between the input and output terminals.

Of the preceding two parameters, the second is more important in typical cases, such as where transformer-based power conditioning equipment is being considered for an application.

Copyright © 2006 IEEE. All rights reserved.

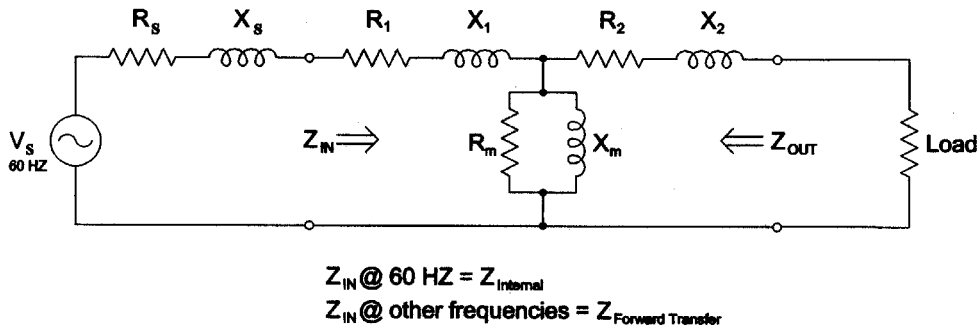

Figure 4-37—Internal and forward transfer impedances of transformer

As previously mentioned, the primary winding of a practical transformer is usually wound on top of the secondary winding, which is wound around an iron core. Whenever two conductors are separated by an insulator, capacitance exists where the two surfaces are in proximity to each other. Since the primary windings and secondary windings are in proximity to each other and the iron core, there is winding-to-winding capacitance, and also between each winding and the iron core. At the power frequency, these capacitances are usually insignificant and therefore ignored, but as the frequency of interest goes up, these capacitances becomes significant.

A common method for determining forward transfer impedance of transformers (and filters) is to measure simultaneously an input test signal voltage and short-circuited output current. The ratio is the forward transfer impedance. Testing may be done at a single frequency of interest, or more often it is undertaken over a wide range of frequency to determine the overall band-pass characteristic for forward transfer impedance. This may be done by using a suitably amplified output from a signal generator and plotting the results of several spot-frequency measurements. Alternately, a sweep signal generator with slow sweep-rate and slaved $x - y$ recording indicator may be employed for the dynamic development of band-pass curves.

Generally, the forward transfer impedance will increase with increasing frequency. During testing, points of resonance may be encountered within the test frequency range and very high or low impedances may be noted to occur at these points, depending upon whether the resonance is from series or parallel parasitic elements. These resonances may act to further beneficially attenuate, or to unwantedly accentuate, the transfer of signal across the transformer, again depending upon the type of resonance.

It is desirable to have a minimum forward transfer impedance at the nominal power frequency (internal impedance, discussed in the preceding subclause) and impedance as low as possible for its low-order harmonics (e.g., up to 50th harmonic). This is necessary to keep efficiency high, minimize voltage drop across the transformer as the load increases, and minimize voltage distortion caused by the current harmonics of the connected load.

At frequencies above the 50th harmonic, a high value of forward transfer impedance is highly desirable to attenuate transient voltages conducted by the power system toward the load. In most cases testing should be undertaken to at least several hundreds of kilohertz and should not be stopped when the first or subsequent resonant points are reached. Testing to at least 1 MHz is recommended.

A common method of achieving a high forward transfer impedance is to install a shield between the primary and secondary windings, which is then grounded. High-frequency noise on the primary winding would therefore couple to the shield, instead of the secondary winding. Care must be taken in how the shield is grounded to ensure that it couples the noise *away* from the circuit to be protected, not *into* it. Interwinding shielding is discussed in more detail in 4.7.2.5.

 Copyright © 2006 IEEE. All rights reserved.

4.7.2.4 Output impedance (transformers)

Output (reverse transfer) impedance of a transformer is an attribute similar to forward transfer impedance, but it describes the impedance of the power system as seen from the load looking into the transformer from the secondary side.

If the load generates harmonic currents (e.g., it is a harmonic current source), then these currents circulate on the wiring system between the load and the power source in much the same manner as fundamental currents do. Similar to fundamental currents, these higher frequency currents produce voltage drops across the distribution wiring system's impedance and the source's internal impedance—all of which algebraically add to (or subtract from) the power system voltage. Therefore, the amplitude and wave shape of the line voltage can change significantly, and harmonic voltage waveform distortion results. Accordingly, it is very important that the power source path (and particularly the supply transformer) have low-output impedance to present to both the fundamental and to these harmonic currents.

A common example of low-output impedance to the fundamental and triplen (third and multiples of the third) harmonic currents is a three-phase delta-wye transformer. As covered in 4.5.3.2, the triplen harmonics flowing on the secondary wye winding require a circulating current in the primary delta. The circulating current provides the necessary magnetic flux required to create the triplen harmonic current the load demands. Therefore the output impedance is low to triplen harmonics, and very little voltage distortion is created. If, however, the primary winding was an ungrounded wye instead of a delta, there would be no circulating current possible, and the output impedance to the triplen harmonics would be high. The voltage distortion caused by the loads' demand for triplen harmonic currents (that the secondary winding could not easily provide) would be much greater.

At higher frequencies than those produced by the harmonics, a high-output impedance provides some beneficial filtering of high-frequency transients as generated from the load(s) (e.g., due to $-e = L\ di/dt$ switching) and which can attenuate them before they can be unwantedly impressed onto the transformer's input supply circuit. Once this occurs, they are unwantedly propagated upstream to other parts of the distribution system. Transformer output impedances generally rise with frequency, but parasitic reactances within the transformer can allow series resonances that may lower output impedance at specific frequencies and unwantedly allow these frequencies to easily pass across the transformer from the output to the input.

4.7.2.5 Interwinding electrostatic shielding (transformers)

A solidly grounded bypass capacitor that creates a capacitive voltage divider and current shunt can be introduced into the interwinding capacitance between the primary and secondary in a transformer by adding a metal foil between the windings, and then by suitably bonding it in low-inductance fashion to equipment ground within the transformer (see Figure 4-38 and Lewis [B38]). This has three major effects, as follows:

a) Interwinding short circuits are largely prevented due to the introduction of a solidly grounded fault-current path as provided by the electrostatic shield (see Figure 4-40).

b) High-frequency currents in the common mode are capacitively shunted into the grounding system in bidirectional fashion from either the primary or the secondary circuits (see Figure 4-39).

c) The capacitive voltage divider action reduces the available noise voltage to be coupled capacitively between the two windings (see Figure 4-39).

Copyright © 2006 IEEE. All rights reserved.

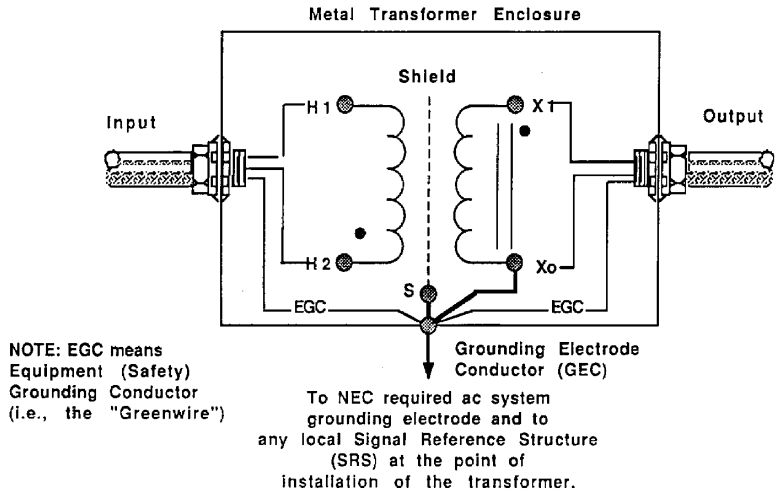

Figure 4-38—Typical electrostatically shielded isolation transformer (single-layer shield shown)

The benefits from effect a) are obvious, but the conditions in effects b) and c) produce mixed results. For example, the capacitive shunting action beneficially reduces the amount of common-mode current coupled across the transformer from either direction, but also increases the common-mode current flow in the grounding system the transformer and its shield are referenced to. With a suitably designed signal reference structure (SRS) grounding system, per Chapter 8, this is not normally a problem. However, if non-recommended grounding system designs are employed, this can be a significant problem—especially SPG designs and most variations of them (see Chapter 8).

Also, if the shield's grounding/bonding conductor is not installed as a low-inductance pathway, then per Figure 4-39 it can be seen that it will act to defeat the shunt and voltage divider action provided by the electrostatic shield, since it is an inductance added in conjugate (vectorially, with X_L 180° from X_C) with the capacitance provided between the electrostatic shield and the associated faces of the windings. Bypass capacitors must be grounded via low-inductance means if they are to be fully effective and if the exhibition of unwanted resonances is to be avoided.

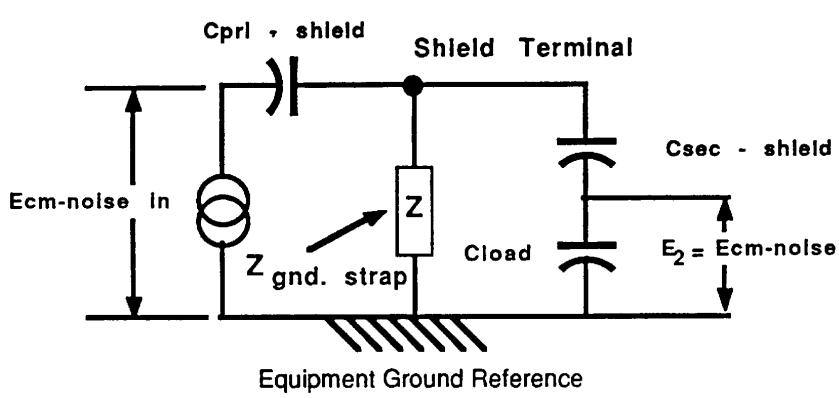

Figure 4-39—Electrostatic shield in transformer that forms a capacitive voltage divider within the isolation transformer for common-mode noise currents

 Copyright © 2006 IEEE. All rights reserved.

Electrostatic shielding can produce practical reductions in common-mode noise transfer across the transformer in ranges from approximately –20 dB to –40 dB and sometimes to –60 dB across some reasonably defined range of frequencies. This will be strongly influenced by specific product design, number of phases, input and output voltage, kVA rating, and the physical size of the transformer involved. Practical attenuation values above this are generally not realizable in real-world installations of the transformer—particularly when the installation conforms to the requirements of the NEC. Performance attenuation tests that involve factory-specified and artificial capacitive voltage divider actions are generally not a valid means of determining the performance of the electrostatic shielding system in practical cases (see Lewis [B38]).

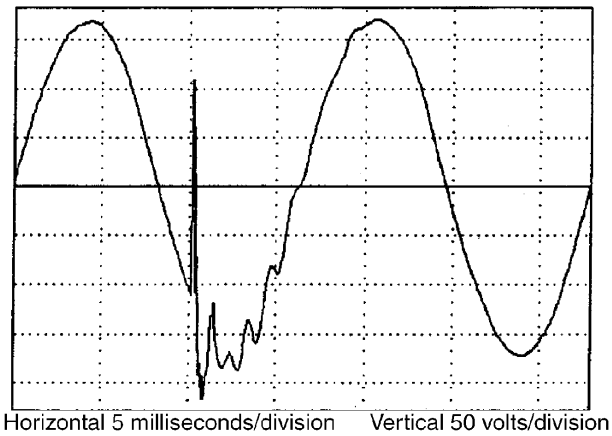

Reprinted with permission from *The Dranetz Field Handbook for Power Quality Analysis* [B60].

Figure 4-40—Phase-neutral transient resulting from addition of capacitive load to the electrical system

Adding more (ungrounded) shields to the primary and secondary windings and operating them at their associated winding's line-voltage potential permits a beneficial reduction in common-mode to transverse-mode noise conversion across the transformer. Several tens of decibels of attenuation across a wide range of frequencies can be realized by this simple method of additional shielding.

At higher frequencies, where wave and transmission line theory must be used, the interwinding shield appears as a point of impedance mismatch from which transient currents (and voltages) can be reflected and re-reflected. This produces attenuation on the downstream side of the point of impedance mismatch. Also, reflections initiated by traveling waves on the ac power wiring to and from the shield are also found on the grounding conductor(s) and grounding system to which the shield has been connected for reference purposes. This latter point is very important and underscores the reason that specialized broadband SRS grounding techniques, as discussed in Chapter 8, must be used when avoiding noise problems in the grounding system, as opposed to SPG and related hybrid designs.

4.7.2.6 Add-on filter components (transformers)

Transformers can be enhanced by using additional capacitors and inductors to create low-pass filter arrangements that use the reactances of the transformer as an integral part of the filter's design. If this is carefully done, the resulting low-pass filter will usefully attenuate high-frequency transients above the filter's –3 dB cutoff point and within the energy handling capability of the add-on reactances used in the construction of the final product. However, as noted in 4.7.2.5, any noise current that is shunted into the grounding system (e.g., via an electrostatic shield or any shunt-connected capacitors to ground) can cause problems depending upon the design of the grounding system (see 8.5 and Lewis [B38]).

Copyright © 2006 IEEE. All rights reserved.

Transients with rise time in microseconds and ring frequencies in the kilohertz range, such as the ring wave defined in IEEE Std C62.41, are not attenuated rapidly by typical power transformers or building wiring (see IEEE Std 141™-1993 [B29] and Martzloff [B39]). Switching of reactive loads, such as transformers and capacitors, create transients in the kilohertz range. Figure 4-40 and Figure 4-41 illustrate waveforms that are not unusual. It is on these and similar types of transients that add-on filter components may be highly useful.

Electromechanical switching devices also interact with the distributed inductance and capacitance in ac distribution and loads to create EFT), as shown in Figure 4-42. EFTs are associated with a broad band of frequencies.

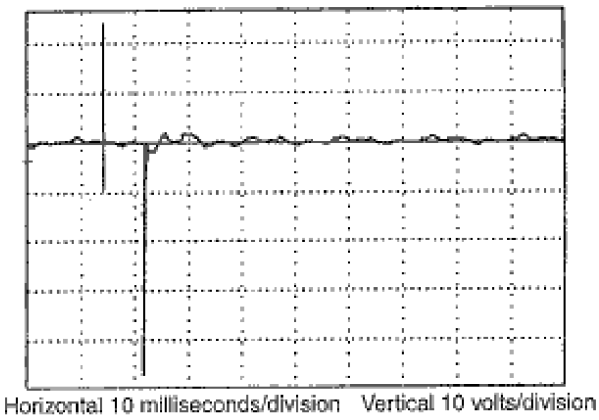

Reprinted with permission from *The Dranetz Field Handbook for Power Quality Analysis* [B60].

Figure 4-41—Neutral-ground transient resulting from addition of inductive load from the electrical system

NOTE—Neutral-ground (N-G) transients must typically be measured at a panel board that is remote from the involved ac system's neutral-to-ground/chassis bond for ac system grounding. Otherwise, the only voltage to be observed will be that developed across the N-G bond jumper itself, and this is likely to be close to zero.

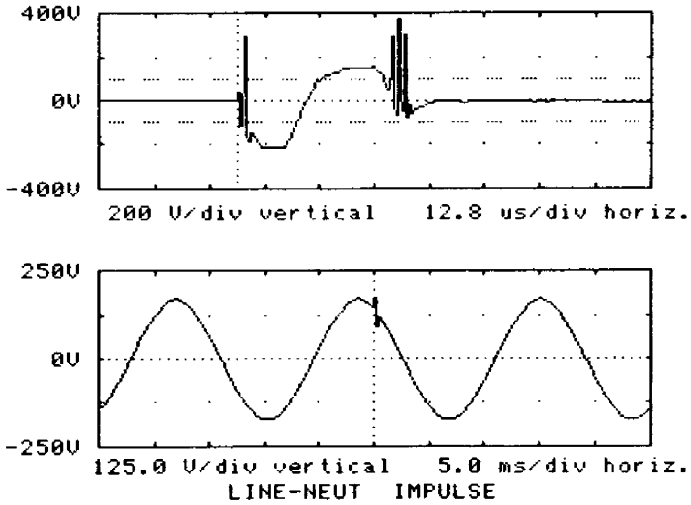

Reprinted with permission from McEachern [B44].

Figure 4-42—Phase-neutral transient resulting from arcing and bouncing contactor

 Copyright © 2006 IEEE. All rights reserved.

4.7.3 Building ac distribution system impedance

The impedance of local electrical distribution systems is mostly resistive and inductive at power frequencies of most interest (60 Hz to 3 kHz, h = 50) and mostly inductive and capacitive at higher frequencies, especially above 1 MHz (see Table 4-6). Therefore, local ac distribution wiring can be used to significant advantage in attenuating unwanted high-frequency noise voltages and short first-transition time surges. This is made clear in IEEE Std C62.41 where reference is made to the attenuation provided on long feeders and branch circuits as opposed to short ones, and to the test waveforms used, which are designed to simulate the effects of lightning (see Lee [B36]).

Actual impedances of ac feeders and branch circuits vary considerably, due both to their configurations and loads. For purposes of analysis and modeling, equivalent circuits of ac branch circuits have been identified (see Golde [B16] and Sunde [B58]). Figure 4-43 depicts the resulting ac branch circuit impedance for such a model as reported in Golde. The general behavior of impedance with frequency, shown in Figure 4-43, is typical for most ac feeder and branch circuits; but actual impedances can vary considerably and resonances above 1 MHz can greatly alter the impedance behavior. It should also be noted that the commonly, but incorrectly, assumed fixed characteristic impedance of 50 Ω for ac distribution circuits can contribute to significant errors if used to calculate surge energy levels (see 4.4.6).

In the higher frequency ranges where wave and transmission line theory predominates over circuit theory, the typical feeder and branch circuit assumes the character of a lossy transmission line of unevenly distributed impedance. It also presents itself with impedance-mismatched terminations at each end (and at any midpoint taps or other connections), which produce reflections and re-reflections of transient currents (or voltages) being propagated on the path.

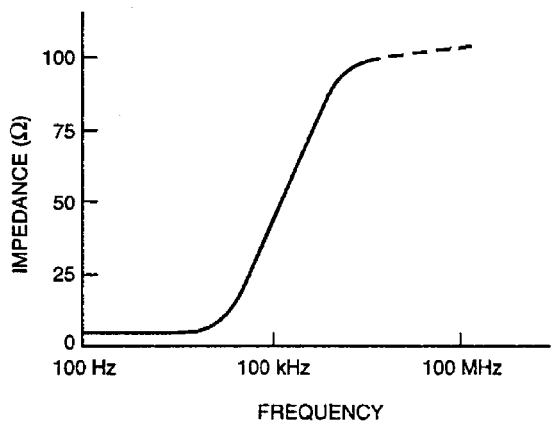

Figure 4-43—Typical ac distribution branch circuit impedance vs. frequency (no load connection)

Copyright © 2006 IEEE. All rights reserved.

Table 4-6—Example cable impedances at high frequencies (copper cable suspended in free air)

Length		L (μH) (>1 MHz)	@ 1 MHz		@ 10 MHz		@ 100 MHz	
m	ft		RF (Ω)	ω*L* = *Z* (Ω)	RF (Ω)	ω*L* = *Z* (Ω)	RF (Ω)	ω*L* = *Z* (kΩ)
4 AWG building wire (25 mm^2)								
3	10	4	0.05	26	0.15	260	0.5	2.6
6.1	20	9	0.1	57	0.3	570	1.0	5.7
12.2	40	20	0.2	125	0.6	1250	2.0	12.5
18.3	60	31	0.3	197	0.9	1970	3.0	19.7
30.5	100	55	0.5	350	1.5	3500	5.0	35.0
4/0 AWG building wire (107 mm^2)								
3	10	3.6	0.022	23	0.07	230	0.22	2.30
6.1	20	8	0.044	51	0.14	510	0.44	5.10
12.2	40	18	0.088	113	0.28	1130	0.88	11.3
18.3	60	28	0.132	176	0.42	1760	1.32	17.6
30.5	100	50	0.220	314	0.70	3140	2.20	31.4

4.7.4 Load impedance

4.7.4.1 Nonlinear loads

As covered is 4.5.2, nonlinear loads are loads in which the current drawn is not in direct proportion to the voltage supplied. Therefore, any load that draws a nonsinusoidal current from a sinusoidal voltage is nonlinear.

Electronic equipment typically contains small motors (cooling fans), transformers, and rectifiers. The transformers and rectifiers are most often used for power supplies, and their outputs are typically electronically regulated to provide constant dc voltage to electronic circuits. There is an incredible amount of variation in the electronic circuits, but the major characteristic of the input impedance of the load, as seen by the ac distribution, is determined by the power supply. The current drawn by a typical power supply is nonlinear. A very common power supply is the switching-mode power supply, which has a peaked current, as seen in Figure 4-21.

ASDs are another very common nonlinear load. There are a number of common topologies used, such as six-pulse, twelve-pulse, and pulse-width-modulated. The wave shape of the current drawn by each different type varies significantly.

Fluorescent lights, particularly with electronic ballasts, are also very common nonlinear loads.

 Copyright © 2006 IEEE. All rights reserved.

4.7.4.2 Linear loads

A linear load is any load, which draws a current that is proportional to the supplied voltage. Resistors, inductors, and capacitors, along with motors, incandescent lights, and resistive heating elements are all linear loads.

The basic components of (passive) load impedance each have a distinct variation with frequency. Resistance, R, ideally does not change with frequency. Therefore, its curve is simply a straight horizontal line, with a magnitude of R ohms above the frequency axis (see Figure 4-44).

Inductive reactance, X_L, linearly increases with frequency (of the form $y = mx + b$). Inductive reactance vs. frequency is plotted in Figure 4-45, with a slope equal to the inductance, L, of the inductor and intercepting at the origin ($X_L = \omega L + 0$).

Capacitive reactance, X_C, is a hyperbolic function of frequency of the form $yx = k$, where the frequency, ω, is the independent variable and $-1/C$ is the constant. Capacitive reactance vs. frequency [$X_c = -1/(\omega C)$] is plotted in Figure 4-46. From Figure 4-45 and Figure 4-46 it can be seen that, as frequency increases, inductive reactance becomes the dominant factor.

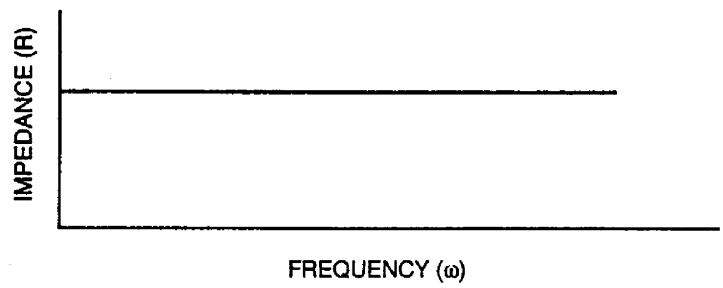

Figure 4-44—Passive load resistance vs. frequency

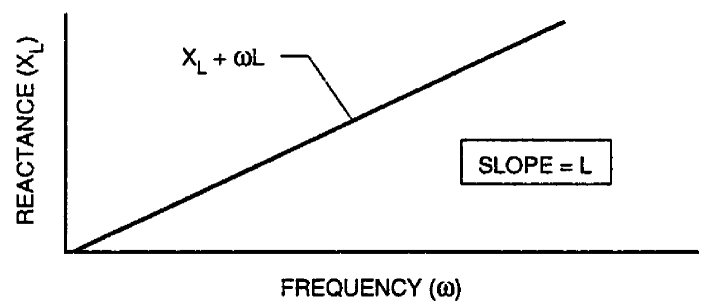

Figure 4-45—Passive load inductive reactance vs. frequency

Copyright © 2006 IEEE. All rights reserved.

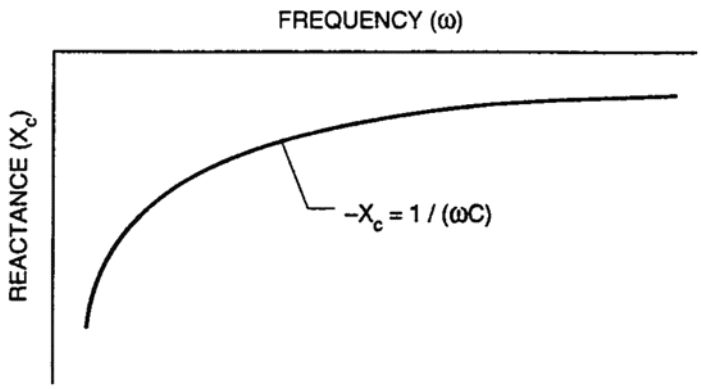

Figure 4-46—Passive load capacitive reactance vs. frequency

4.7.5 AC system resonance considerations

AC circuits characteristically have the following:

a) Capacitive and inductive elements

b) The means to transfer oscillatory energy between these elements

The concept of *resonance* has to do with oscillation of an electrical or mechanical system. Each system has a particular frequency that it will oscillate freely as if stimulated by that frequency. This is true of bridges and buildings as well as piping systems or electrical circuits. This frequency is called the *resonant frequency* of the system.

In an electrical circuit, resonance occurs when the capacitive reactance is exactly equal to the inductive reactance. Since both reactances are frequency dependent, the resonant frequency ($\omega_0 = 2\pi f_0$) of a particular circuit can be determined by Equation (4.17):

$$\omega_0 = 2\pi f_0 = \frac{1}{\sqrt{LC}} \tag{4.17}$$

Notice that the circuit must have both an inductor and a capacitor in it in order to have resonance occur.

If an ac current source exists at or near the circuit resonant frequency, the circuit voltage or current at that resonant frequency can rise significantly, especially when there is little or no resistive load to provide damping {e.g., reduction of "Q" where Q is the quality factor [$Q = (1/R)(L/C)^{1/2}$]}. The voltage or the current will be seen to dramatically rise depending upon where the measurement is being taken in the circuit and whether the circuit undergoing resonance is of the series or parallel type.

It is important to analyze the frequency response of the power system, with the object of avoiding resonance problems. Most unwanted resonance conditions occur on power system wiring due to the presence of power factor correction capacitors interacting with the inductance present on the circuit. To a lesser degree, but still of concern, is the contribution of the shunt capacitors provided with LC low-pass filters on ac power entry ports of some types of electronic load equipment. These resonances tend to occur at harmonic multiples of the power system's fundamental frequency. However, resonance conditions in the performance frequency range, as defined in 4.7.1.2, are not unknown and can occur when the electrical system's higher resonant frequencies are excited by transient current events such as lightning, switching, and fault clearing. The result is a high-frequency oscillatory decaying current flowing in the resonant circuit's path.

 Copyright © 2006 IEEE. All rights reserved.

4.7.5.1 Series resonance

Series resonance on ac power systems results from the series combination of line/transformer inductances and capacitor banks on the ac power system. Figure 4-47 shows all three resistance and reactance elements superimposed on the same impedance vs. frequency graph. Series resonance occurs at the frequency, ω_0, where $|X_L| = |X_C|$. The minimum circuit impedance also occurs at the resonant frequency, ω_0, and is equal to the resistance, R, of the circuit. Series resonance acts as a low-impedance path for harmonic currents at the tuned frequency of the circuit.

As seen in Figure 4-47, at low frequency the inductor has low impedance, but the capacitor has high impedance. Therefore with a series circuit, the net effect is fairly high impedance at low frequency. As resonance is approached, the impedance of the inductor cancels that of the capacitor and the impedance drops. At resonance the capacitor's reactance is exactly equal and opposite to the inductor's and the minimum impedance of the series circuit is reached: the impedance of the resistor alone. As the frequency goes above the resonant frequency, the inductor becomes very high in impedance, making the overall circuit impedance high.

In series resonance, the combination of the inductor and capacitor look like a short circuit to the rest of the circuit in Figure 4-48. However, the voltage across the inductor and capacitor may be many times the voltage of the source, depending on the amount of current flowing and the magnitude of the inductive and capacitive reactances.

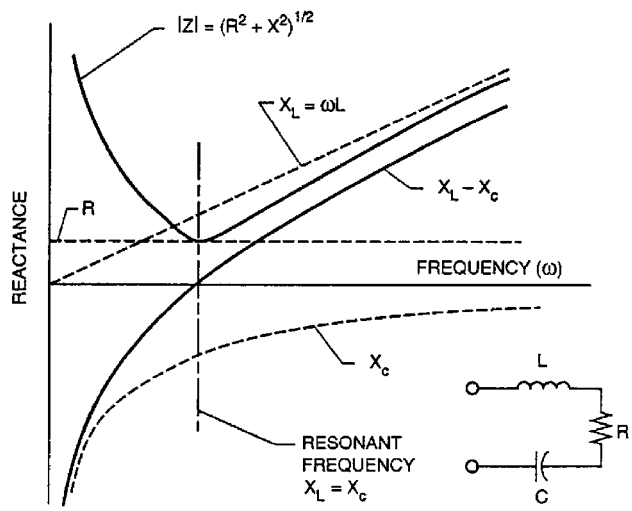

Figure 4-47—Series RLC circuit impedance vs. frequency

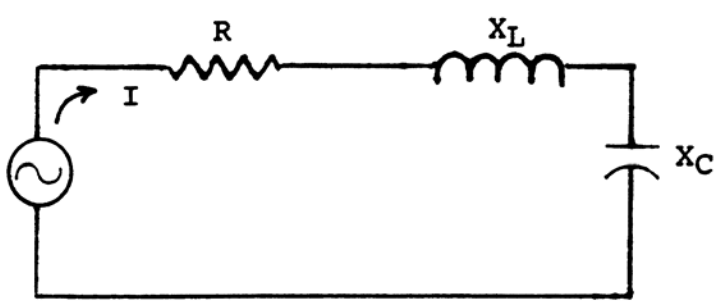

Figure 4-48—Series resonance

Copyright © 2006 IEEE. All rights reserved.

Series resonance can create overvoltage problems. The transformer and capacitor form a series resonance circuit, which is a low-impedance path to currents at the resonant frequency. Nonlinear loads acting as current sources at the resonant frequency provide current to the circuits into which they are connected for ac power. The bus voltage elevates because of the high harmonic current flowing through the impedance of the capacitor. In Figure 4-49, the harmonic currents flow through the resonant circuit formed by the transformer and capacitor.

Industrial facilities with large variable frequency drives are often susceptible to harmonic resonance problems. For example, when a facility with large motor loads needs power factor correction capacitors, the engineer designing the power factor correction must pay attention to the harmonics generated by the adjustable-speed drives, or the facility may end up with a portion of the distribution system that is resonant at a harmonic frequency of the variable frequency drive, such as the 5th, 7th, 11th, or 13th harmonic.

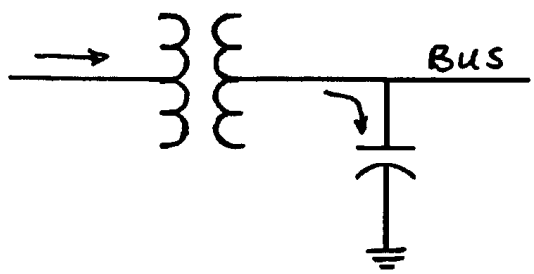

Figure 4-49—Bus overvoltage due to series resonance

4.7.5.2 Parallel resonance

For the parallel circuit shown in Figure 4-50, at low frequency the inductor would be low impedance, so the circuit impedance is low. As the frequency approaches resonance, the impedance of the inductor increases, so the overall circuit impedance increases. At resonance the inductor and capacitor together look like an open circuit, so the circuit impedance is at its maximum, that of the resistor. As the frequency goes above resonance, the impedance of the capacitor drops and approaches zero as the frequency approaches infinity. Figure 4-51 shows the graph of the impedance vs. frequency for a parallel circuit.

In parallel resonance, the combination of the inductor and capacitor look like an open circuit to the rest of the circuit at resonance. The energy to charge the capacitor is discharged into the inductor, and then vice versa, every cycle. However, the current flowing between the inductor and capacitor may be many times greater than the current flowing through the resistor.

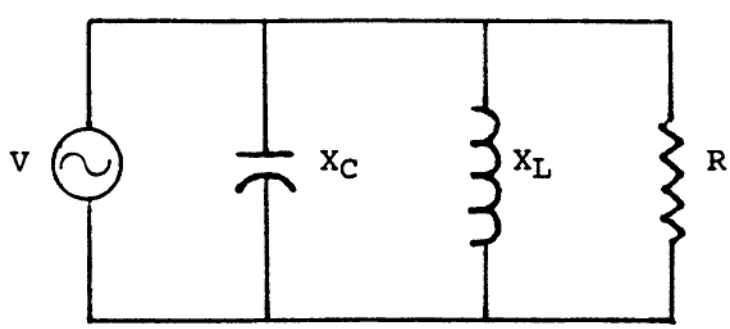

Figure 4-50—Parallel resonance

 Copyright © 2006 IEEE. All rights reserved.

Parallel resonance results from "tank" (*LC*) circuits in the ac distribution system. A parallel-resonant circuit may be thought of as being a series-resonant circuit that has been short-circuited back onto itself. Hence, at the resonant point where $X_L = X_C$, there will be a very low impedance and high levels of current being circulated in the resulting tank. There will also be an appropriately high voltage being developed across each of the reactances due to the voltage drop that the high current flowing through them at resonance creates. The terminals of the tank circuit generally appear as points of nearly infinite impedance and maximum circuit voltage at the resonant frequency. Internally, the tank circuit appears as a near short circuit to the circulating current, which is limited only by the resistive components *R* and *Rac,* present in the path.

Electrical distribution systems are seldom simple series or parallel circuits. The vast majority are combinations of both, often in a complex arrangement. Due to the fact that parallel-resonant paths represent very high impedances for currents at their resonant frequency, they can create voltage-breakdown conditions on conductors and components within, or connected to, the circuit. Harmonic currents at the resonant frequency also may create conditions of high harmonic voltage across the circuit's terminals, which are also connected to the ac source and its load(s). Thus, the resonant tank circuit appears as a voltage source at the resonant frequency. The resonant tank circuit feeds the distribution system in parallel with the fundamental voltage source. As a result, this frequency-dependent harmonic voltage adds algebraically to the fundamental frequency voltage and to any other harmonic voltage waveforms on the circuit, to produce harmonic distortion of the fundamental voltage waveform.

Parallel-resonant circuits behave inversely to the series-resonant circuit. They exhibit very high impedance at resonance, whereas the series-resonant circuit exhibits a very high admittance (low impedance). A diagram of parallel resonance, Figure 4-51, appears similar to the series resonance diagram, Figure 4-47, when voltages are replaced by currents, currents replaced by voltages, and associated parameters are interchanged with their "inverse equivalents" (see Greason [B19]). The total set of terms utilized in Figure 4-51 and their equivalent series resonance terms are as follows:

Terms	Equivalent series resonance terms
Current (*I*)	Voltage (*V*)
Admittance (*V*)	Impedance (*Z*)
Conductance (*G*)	Resistance (*R*)
Susceptance (*B*)	Reactance (*X*)
Capacitance (*C*)	Inductance (*L*)

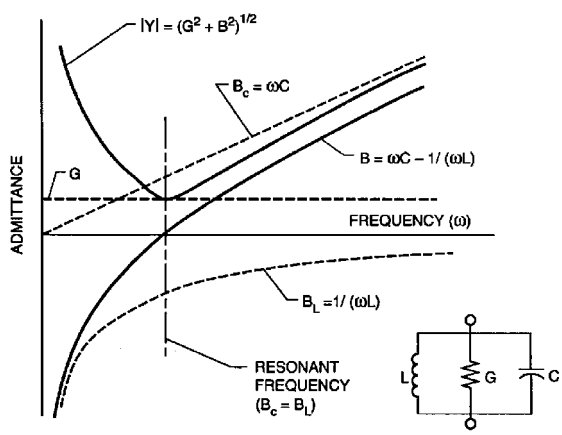

Figure 4-51—Parallel RLC circuit impedance vs. frequency

Copyright © 2006 IEEE. All rights reserved.

Considerable current can oscillate between the inductive and capacitive storage elements of the circuit when nonlinear loads, with a characteristic harmonic near the parallel-resonant frequency, exist in the circuit. Voltage distortion results from these high oscillating current levels. Under certain conditions, the oscillating currents can also emit electromagnetic energy, which can interfere with adjacent signal circuits.

In summary, and by comparison, series-resonant circuit currents oscillate through the ac supply system paths and their source, while parallel-resonant circuits confine such current to the parallel circuit's own loop. Therefore, series-resonant circuits involve the supply, load, and intervening wiring (and all power transport components in the wiring path), with current at the resonant frequency; and parallel-resonant circuits impress voltages (at the resonant frequency) on their source, load, and on the wiring system. These two conditions represent the underlying mechanism for the production of the most common forms of harmonic voltage waveform distortion on the ac wiring system.

4.7.5.3 Resonance on feeders and branch circuits

The conductors used to form feeders and branch circuits possess both distributed self-inductance and distributed capacitance. These are called *stray* or *parasitic reactances*. The self-inductance portion is series distributed in longitudinal fashion along the length of the feeder, branch circuit, or both, while the capacitance portion is shunt distributed between all conductors as well as to equipment ground along the same path. Equipment ground is defined as any enclosing metallic raceway, a *green wire* (e.g., an EGC), or nearby grounded metal if the raceway is nonmetallic. This arrangement forms into a transmission line with reactive circuit elements connected across the ends in the form of the ac power source and load. Both series- and parallel-resonant conditions are thus capable of occurring under proper conditions of excitement. Exciting current is generally provided by switching in the load-source current path, although an exciting current can also be introduced from the equipment ground path via the shunt capacitance.

Loads, such as ASDs for motors, are known to be capable of producing high-frequency currents sufficient to excite the resonant circuit in the feeder, branch circuit, or both. Reflected waves from the motor and power source that oscillate through the intervening wiring path are also associated with this action. This is particularly true for the modern IGBT (or bipolar) drive used with pulse-width modulation (PWM) techniques since very fast transition times can be involved during the transistor's switching between on and off states (on the order of between 50 ns and 200 ns), with switching frequencies of between 2 kHz and 20 kHz. The natural resonant frequency of the typical long branch or feeder circuit between 15 m and 1000 m (49.2 ft and 3280 ft) and the involved ac source-ASD combination is typically on the order of from 1 MHz to 10 MHz (see von Jouanne et al. [B67]).

The only real damping or limit on the "Q" of the resonant circuit in the feeder or branch circuit is generally provided by the path's resistance, which is in series with the oscillating current, and this is typically not sufficient by itself to provide rapid damping. As a result, voltage impulses (e.g., transients) on the order of from 1.3 kV to 1.55 kV can appear across the tank circuit and hence the ASD load terminals (see von Jouanne et al. [B67]). This is highly detrimental to the motor insulation life span and can have similar detrimental or disruptive effects to any electronic loads connected into the same circuit.

The foregoing condition can generally be ameliorated by the application of a three-phase, E-core, series-connected choke of commercial design that provides some additional series impedance and acts as a low-pass filter in the path of interest. Alternately, a physically smaller filter can be applied that is tuned to once and twice the carrier frequency of PWM-type drives. The low-pass characteristic of the arrangement ensures that only the unwanted high-frequency components of the current are attenuated and not the lower frequency ones involved with the efficient transmission of electrical power between the source and load.

Lightning, and in some cases ground faults, can similarly excite the long feeder or branch circuit resonances via the shunt capacitance path from ground. Near-field coupling in the H-field from nearby sources of high-frequency noise sources can also induce excitation current into the self-inductance of the resonant circuit of the feeder or branch circuit.

 Copyright © 2006 IEEE. All rights reserved.

4.8 Grounding subsystems

Much of the confusion about grounding comes from the terminology. The NEC has very specific terminology, which actually alleviates the problem, once you understand it. However, to the novice it is quite confusing, as so many of the terms have *ground* or *grounding* in them. Some of the NEC terminology will be reviewed in 4.8.4 and 4.8.5. First however, the functions provided by the grounding system will be discussed.

4.8.1 Overview

There are two distinctly different functions the "ground" can perform. The first is the safety function of connecting a specific part of the electrical generation, transmission or distribution system, or the utilization equipment to the earth. The earth (or a structure on it) is always part of the circuit for safety, since people stand on it, and connecting a specific part to ground is necessary to minimize shock hazards. The second function is to provide a "common" or "reference" or "point of zero volts," which is usually thought of as a system operation requirement. *All electrical or electronic systems must address both issues to operate properly without creating a safety hazard.*

From the definition of *voltage* as "a difference in electrical potential," it is apparent that a minimum of two terminals is required for a voltage to exist. There can be more than two terminals, and often are, but the need for a "common" or "reference" exists in every circuit (whether it is designated as such or not). Many electronic circuits use the frame they are mounted on for their reference. A 4-wire wye distribution system uses the center point of the wye as the reference. In an automobile, the negative terminal of the 12 V battery (which is connected to the body of the car) is used as the reference.

Notice that in the preceding paragraph there was no mention of "ground" or the earth. The reference does not need to be the earth for the equipment to operate. Connecting the reference to the earth becomes an issue in order to make it safer. This is because the earth already provides one of the two terminals required for a voltage to exist, and people stand on it. Therefore anything they touch with their hand not connected to the earth could have voltage on it and therefore be a shock hazard. This is a primary concern that the NEC addresses in the section on grounding.

The whole subject of grounding becomes quite simple if you keep the above two functions in mind and ask one question: "Is the earth part of the circuit?" From a safety standpoint the answer is almost always "yes." For lightning protection, the answer is a very emphatic "yes." But for many equipment operation issues the answer is "no." Therefore having (or not having) low impedance to the earth affects system operation only when the earth is part of the circuit.

To make the subject easier to grasp, grounding systems can be conceptualized as having three distinct, solidly (e.g., electrically) interconnected, functional subsystems. They are as follows:

a) NEC-described fault and personnel protection (safety) subsystems

b) Telecommunications, data transmission, and signaling circuit grounding (system operation) subsystem

c) Lightning and surge protection subsystem

Note that for well-established purposes of fire and safety from shock, these functional grounding subsystems are all eventually solidly interconnected to a common earth electrode system at the site's service entrance section (SES) in accordance with the requirements of the NEC, NFPA 780, or both. Per the NEC, other earth grounding electrodes may also be involved with the various grounding subsystems (see IEEE Std 142™), but these cannot in any way be isolated (e.g., by electrical isolation or earth resistivity) from one another, or from the site's main earth grounding electrode at the SES.

Copyright © 2006 IEEE. All rights reserved.

All of the previously described grounding systems must be made electrically common to one another by use of a grounding conductor(s) so as to form a single, interconnected earth grounding electrode system at the site. Failure to provide this necessary bonding will place whatever equipment that, or personnel who, may be deliberately or accidentally connected between the two IG systems at whatever potential that can be developed between them. Such a potential is typically due to ac or dc system ground faults, lightning, or other currents that can produce a significant *IR* drop when flowing in the commonly shared grounding medium—earth.

The possibility of a voltage difference still exists even when the earth grounding electrode(s) provided have excellent low-resistance connectivity to the earth, such as in the 1 Ω range. For example, a lightning strike near one electrode with a conservative 20 kA to 40 kA would produce a ground-rise (e.g., ±offset) potential of between 20 kV and 40 kV between two earth grounding electrodes with only 1 Ω of resistance between them (e.g., $E = IR$). This is too high a potential for any reasonably constructed signal-level insulation system to withstand, let alone any connected solid-state electronic equipment components. Alternately, such high potentials are known to produce arcing and dielectric breakdown at points along the current's path and within equipment, and which then may cause fires.[6]

4.8.2 Earth electrode subsystem

The earth electrode subsystem establishes the facility earth ground reference for lightning, electrical fire, and shock hazard purposes (i.e., safety purposes). Signal transport processes and the internal signal processes of equipment are not benefited by this system nor connections made to it except from a safety standpoint. However, improper connection of these portions of an electronic system into an earth electrode subsystem is widely known to produce performance, safety, and equipment damage problems under conditions of power system switching and ground-fault conditions, or lightning. Specific minimum requirements for the earth electrode subsystem are provided in the NEC.

Ground rods and other types of made electrodes connect the grounding system to the earth. There can be a great deal of variation in the resistance (and impedance) the ground rod has with respect to the earth. Soil conditions, particularly with respect to moisture, can cause significant variation in the resistance of a particular ground rod through the course of the year. In some cases, the soil itself is such a poor conductor that special grounding methods, such as chemical ground wells, may be necessary to provide an adequate connection. A typical example of this is in some parts of Arizona and New Mexico, where there is sandy soil that is very dry most of the year. Both states have periods during the year in which they have a significant amount of lightning. The resistance and impedance that the grounding system has to the earth is an important issue in dissipating the energy of a lightning strike and minimizing the voltage gradients.

Testing of various types of ground rods and other types of electrodes has been conducted to determine which type performs the best. The concrete-encased electrode has been one of the best at maintaining a consistent resistance to the earth. Concrete is porous, which traps moisture, and therefore, never totally "cures." From this it can be seen that it is a good practice to embed the bare grounding conductors in concrete where the opportunity presents itself, such as with new construction.

The earth connection generally exhibits an increasing impedance with frequency (see Figure 4-52). This absolutely limits the effectiveness of the earth grounding electrode in relation to high-frequency noise control efforts. This clearly means that the earth grounding electrode system alone is not an effective means of controlling the unwanted effects associated with the higher frequency components of a lightning surge event.

[6]The problem of dielectric breakdown, arcing, and possible fire reaches a high level of probability within electrical or electronic equipment where any insulated conductor referenced to a separate, isolated earth grounding electrode system is brought into an equipment enclosure and where that equipment is itself equipment grounded by connection to the NEC-described safety grounding system consisting of the metal conduit/raceway, EGC system (e.g., green wires), and equipment enclosure.

 Copyright © 2006 IEEE. All rights reserved.

From a wave-theory standpoint, the earth and the connection to it represents a serious impedance discontinuity to almost all short-duration, fast transition time impulse currents. Hence, the connection generates large reflections of both current and voltage when such waveforms are imposed on the earth grounding electrode from either the direction of the earth or the connecting grounding electrode conductor acting as an unbalanced transmission line. Such reflections are then propagated back into the grounding electrode conductor where they are spread to all items of equipment connected into it via the power system and any related EGC networks.

The earth grounding electrode subsystem alone is not generally capable of controlling the hazards associated with power system ground faults. This is reflected in the NEC requirements that clearly state that the earth shall not (ever) be used as the sole path for a current flow. Instead, good grounding/bonding techniques are required as are discussed elsewhere in this chapter, and in Chapter 8 and Chapter 9.

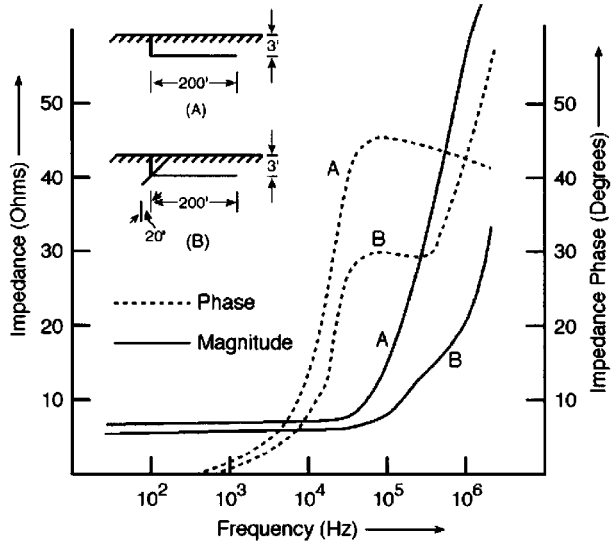

Figure 4-52—General earth grounding electrode system impedance vs. frequency using two comparative earth grounding electrode configurations, A and B

As an example of the foregoing, a 1 Ω earth ground connection associated with a 120 V ac ground-fault limits the current flow to no more than 120 A. This is sufficient to operate many overcurrent protective devices where 10 times the trip rating places the trip into the instantaneous portion of the I^2t "trip" curve. Therefore, circuits provided with overcurrent protective devices such as those in the 10 A to 15 A range may be considered to be "protected," but only for so long as the earth grounding electrode's impedance does not increase over time (which is unlikely). In addition and more seriously, even with the 1 Ω value, commonly used larger rated overcurrent protective devices may be delayed in operation or fail to operate at all on a ground fault. This is why the NEC requires *bonding* (see 4.8.3) of the electrical enclosures and specifies how large the EGCs must be based on the size of the overcurrent protection.

To further illustrate the foregoing important concept, assume that a 1 Ω earth grounding electrode has been installed and that it remains 1 Ω under the given conditions. Next, assume a grounding electrode conductor is connected and that at some higher frequency (from lightning or a surge) the grounding electrode conductor exhibits a 1000 Ω impedance. The total impedance of the arrangement, as viewed from either end acting as a port, is 1001 Ω. Hence, a 1000:1 impedance ratio exists between the far end of the grounding electrode conductor and the earth connection, as seen at the top of the grounding electrode. This means that if only a 1 A current flows in the path (at the higher frequency), roughly 1 kV will exist between earth and the equipment connected to the far end of the grounding electrode conductor. With this in mind, what is the benefit of a 1 Ω earth connection from the standpoint of a common-mode voltage and EMI control?

Copyright © 2006 IEEE. All rights reserved.

Per the foregoing, the common-mode voltage situation is actually quite serious. Take the example of an insulated and isolated signal ground terminal located within equipment that is metal enclosed and properly connected into the ac power system's EGC system. If the insulated-isolated signal ground terminal is connected into an isolated earth grounding electrode (a non-recommended practice in all cases), then any current flow in the impedance between the power system's earth grounding electrode and the signal terminal's isolated earth grounding electrode will produce a common-mode voltage between the terminal and the equipment's frame/enclosure in which it is installed. Since "signal" level wiring and components are not normally provided with other than low-voltage insulation means, and minimum air spacing from exposed terminals to the frame/enclosure are also the rule, a very real probability of voltage breakdown exists between the two (e.g., $kV_{G1-G2} = kA_{G1-G2} \cdot \Omega_{G1-G2}$ is the case with the two separate grounding systems). Thus, the signal level circuits and associated logic and signal level semiconductors, etc., are placed into great risk by this approach, and are not benefited in any manner.

4.8.3 Basic grounding and bonding concepts

There are actually two sections in a proper grounding system: the connection to the earth with an electrode (grounding) and what the NEC calls *bonding* (see Figure 4-53):

> "The permanent joining of metallic parts to form an electrically conductive path that will ensure electrical continuity and the capacity to conduct safely any current likely to be imposed."

The NEC defines *ground* as (see Figure 4-54):

> "A conducting connection, whether intentional or accidental, between an electrical circuit or equipment and the earth, or to some conducting body that serves in place of the earth."

It would eliminate some of the confusion of terminology if we referred to *grounding* as *earthing* when we were talking about the connection into the earth. Notice also that the NEC says "or to some conducting body." In the case of an airplane, it would be the frame and the outer skin. For a ship, it would be the hull.

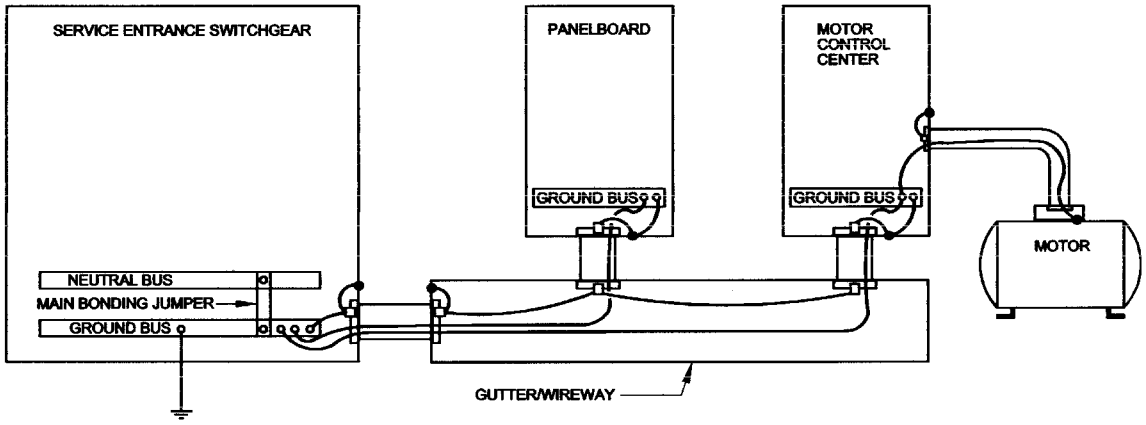

Figure 4-53—Bonding

 Copyright © 2006 IEEE. All rights reserved.

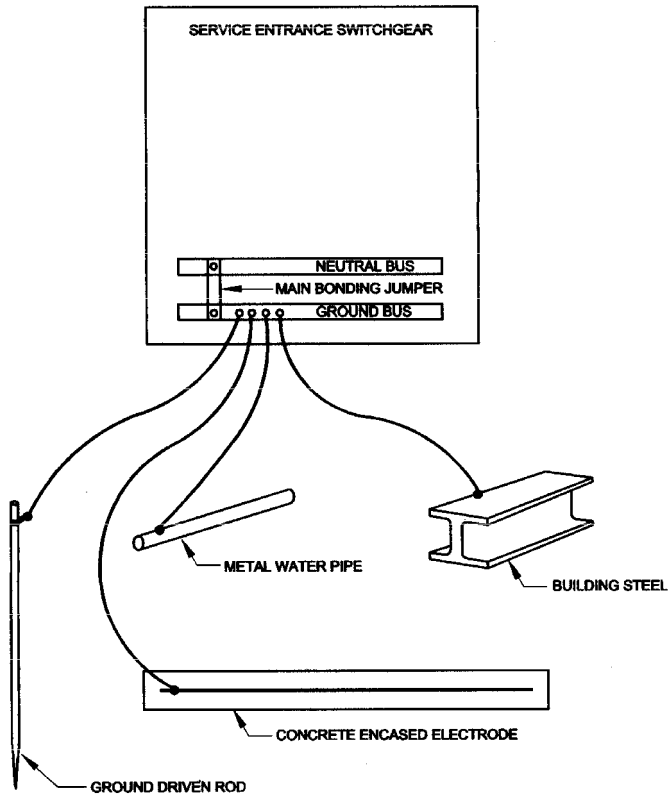

Figure 4-54—Grounded

Bonding is essential to ensure overcurrent protective device operation and prevent shock hazards when electrical equipment fails. By bonding the outside metal parts (to the grounding system) with a conductor of sufficiently low impedance and sized to carry the fault current and allow the overcurrent protection to operate, a person in contact with the faulted equipment is not exposed to hazardous voltages. The NEC would consider this "effectively grounded."

Many of the "grounding problems" electronic equipment experiences that prevent proper operation are "bonding problems" per NEC terminology. Once again the key question is: "Is the earth in the circuit?" Lowering the resistance of the grounding system to the earth only impacts problems in which the earth is in the circuit.

For purposes of grounding, effective bonding consists of a set of grounding conductor interconnections and terminations that, taken together, form a usefully low-impedance path at all frequencies of interest, for the flow of current through them. If done properly, this arrangement then can be used to successfully limit the development of unwanted potentials across the ends of the bonding connection.

The objective is that each termination (bond) be such that the electrical properties of the total path are a function of all of the connected elements and not just the interconnections. Conversely, poor bonding is often the principal cause of many hazardous and noise-producing situations, e.g., unacceptable voltage drops, heat generation, intermittent operation, electrical noise, and high-resistance grounds. A large cross-sectional area grounding conductor is of little use if it is terminated via a poorly bonded connection.

It must be stressed that the low- and high-frequency characteristics of most grounding and related bonding techniques are quite different. Their high-frequency characteristics are of particular importance for most electronic equipment applications where both low-level and high-level, short-duration, rapid transition time

Copyright © 2006 IEEE. All rights reserved.

impulses are the typical currents propagated through the bonding conductor (see MIL-STD-188-124A [B47]).

The following factors are important when characterizing alternative bonding methods:

a) *Contact resistance.* Contact resistance of conductor and shield terminations, and their aging, are of importance.

b) *Dissimilar materials.* Dissimilar materials are problematic in that they often set up galvanic half-cells or rectifying junctions that result in EMI generation at the junction, corrosive failure of the connection, or both.

c) *Skin effect.* High-frequency currents do not penetrate deeply into high-conductivity materials. Therefore, the high-frequency impedance of bonds must be assessed.

d) *Bond reactance.* Bond size, geometry, and the physical relationship between conductors being bonded can introduce reactive components into the impedance of the bond. The minimization of self-inductance in the path is of utmost importance at high frequency.

e) *Conductor resistance.* The total resistance of the bonding conductor's path is of importance when the *IR* characteristics (at dc and low frequency) are such that, for a specific current level, too much potential can be developed across the path for the connection to be effective.

f) *Overheating and fusing point.* The selection of the conductor and bonds must not place the arrangement into safety conflict with its NEC rms ampacity limits or the instantaneous fusing I^2t characteristics of the conductor or its bonding terminations.

4.8.3.1 Grounding/bonding conductor self-resonance effects

Resonance occurs in conductors because of distributed capacitance and inductance along the length of the conductor. Therefore, the conductors of ac electrical distribution systems oscillate when excited at specific frequencies. The frequency of resonance, as discussed in 4.7.5, is a function of the inductance and capacitance of the conductor(s). In most cases, the frequency of resonance is much higher than the operating frequency (60 Hz) or its harmonics. Where self-resonance of grounding/bonding conductors can become an issue is in the MHz range, which is at or near operating frequencies of IT equipment.

The conductors, in essence, can act as inadvertent sources (or receptors) of closely coupled near-field noise, and in the far field they can radiate (or receive) noise by acting as antennae. This type of problem is not often observed in conductors that make up a crude, lossy transmission line, such as an ac system feeder or branch circuit contained in a conduit/raceway, but can be a concern on overhead suspended power and grounding conductors, externally installed grounding/bonding conductors, grounding electrode conductors, and with externally installed signal level and telecommunications cables that are routed in ways that form enclosed-loop areas.

Conductor self-resonance occurs when a conductor's electrical length equals an even or odd multiple of quarter-wavelength of an impressed voltage waveform. When the conductor is self-resonant in odd multiples of quarter-wavelength, the result is a virtual open circuit of nearly infinite impedance, with maximum voltage drop from end-to-end across it. However, under conditions of even multiples of quarter-wavelength resonance, the conductor will appear as a functioning electrical connection from end-to-end and with approximately equal impedance at each end (see FIPS Pub 94). Figure 4-55 depicts this relationship.

The relationship between odd multiples of quarter-wavelength resonant conductor conditions, length, and frequency is shown in Equation (4.18).

$$L_{\text{resonance}} = \frac{cn}{4f_{\text{resonance}}} \tag{4.18}$$

 Copyright © 2006 IEEE. All rights reserved.

where

$L_{resonance}$	is the resonant conductor length (m)
n	is any odd integer (1, 3, 5, ...)
c	is the speed of light in free space ($3 \cdot 10^8$ m/s)
$f_{resonance}$	is the frequency of excitation in the conductor (Hz)

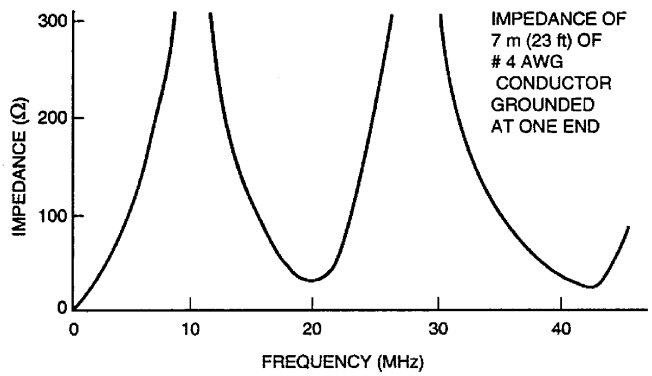

Reprinted from FIPS Pub 94.

Figure 4-55—Resonance characteristics of conductors

In practice, designers must be concerned with the lowest frequency at which a given grounding/bonding conductor length will resonate (n = 1). Therefore, grounding/bonding conductors should always be chosen so as not to have physical lengths approaching resonant conditions of near quarter-wavelength and odd multiples thereof for any electrical noise frequencies that might be imposed on the conductor. One hedge against this is to employ multiple grounding/bonding conductors between the items being bonded to and from, and to make each of a different length than the other. Thus while one path may be undergoing resonance conditions, one or more of the others will not. Usually a difference of 20% in conductor lengths will suffice (see FIPS Pub 94).

This only works, however, when the multiple grounding/bonding conductors are spaced far enough apart from one another to minimize the highly unwanted effects of mutual coupling in the near field (principally inductive) between them. The best hedge is therefore to route them separately and install them on opposing corners of equipment cabinets as compared to attaching them to the same bolt, etc. Thus the grounding/bonding conductors will appear as relatively independent inductive paths for current, and since they are inductive and in parallel, they will present a lower impedance across the path as inductors in parallel are supposed to do.

4.8.3.2 Minimizing inductance on the grounding/bonding conductor's path

Grounding/bonding conductors are also subject to the effects of magnetism when transient currents, such as impulses associated with noise and lightning, are passed through them. Hence, the conductors must be configured in such a way as to minimize the production of transient voltages across their lengths when carrying such currents. This is usually referred to as an $-e = L\ (di/dt)$ effect, and the equation is very useful in representing the voltage developed across an inductance when a current is forced to flow in it by an applied voltage. There is also the problem of what voltage will be developed across an inductance when the driving current through it is abruptly interrupted. What will be the transient voltage developed under this condition?

Copyright © 2006 IEEE. All rights reserved.

The actual problem involves the consideration of both the peak current through the path's inductance and how much voltage can be developed in the distributed or lumped capacitance that is associated with the grounding/bonding conductor. Hence, the real-world problem is represented in Equation (4.19).

$$E_{\max} = I_{\text{peak}}\sqrt{\frac{L_{\text{path}}}{C_{\text{stray path}}}} \tag{4.19}$$

where

$E_{\max}$ is the maximum voltage developed across the ground path
I_{peak} is the maximum current flowing in the ground path
L_{path} is the inductance of the ground path in Henries
$C_{\text{stray path}}$ is the stray capacitance of the ground path in Farads

The use of Equation (4.19) is derived from Chapter 7 in Ott [B49] and is necessary in view of the fact that the stray or parasitic capacitance involved with the typical grounding/bonding path's connections and conductor may not be ignored. In short, the problem does not involve a theoretical inductance in free space not coupled to anything. Further, the stray capacitance may be quite large, as when the grounding/bonding connection exists across two closely spaced-apart metal cabinets or racks, each with significant surface area showing to the other. This forms a neat air-dielectric capacitance that is integral to the understanding of the circuit and that cannot be ignored.

From the foregoing, it should be apparent that there is no real substitute for directly abutting equipment units and multiply bolting them together so as to obviate the need for discrete grounding/bonding conductors. This action results in a two-fold attack on the problem:

a) It minimizes the stray capacitance between the units.
b) It virtually eliminates the inductance across the grounding/bonding path.

As a result, even for a high peak value of current, the developed voltage must be low. Signal circuits routed between two such cabinets are thereby not subjected to high values of common-mode disturbance.

An additional attack on the problem is provided when the designer provides for a an externally applied grounding/bonding structure of a type that discourages the concentration of any current flow in any one or a few of the grounding/bonding conductors making up its network. This is typically accomplished by use of an SRS such as one comprised of a plane or grid. These are typically and respectively called a signal reference ground plane (SRP) and signal reference grid (SRG).

When direct, unit-to-unit grounding/bonding and SRS techniques with low self-inductance grounding/bonding conductors are properly combined, the common-mode transient voltage and current problem is largely eliminated in practice.

4.8.3.3 Length restrictions on grounding/bonding conductors

For the reliable operation of the grounding/bonding conductor, it is recommended practice (see FIPS Pub 94) to install grounding/bonding conductors whose electrical length is a fraction of a wavelength long and where it does not exceed (1/20)λ at the highest expected frequency of interest. While this is an adequate restriction for most commercial practice, more critical applications may require limits approaching (1/50)λ or less. The highest frequency of interest in this case is defined as the fastest transition time in the expected waveform, and not its duration or repetition rate. For example, the important part of a 100 kHz square-wave clocking or data signal that might appear on the grounding/bonding conductor with a 50% duty cycle is the time it takes the impulse's first transition (e.g., leading edge rise time) to go from 10% to 90% of its peak amplitude.

 Copyright © 2006 IEEE. All rights reserved.

Wave and transmission line theory must also be invoked, in addition to circuit theory, to fully understand the operation of the typical grounding/bonding connection under transient impulse conditions. Accordingly, note that a grounding/bonding conductor, whose electrical length is such that an entire common-mode current impulse may be contained upon it while it is transported from one end to the other and with the grounding/bonding conductor acting as a transmission line, is completely useless as a means of either controlling transient voltages or currents in the path. Since the impulse cannot be present at both ends of the path at the same time, there is no way that the potential can be equalized between the end-connected items of equipment. In any case, since the terminations at the ends of such a transmission line are certain to present impedance mismatch, the initial and subsequent current and voltage wavefronts will be reflected and re-reflected back and forth across the path until damped-out by the losses. Thus a single impulse may be turned into many with the ends of the path alternately being placed at different potential and polarity, and at equipotential (e.g., with the impulse in transit and no impulse having yet arrived at either end). Finally, when reflected at a highly mismatched end-termination, a current or voltage may double or nearly so, as the reflected portion of the wave algebraically adds to the impinging wavefront just arriving.

4.8.4 Grounding for fault/personnel protection subsystem

This subsystem is known within the NEC as the "equipment grounding system." This system consists of the solidly grounded/bonded together metal items comprising the frame/enclosure system for equipment, metal conduit/raceway of all types, metal cable armor/shields, bare and insulated[7] EGCs that are pulled with their associated circuit conductors, and externally applied grounding/bonding straps or jumpers, all as required or permitted by Article 250 of the NEC.

The primary purpose of the fault/personnel protection subsystem is safety. It generally has unknown characteristics regarding its impedance (vs. frequency), and it may be single point, multiple point, radial, or hybrid in some manner. Most often it is installed as a radial grounding system in accordance with the basic requirements of Article 250 of the NEC. In general, this subsystem has an unknown, but severely limited bandwidth. However, the NEC requires that it must be of sufficient ampacity and of sufficiently low impedance (e.g., per Section 110-10 of the NEC) at all points to effectively carry power system frequency ground-fault current in a magnitude sufficient to permit rapid operation of overcurrent protective devices or of ground-fault interrupt (GFI) systems.

In addition, the typical wiring used to provide for this grounding system is known to be very lossy at high frequency so that it does not transport high-frequency currents over distance without considerable attenuation (see Martzloff [B39]). It also is known to be constructed for safety reasons, in a robust fashion per the NEC. The general grounding configuration for the basic fault/personnel protection subsystem is shown schematically in Figure 4-56. Note that this is not an SPG system, but is a radial grounding system for the ac power branch circuits and the ac system supplying power to the shown equipment. Other grounding conductors may be connected to the equipment in various ways and for clarity are not shown in this figure.

Note that in order for the fault/personnel protection subsystem to be installed in accordance with the requirements of the NEC (unless excepted by a specific statement in the NEC), it is necessary that all of the involved EGCs be routed with their associated circuit's feeder or branch circuit power conductors. This means that except for short, externally applied bonding conductors connected across very limited lengths of flexible metal conduit (FMC) or liquid-tight flexible metal conduit (LTFMC), they must be run within the same cable sheath, shield, or conduit/raceway, etc., as the associated neutral and line conductors for the circuit. Specific design criteria for the EGC subsystem are provided in Article 250 of the NEC.

[7]Typically, this conductor is referred to as the *green wire.*

Copyright © 2006 IEEE. All rights reserved.

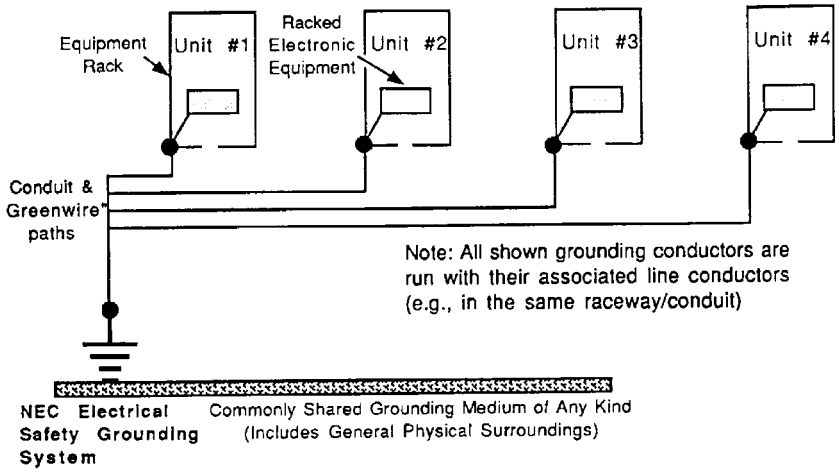

Figure 4-56—NEC-compliant equipment grounding for basic fault/personnel protection subsystem

NOTE—This may be described as a *radial grounding system*, as opposed to an SPG system, since other equipment or ac system grounding connections (intentional or unintentional) may be involved beside the basic NEC ones shown.

4.8.5 Grounding system configurations

There are three common grounding system configurations used with electronic equipment to improve system operation: SPG, TREE configuration, and SRSs. At times a combination of these configurations may be used in different parts of the facility. It is important to understand the purpose, along with the pros and cons of each configuration in order to select the proper grounding for a specific application. See also 9.9 for detailed application considerations for telecommunications grounding and bonding.

4.8.5.1 Single-point grounding

There has been a lot confusion about "isolated grounds" and single-point grounding. The purpose of SPG is to minimize interference problems caused by circulating current in ground loops. This is accomplished by using *insulated* EGC to control where the ground connections are made to the NEC-required grounding system. The insulated EGC originates at the ground pin of a special receptacle that has the ground pin isolated from the mounting yoke, hence the original name *isolated grounding receptacle.* It can also originate on an equipment grounding terminal block in the electronic equipment. The insulated EGC terminates at the point where neutral and ground are bonded at the power source or a separately derived source.

To some people, the term *isolated ground* implied that this receptacle was not connected to the building grounding system, and some manufacturer's literature specified a separate ground for their equipment. To eliminate this confusion, this standard discourages the use of *isolated ground* and *isolated grounding receptacle*. The preferred terminology is *insulated ground* (IG) and *insulated grounding receptacle* (IGR).

Figure 4-57 shows an electronic system to which a supplementary grounding system has been attached. Figure 4-57 is developed from Figure 4-56 by adding the shown supplementary grounding conductors and related earth ground. The arrangement in Figure 4-57 is NEC-compliant, but is likely to also be electrically "noisy." The grounding shown in Figure 4-57 is also not in any recognizable form of SPG, but serves to lead one to the idea of how to unwisely and unsafely modify it to obtain a true SPG configuration as is shown in Figure 4-58. Furthermore, Figure 4-57 represents a very poor electromagnetic compatibility (EMC) practice because of the cabinet penetration by the supplementary grounding conductors.

 Copyright © 2006 IEEE. All rights reserved.

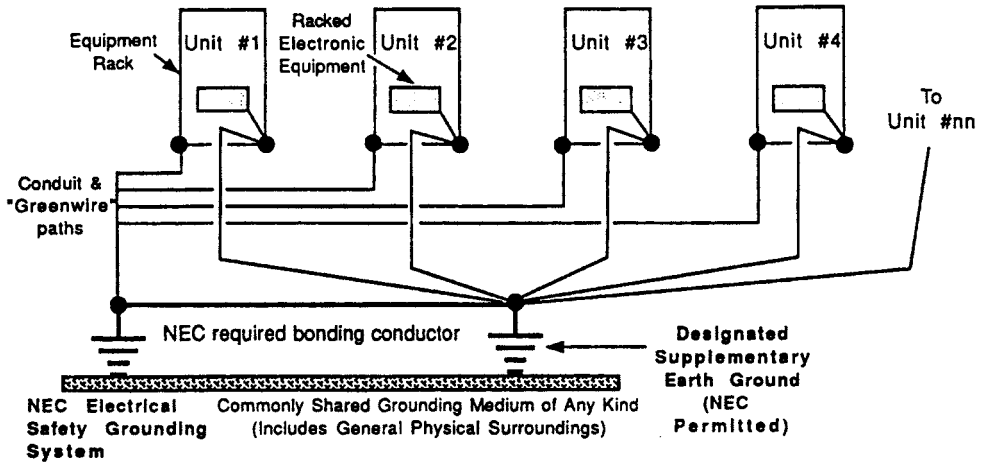

Figure 4-57—NEC-compliant equipment and system grounding employing a supplementary grounding system consisting of an interconnected second electrode at its associated grounding conductors

Non-NEC-compliant SPG designs, such as the basic one shown in Figure 4-58, are sometimes employed as an intended means of "avoiding" whatever noise problems that are perceived to exist with the use of the NEC-compliant-style equipment (safety) grounding system as shown in Figure 4-56 and Figure 4-57. These non-NEC-compliant designs, however, are not suitable for use in the digital signal and system environment for similar reasons to those discussed in 4.8.3. In addition, almost all attempts to implement SPG designs most often create serious (and often subtle) electrical safety conflicts with both the requirements of the NEC and the electrical safety requirements of NRTL-listed equipment. Note that the electrical installation and operation requirements for NRTL-listed equipment require compatibility with the NEC's requirements for equipment (safety) grounding. Typically, these kinds of problems occur when ac or dc powered equipment or related signal circuits are dielectrically isolated or otherwise galvanically insulated from the ac power system's EGC system as described in the NEC.

The design shown in Figure 4-58 does not meet NEC requirements because of the disrupted equipment grounding paths in branch circuits at the point of connection to the load equipment. This design is especially vulnerable to lightning and ground-fault current damage and is generally "noisy" as well.

Note that if LC filters are employed within the equipment, as shown in Figure 4-59 (a variation on Figure 4-58), then the presence of the line-to-ground connected "shunt" capacitors will cause the equipment frames to be elevated in potential due to leakage and conduction currents through them. This represents a ground-fault problem when one of these capacitors fails short. In addition, normally available power supply generated harmonic and other impulse currents passed through these capacitors to "ground" actually makes the resulting ground "reference" noisy in a way just opposite to that intended by the designer.

For example, even when there is a designer's awareness of the need to provide ground-fault current paths there is still an inherent conflict between the design requirements of the typical SPG system and the NEC, in that the resulting SPG design typically provides for all of the grounding and bonding conductors to be installed externally and separately from the EGCs that would normally be installed within the same conduit/raceway as the associated power circuit conductors under NEC requirements. This is shown in Figure 4-60.

Copyright © 2006 IEEE. All rights reserved.

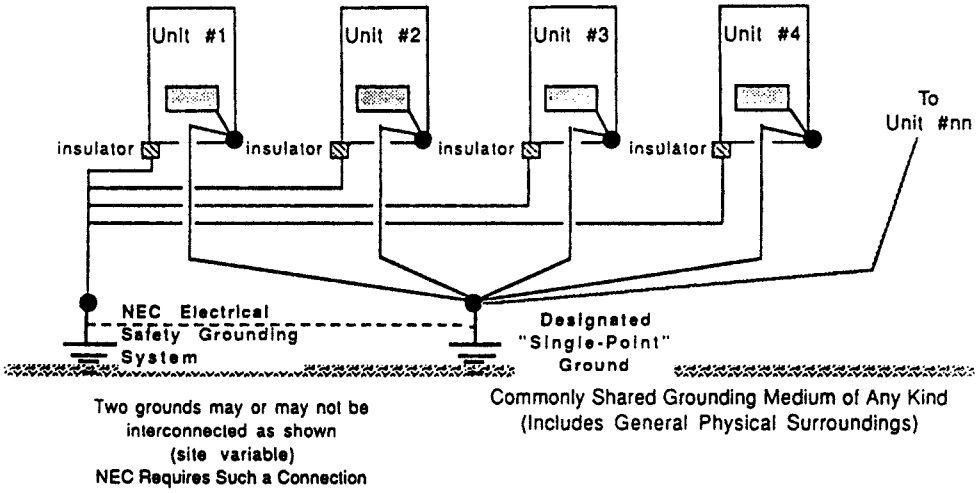

Figure 4-58—Non-NEC-compliant general configuration of an SPG design used with equipment being powered from building ac supply

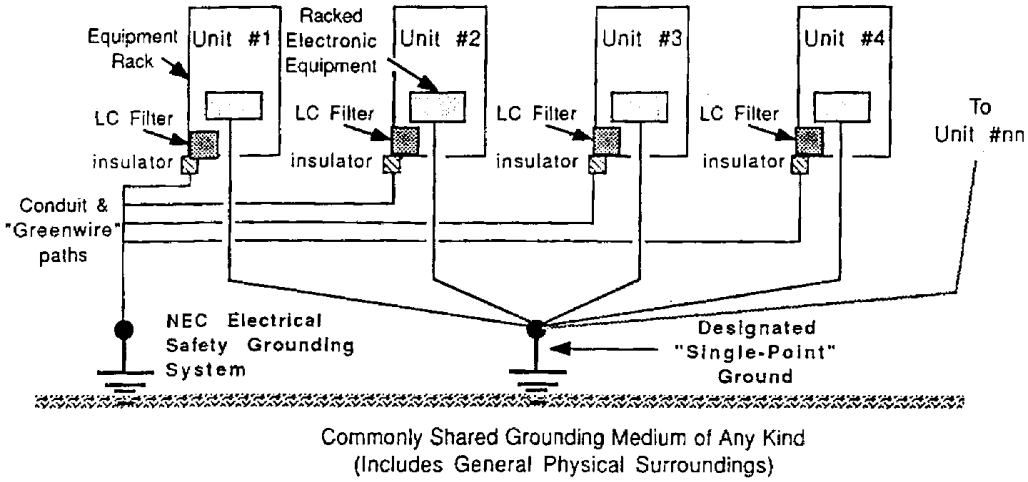

Figure 4-59—Non-NEC-compliant variation of the SPG design of Figure 4-58 where LC filters are employed on the branch circuit interface to the equipment

 Copyright © 2006 IEEE. All rights reserved.

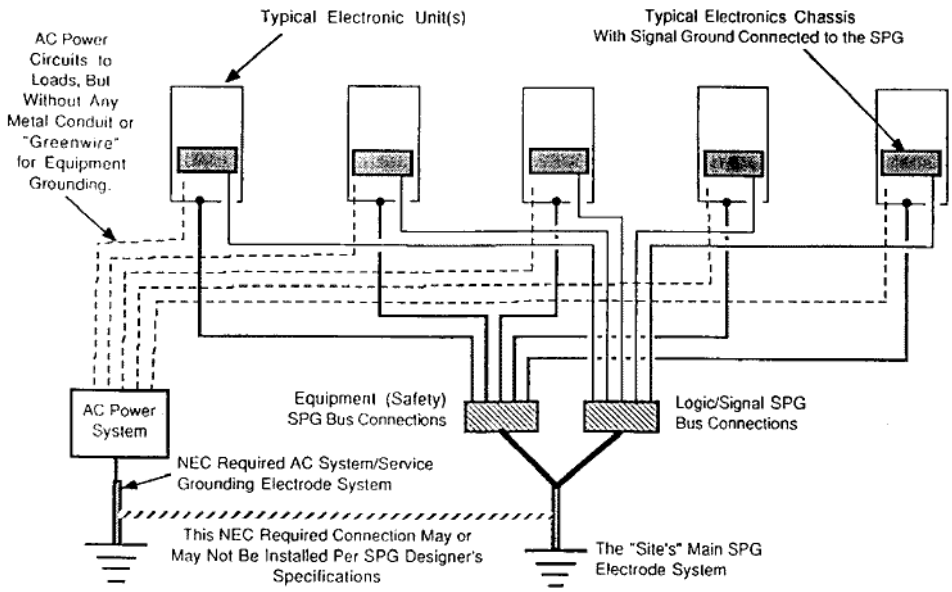

Figure 4-60—Non-NEC-compliant general configuration where an SPG design is employed and where the ac power system's ground-fault path has been implemented exclusively via externally applied EGCs in violation of the NEC

Also, if both the SPG and NEC EGCs are connected to the same points at equipment level, then the wished-for performance of the SPG design philosophy is totally compromised by the myriad paths provided to "ground" via the EGC system in the form of a "ground-loop." Hence, there is a typical pressure brought to bear in such a situation that allows for the SPG conductors to be installed as shown and for the NEC-required EGCs to be either left out, disconnected, or misconnected so as to preserve the philosophically based purity of the SPG design. The general result is a lack of a good ground-fault protection subsystem and a concurrent and serious electrical safety problem.

Also, and in opposition to the typically stated reasons for the SPG design in the first place, there clearly exists a lowered level of reliability for the involved electronic equipment (e.g., computers, process control, and telephone digital-logic-based switching equipment) due to the inherent high impedance presented by the SPG design to high-frequency currents such as noise impulses. This occurs since as stated in 4.6.4, it is almost always a large circuit that must be analyzed using high-frequency wave-transmission line theory and not low-frequency circuit theory.

Therefore, the NEC-described EGC system and SPG designs should not be used to provide a high frequency or signal reference for digital electronics-based equipment of almost any kind. Instead, as recommended practice, a modern SRS system design, as described beginning in 4.8.5.3, should be employed. See also 9.9.17.1 for detailed application considerations for telecommunications isolated bonding networks (IBNs).

With great care, the SPG design can be used successfully where large-scale dc power distribution of some sort is the case, such as with the nominal 48 V dc power for a telephone network and its associated switching equipment and dc power plant such as described in Chapter 9. In this case, the purpose is actually to prevent dc currents from flowing in the metallic portions of the building's structural building steel and piping or conduit systems. This is important to do since such a current flow will cause serious electrolytic corrosion over time and a general weakening of such structures to the point of failure where the corrosion occurs. Note that in this singular case, the SPG design is only used and is effective in the low-frequency regime as a dc system ground reference and fault path. It cannot be used in the high frequency regime as some type of noise control grounding system, where it would be totally unsuitable, as this is inherently a large circuit where wave-transmission line theory must be applied, and not circuit theory. See also 9.9.17.

Copyright © 2006 IEEE. All rights reserved.

The SPG design is typically employed in facilities dedicated to the national telecommunications network and under the exclusive control of the serving telecommunications utility.[8] Under this scenario, the NEC provides a very specific and limited exemption from the requirements of Article 250, and several other areas of NEC concern for the telephone equipment's installation. Importantly, these NEC exemptions are not applicable in government, private, commercial, or industrial facilities in which telephone switching equipment may be installed and be powered from the NEC-controlled building power system. This means that what the telecommunications utility does with its equipment that is installed within its own facility is one thing, but if an NEC violation would occur in some other facility where equipment would be installed, the utility or other entity cannot make the installation without careful conformance with the NEC.

The foregoing leads to the inescapable observation that telephone, telecommunications, or other electrically operated equipment must be OEM produced and certified to be reliably operable when installed, and especially when grounded, per the requirements of the NEC. Otherwise, the equipment is not suitable for use from a safety, performance, or both standpoints and should not be installed. Such a view is also supported by the requirements involved in installing NRTL-listed equipment—and it is now NEC required that telephone and telecommunications equipment be so listed.

4.8.5.2 TREE configuration grounding

A variation on the SPG design described in 4.8.5.1 is the TREE configuration as shown in Figure 4-61. This is a grounding system design that generally takes several SPG common points and collects them as branches on a central grounding-conductor trunk in a design that looks much like a tree with branches. This is a sometimes popular design in buildings where there are multiple floors and areas, all of which contain separate groups of equipment and where there is a believed need to be referenced to a single, central grounding point. This is a generally erroneous view since such a remotely located and singular reference point for an electrically large circuit is not possible to create and effectively operate where high-frequency current conditions are in existence as described in 4.6.4. Therefore, as with the SPG design, the TREE is almost always a large circuit that must be analyzed using high-frequency wave-transmission line theory and not low-frequency circuit theory.

Such a general configuration as the TREE may vary widely in configuration and the design is typically found in telecommunications-dedicated facilities where large dc power plants and telephone switching systems are employed together. When configured as part of an SPG based on Figure 4-58 or Figure 4-59, it will be non-NEC-compliant.

A variation on the TREE design is where the equipment is referenced to both a signal TREE ground-reference system and an EGC system equivalent design that is normally the result of the typical feeder, panel board, and branch circuit wiring used to distribute the power in the building and to the equipment that is connected into the signal grounding TREE. A typical example of this is shown in Figure 4-62 where the ac power system's grounding TREE is composed of the combination of metal conduit/raceway and an EGC system, such as is provided by either a solid ground or IG green wire installation.

Note that in Figure 4-62 a fire and shock hazard situation exists due to the impedance that may exist between the two electrodes used to reference the two systems, and due to the insulation/isolation that exists within the served equipment where the enclosure and "electronics" contained within it are to be kept insulated/isolated from one another because of noise concerns. This hazard exists when a current flow in the commonly shared ground reference medium (e.g., earth, structural steel, and piping system) causes an IZ drop or L (di/dt) related voltage to be developed across the intervening impedance. Under conditions such as from a lightning strike, arcing, as shown in Figure 4-62, can occur within the equipment.

[8] See Section 90-2 of the NEC, Scope, (b) Not Covered. This code does not cover:

(4) Installations of communications equipment under exclusive control of communications utilities located outdoors or in building spaces used exclusively for such installations.

 Copyright © 2006 IEEE. All rights reserved.

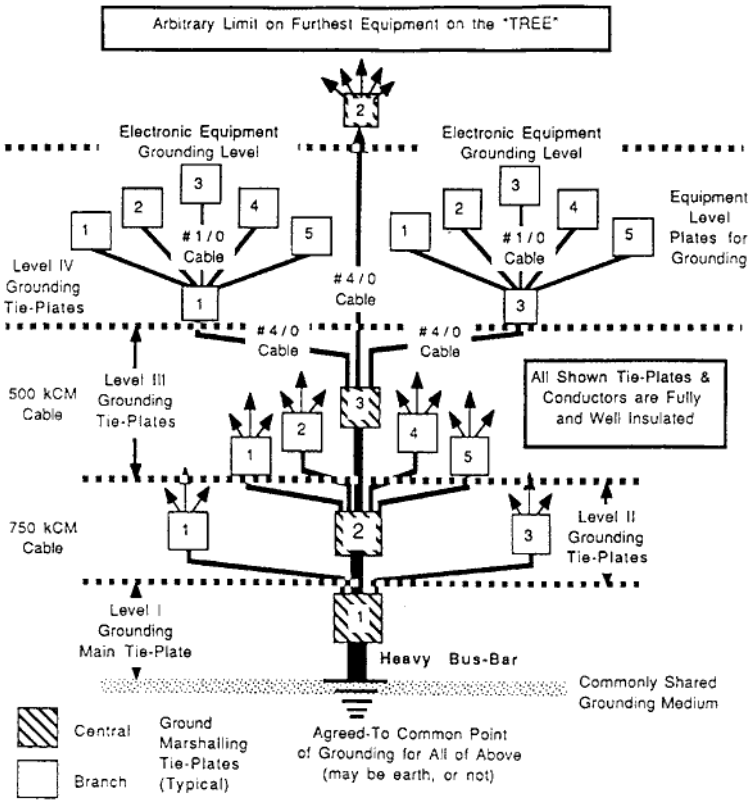

Figure 4-61—Typically non-NEC-compliant macro view of the basic dc (low-frequency TREE grounding system as shown in Figure 4-39)

4.8.5.2.1 Ground mapping

Ground mapping is a diagnostic and maintenance function almost exclusively carried out in relation to SPG and TREE grounding subsystems by the telecommunications industry. Typically, this is a procedure where each grounding conductor associated with the SPG or TREE subsystems and the main grounding conductors going back to the main earth grounding electrode are monitored for current flow conditions. Whatever the conditions, they are then logged for both future reference and for an immediate use in whatever diagnostic or troubleshooting effort may be underway. Of particular interest in these efforts are changes in comparison to previous trends or especially static current conditions that have been logged previously.

The typical instrumentation used in conjunction with the ground-mapping effort is handheld, clamp-on current probe types of instruments. Older equipment was useful for ac only and with a limited bandwidth up to about 1 kHz. More modern instruments have extended this range into the dc level (e.g., via Hall-effect transducers) and up to a few tens of kilohertz. Preferred instruments are true rms reading and indicating as opposed to rms calibrated, average actuated meters, but these are not in universal use for this application at this time. Peak reading meters sometimes are also useful.

The typical ground-mapping effort using these tools is not suitable to determine the current flow and noise conditions on the typical SPG or TREE grounding subsystem and related conductors that might be currently used with digital signal-based equipment. This is the specific case where these subsystems are in use with digital signal-based equipment such as telephone electronic switching systems (ESS), computers or ITE, process control, or similar equipment operating with impulse types of signal processes. In these latter cases, only high-frequency instrumentation can be used, which can capture an impulse or a traveling wavefront event for later examination, etc.

Copyright © 2006 IEEE. All rights reserved.

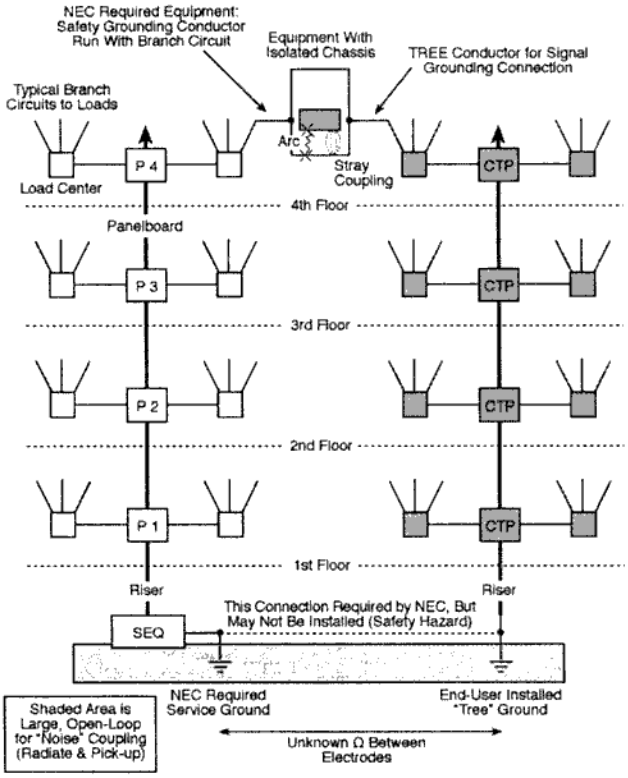

Figure 4-62—Interconnections between the TREE grounding system and the typical NEC-compliant ac system, feeder, and branch circuit equipment grounding structures for the electronic equipment

The ground-mapping effort using the typical handheld, clamp-on current indicators is useful to detect unwanted leakage of ac and fault currents related to the power system, and emanating from poor insulation, leakage, and other continuous currents from line-to-ground/chassis-connected circuit elements [e.g., such as filter capacitors, and metal-oxide varistors (MOVs) and other SPDs], or misconnections. These test equipment items are also especially useful to detect the unwanted flow of dc in interconnecting signal cables between units and the SPG or TREE grounding system's conductors. These are currents that should not normally be present at all, or may be present only if balanced or distributed in some fashion according to OEM specifications, etc. This latter situation is very important if, for example, electrolytic corrosion (e.g., electrolysis) is to be prevented in the related building's metallic systems—especially the structural building steel system or flammable gas piping.

The readings obtained during the ground-mapping effort may generally be relied upon when the issue is dc. However, when ac is being considered, coupling paths must be allowed for and the failure to do this often leads to a misdiagnosis of where an ac is "coming from" and where it is "going." The ground-mapping effort typically looks at the SPG or TREE grounding subsystems much like a water piping system in which there is no other way except via the "pipe" for current to flow in the pathways. This is erroneous since a great deal of leakage current can be seen to flow in these systems as a result of reactively coupled currents in the power system's fundamental and harmonic current ranges. Hence, a current can be seen to flow in a conductor being examined, but which can be shown to have only one point of galvanic connection to anything else. This is baffling, since without understanding of the coupled paths, the "ground loop" is inferred but cannot be found.

One such commonly misunderstood and nearly ubiquitous coupling path is from the metal base of an equipment cabinet or rack, through the concrete subfloor, and into the grounded structural building steel or

 Copyright © 2006 IEEE. All rights reserved.

underlying "Q-decking" that is being used to reinforce it. This latter arrangement is that of a leaky capacitor that will pass impulses and ac between the equipment's grounded enclosure and the building's overall structural building steel grounding system. Related currents are, of course, seen to be flowing in various parts of the SPG or TREE grounding system and cannot be explained or corrected by efforts designed to consider galvanically conducted currents alone. In cases such as these, the typical action of adding an insulating mat below such a cabinet can be seen to have the generally opposite effect as intended if it creates a better dielectric constant between the two plates forming the capacitor. DC, of course, would be better blocked by such an effort.

4.8.5.3 Modern signal reference structures

An SRS is the externally installed network of conductors used to interconnect the metal frames, enclosures, and logic or signal level power supply common terminals of the subject electrical and electronic equipment to one another. This network may be a recommendation from, or an actual part of, the equipment's OEM installation package. Most often it may be part of an aftermarket, field-installed wiring effort. The SRS is also an integral part of any SPD network system that is used on either the ac or dc power, or signal (including telecommunications) circuits connected to the electronic equipment that is also attached to the SRS. The SRS is also not intended to be dielectrically or galvanically insulated or isolated from the building electrical system's EGC system that is part of the fault/personnel protection grounding subsystem.

The principal purpose of the SRS is threefold. It is intended to

a) Enhance the reliability of signal transfer between interconnected items of equipment by reducing inter-unit common-mode electrical noise over a broad band of frequency.

b) Prevent damage to inter-unit signal circuits by providing a low-inductance, and hence, effective ground reference for all of the externally installed ac and dc power, telecommunications, or other signal level, line-to-ground/chassis-connected SPD equipment that may be used with the associated equipment.

c) Prevent or minimize damage to inter-unit signal-level circuits and equipment power supplies when a power system ground-fault event occurs.

The particular nature of the digital system grounding problem is that unlike analog systems, or other narrow and limited bandwidth equipment designs, short-duration, fast-transition time impulses related to the desired signal processes or interference to them, are propagated along discrete conductors that comprise the usual grounding paths existing between elements of a logically interconnected system. These paths include the following:

— The NEC-described power system's EGC system.

— Any field-installed grounding/bonding jumpers or straps connected between units in whatever fashion (e.g., SPG, MPG, "daisy-chain," and "radial").

These typical grounding systems are not generally suitable for use with currents above a few tens of kilohertz. Therefore, the typical results obtained from misusing them in this manner (e.g., for digital system process grounding) will range from marginally unreliable to the totally unworkable.

The foregoing limitations assigned to the indicated grounding system types are generally due to the typically high overall impedances, impedance discontinuities at junctions and splices (important when considering the grounding path as a transmission line), and excessive high-frequency losses that they present to impulses along the subject path.

The need for an SRS is minimal when all of the inter-unit signal-level and telecommunication circuits are interfaced to the associated electronic equipment via optically or isolation transformer coupled means, and where these interfaces have good common-mode voltage breakdown characteristics.

Copyright © 2006 IEEE. All rights reserved.

However, the need for an SRS may easily rise to that of a requirement in the event any of the following three conditions are established:

1) When the logic ac-dc power supplies used in the associated electronic equipment are installed with one of the terminals (e.g., the "common") connected to the equipment's metal frame/enclosure. This is typical and recommended practice in the commercial ITE and electrical business equipment industries, and others as well.

2) When the signal-level circuits and logic ac-dc power supply common terminals are OEM dielectrically insulated or galvanically isolated from equipment ground against recommended practice, and are instead connected to an insulated "ground" terminal that is intended for connection to an externally installed signal ground reference circuit.

3) There are actual performance problems occurring with the equipment, which can be assigned to common-mode electrical noise or similar common-mode interference related to the equipment's existing grounding system, whatever its design, or to the signal-level inter-unit cabling system.

Any grounding system that employs long ground conductors, as generally illustrated in Figure 4-63, will exhibit higher impedances at higher frequencies, and in general, this is most undesirable. The impedance in the grounding paths is basically uncontrolled and usually very high at frequencies above a few kilohertz. Therefore, useful SRSs require the existence of a grounding structure that most nearly mimics the ideal of an equipotential ground plane throughout the frequency range of interest (often from dc to several tens of megahertz). Such a design is shown very generally and in schematic form in Figure 4-64.

The foregoing requirements can be practically met by use of an SRS in the form of a signal reference plane (SRP) or signal reference grid (SRG) that is grounded/bonded to the associated electrical and electronic equipment via direct means (ideal) or, more likely in practice, by many and multiple physically short-length and low-inductance design grounding/bonding straps. The typical result is a practical and good-performing broadband grounding system that is quite compatible with modern telecommunications and other digital-signal-based forms of equipment, such as computers and other ITE. It is also a grounding system design that is not known to create safety conflicts with the NEC and related NRTL-listed equipment installation requirements.

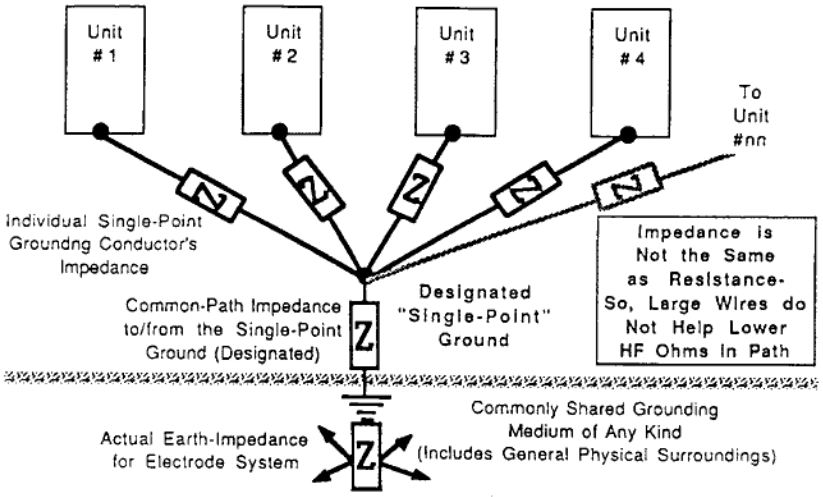

Figure 4-63—Typical Z = R ± jX impedance values

 Copyright © 2006 IEEE. All rights reserved.

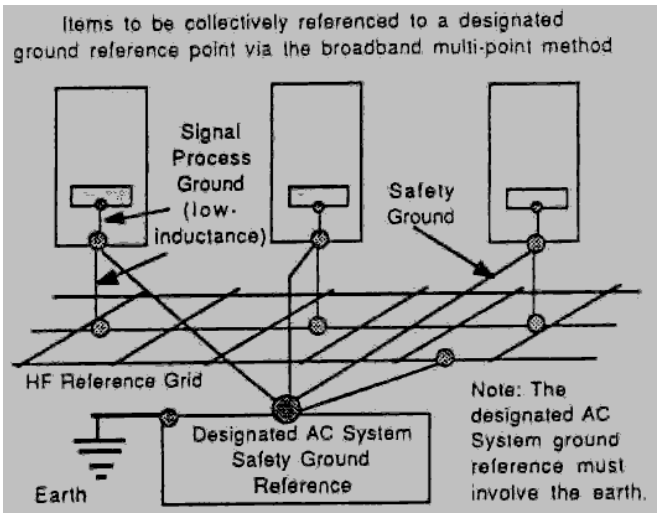

Figure 4-64—Recommended practice (simplified diagram) for dc—high-frequency grounding of electronic systems powered from building ac power system

4.8.5.3.1 Signal reference structure frequency requirements

SRSs are generally required to operate effectively over a broad range of frequency from dc to several tens of megahertz. This requirement generally precludes the use of the foregoing SPG and TREE forms of grounding, and it places some constraints on the recommended practice SRS methods that are actually used.

Surges having high-frequency components require current return paths that are of low impedance over the same range of frequency that the surge contains. Otherwise, an interfering or damaging potential may be developed across the high impedance presented at one or more of the frequencies it contains and which will then affect the connected equipment. Therefore, signal reference grounding systems, which provide the required low-impedance return paths, must be designed for low-impedance characteristics over large frequency ranges, e.g., dc to tens of megahertz. These are correctly referred to as *broadband grounding systems.*

Figure 4-65 shows the residual voltage vs. conduction bandwidth for the IEEE C62.41 100 kHz ring wave. This waveform is selected to show that such a commonly occurring surge possesses several hundred volts at frequencies greater than 1 MHz. Surge amplitudes of the order of 100 V_{peak} are known to be destructive in digital circuits; therefore, the signal reference grounding system must exhibit low impedances at frequencies >10 MHz. The upper frequency limit of practical interest (today) for most commercial equipment is considered to be in the range of 25 MHz to 30 MHz.

An example where an EGC green wire only grounded system was compared to one grounded by broadband means where both green wires and an SRG [0.6 m · 0.6 m (2 ft · 2 ft)] are employed in parallel; these are compared in Figure 4-66 (see FIPS Pub 94). While this test did not go beyond 7.0 MHz, it well illustrates the example if one extrapolates it.

Copyright © 2006 IEEE. All rights reserved.

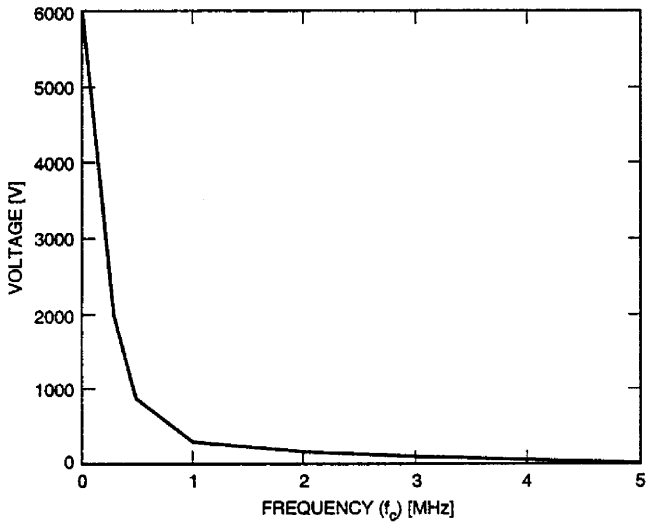

Figure 4-65—Residual surge voltage vs. frequency for 100 kHz ring wave

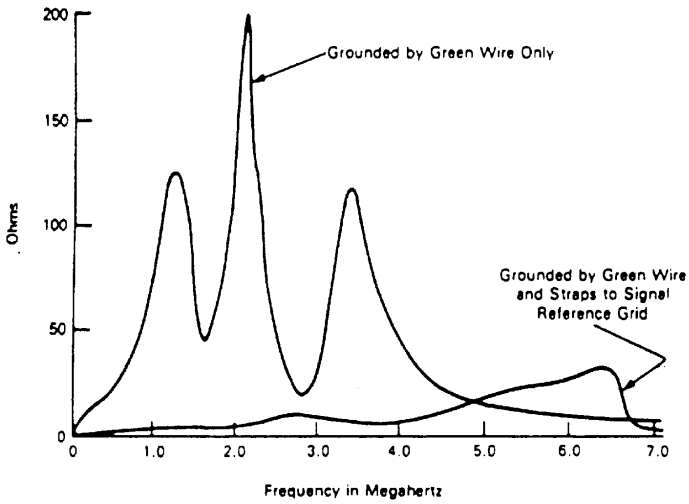

Figure 4-66—Impedance of grounding conductors for a computer system

SPG, TREE, and SRS design bandwidths compared

In general, the SPG and TREE designs are known to be useful for grounding analog-signal based equipment that operates with slow dc signal-level transition times, relatively low-frequency continuous-wave (CW) signals, and with very limited band pass. For example, narrow band-pass characteristics might be those that range from dc to about 30 kHz or a little beyond. However, if the electrical dimensions of the SPG or TREE grounding subsystems in these cases are kept modest by using a compact design, the effective upper frequency range and signal band pass may sometimes be extended by an order of magnitude to about 300 kHz. Since 300 kHz is still a relatively low frequency in respect to the typical signal transition times and related bandwidths for signal circuits, as found in modern digital logic- and signal-based equipment, both the SPG and TREE designs are almost always totally unsuitable for use with these kinds of equipment.

 Copyright © 2006 IEEE. All rights reserved.

Note that the SPG and TREE designs are useful where ac power system fundamental and harmonic currents flowing in the grounding system generate noise that can truly interfere with the operation of limited bandwidth equipment,[9] such as for analog data acquisition and control systems and where no digital-based equipment is also being operated on the same grounding system at the same time.

Beyond 300 kHz, the SPG and TREE designs are almost always totally unsuitable for use in any application since they are almost always large circuits in relation to the currents that flow in and on them (see 4.6.4). Therefore, circuit theory is not useful in analyzing them and wave-transmission line theory must be used. For example, even if the signal processes have restricted bandwidth, electrical noise and surge phenomena that can appear on the SPG or TREE grounding system are not so limited and may have very fast transition time, large amplitude, and from short to fairly long duration. Thus, EMI that can cause problems ranging from interference with equipment's operation to actual electrical damage to it cannot be reliably controlled by the typical SPG or TREE grounding subsystem.

Digital signal- and logic-based equipment with high-frequency band-pass requirements that range from dc to above 300 kHz require a compatible signal grounding subsystem to be used with them in order to obtain best reliability. This can only be accomplished via wide band pass, modern SRS methods such as are provided by the SRP or SRG and related low-inductance multipoint grounding/bonding jumper techniques.

Where both low-frequency analog signal-based equipment and high-frequency digital signal- and logic-based equipment are used simultaneously within the same electronic system, only one form of SRS can be implemented and it must be the one most compatible with both forms of system requirements—and the NEC described equipment grounding system. Since the modern SRP or SRG is a broadband grounding system whose useful operating range overlaps and far exceeds that of the SPG or TREE designs, and as it does not conflict with NEC requirements, it becomes the de facto design requirement in these cases. It is therefore recommended practice.

A useful discussion of the foregoing subject is presented in MIL-STD-188-124A [B47].

4.8.5.3.2 Signal reference structure as an equipotential plane

An equipotential plane is a mass (or masses) of conducting material that, when bonded together, provide a uniformly low impedance to current flow over a large range of frequencies (see EPRI TR-102400-V2 [B14], MIL-HDBK-419 [B46], and MIL-STD-188-124A [B47]). The equipotential plane is only achievable in practice when the area of coverage may be conservatively defined as being a small circuit (see 4.6.4), and where circuit theory may be applied to explain its actions as opposed to having to use wave-transmission line theory as with a large circuit.

Because of the foregoing small-circuit restriction, the equipotential plane is most commonly found as a component part of an electrically small circuit such as where it consists of the ground plane material on a typical logic level printed circuit-board assembly. With the limited dimensions and careful engineering required for such circuit assemblies, equipotential characteristics can largely be achieved. However, such characteristics are not likely to be realized except for lower levels of current at dc and for a few tens of kHz when physically and electrically large structures are considered, such as where whole rooms are served by a ground plane or grid dedicated to the signal grounding subsystem function. This is not to say, however, that the ground plane or grid as described is not useful as it is an important and effective means of providing good, broadband grounding effects that cannot be otherwise achieved.

Advantages of an equipotential plane are as follows:

a) Low-impedance return path for RF noise currents

[9]This is not a likely problem with digital-signal and logic-based equipment that operates with a fast transition time on the signals (e.g., over 300 kHz). This is due to the impedance transfer function of the involved circuits and the fact that most of the subject circuits have bandpass characteristics that are not very, or are not at all, responsive to such low frequencies.

Copyright © 2006 IEEE. All rights reserved.

b) Containment of EM (noise) fields between their source (cable, etc.) and the plane
c) Increased filtering effectiveness of contained EM fields
d) Shielding of adjacent circuits or equipment

Embodiments of equipotential plane structures include the following, but only when they are acting as small circuits in relation to the current's wavelength:

1) Conductive grid embedded in, or attached to, a concrete floor
2) Metallic screen or sheet metal under floor tile
3) Ceiling grid above equipment
4) Supporting grid of raised access flooring (computer rooms, etc.)

4.8.5.3.3 Signal reference planes

The typical broadband SRP structure achieves usefully low impedances over large frequency ranges by providing two effects that directly relate to the current flow in the associated conductor carrying the signal, noise, or transient current of interest, as follows:

a) A closely coupled path for near fields
b) A multitude of right-angled and parallel paths through the mass of the SRP

In explanation of item b), a "plane" form of SRS, it is probably best regarded on an ohms-per-square basis with each square being described as a shorted turn of four impedances a right angles as shown in Figure 4-67. This works since it provides a fairly uniform and consistent point of reference for any size SRP structure that may be considered, where it is all of the same construction. This view of the SRP dovetails with the correct notion that it normally and most desirably exhibits a low amount of current density on a per-square basis when a given current flow within it is being considered.

From a signal transport standpoint, the foregoing effect in item a) is predominant at the higher frequencies while the effect in item b) extensively appears at dc through the lower frequency range, after which it diminishes as the frequency is raised. For example, with high-frequency current flowing in a conductor that is closely coupled to the SRP, the mirror or image current for it will flow in the volume of the SRP just beneath the subject conductor and concentrated in a narrow strip that closely follows the exact route of the conductor. At dc and at low frequency this is not the case, and the current tends to widely spread out through the network of interconnected shorted turns in the plane.

Hence, "ground current" in the SRP is directly related to frequency, the amplitude of the current in the image grounding conductor coupled to it, and the image conductor's geometry. A gradual transition from the diffused form of current flow in the SRP to the image following path is the typical case as the current's frequency is raised. This is important since it indicates the difficulty in defining a sharp cutoff point between one way of looking at the situation as compared to another. Again 4.6.4 can be used as a guideline to establish the boundary of performance on the SRP between circuit analysis at low frequency and wave theory application at higher frequency.

For transient currents (e.g., faults and noise) injected into the SRP and that are considered using low-frequency circuit analysis techniques, the impedance presented by the design is more like that of a nearly infinite number of junctions with a somewhat uniform surge impedance Z_0 for each. This allows for the current to flow in these paths between the injection point and to any number of exit points for the current to make its return from. Hence, currents through the SRP in amperes are quickly dispersed from an injection point with milliohms of resistance into numerous other junctions, each also of milliohms of resistance. This causes injected amperes to be quickly reduced to mA, and mA to µA, and so on, as shown in Figure 4-68, as the current moves through the plane's junctions to the exit point(s). This significantly minimizes the voltage drop that can be developed between any two points of the SRP due to the small amount of current that can flow though whatever the impedance of the path is between these points.

 Copyright © 2006 IEEE. All rights reserved.

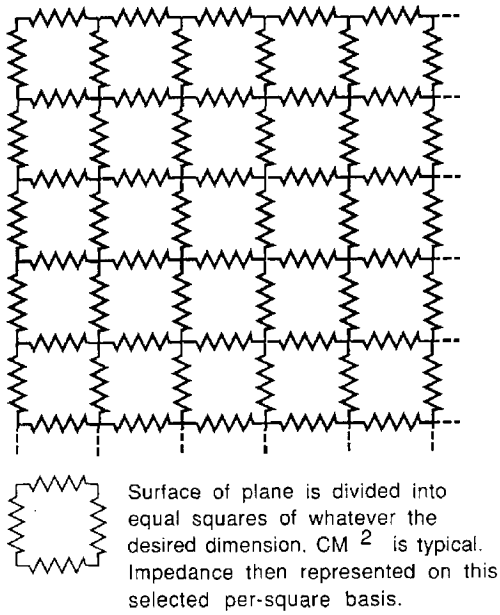

Figure 4-67—General view of the impedance of an SRP considering its impedance using the ohms-per-square method

In the same manner as current density in the SRP is reduced as the current moves away from the injection point, the current can be reconcentrated as it approaches a singular exit point for return. This clearly implies that sensitive equipment referenced to the SRP will be subject to less interference when it is located on and grounded/bonded to/from the SRP at a point separated from either an injection or exit/return current point. In practice, this simply means that the electronic equipment should be kept away from the perimeter of the SRP and any penetrations of it by metallic items likely to act as current injection or return points. A meter or so of separation is sufficient in most cases.

Note that as the current density is reduced as it progressively moves through greater area on the SRP, there is a concurrent reduction in near-field effects, especially the H-field, which is directly related to the amplitude of the current producing the magnetic field. This is a near-field phenomena that is often most troublesome at power system fundamental and harmonically related frequencies through several tens of kilohertz (especially during ground faults). This highly beneficial effect therefore means less unwanted H-field coupled EMI into nearby, parallel-routed, signal-level cables and other grounding/bonding straps, etc. This occurs as there is only a finite amount of injected and concentrated current at one point, which must then be divided up and therefore become less concentrated as current flow spreads into greater and still greater SRP area.

The electrical and grounding system's "buildup" is shown in Figure 4-48 and Figure 4-49, where the overall relationship between the load equipment and ac power system's equipment and ac system grounding is shown in Figure 4-69, and where the recommended signal reference system is then added as shown in Figure 4-70. As can be seen, the two are connected in intimate electromechanical parallel and are not isolated or insulated from one another in any way.

Copyright © 2006 IEEE. All rights reserved.

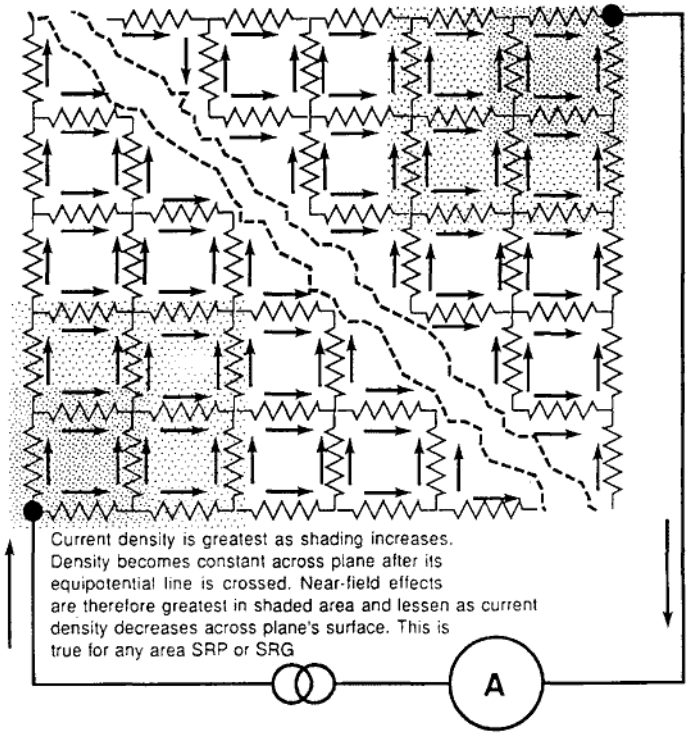

Figure 4-68—General configuration of an injected and return current flow through an SRP considering its impedance using the ohms-per-square method

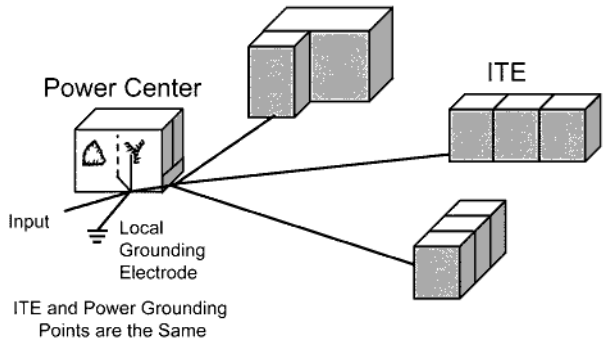

Figure 4-69—Electronic system grounded by ac power safety grounding subsystem only as a radial grounding design using the ac system as the "hub"

 Copyright © 2006 IEEE. All rights reserved.

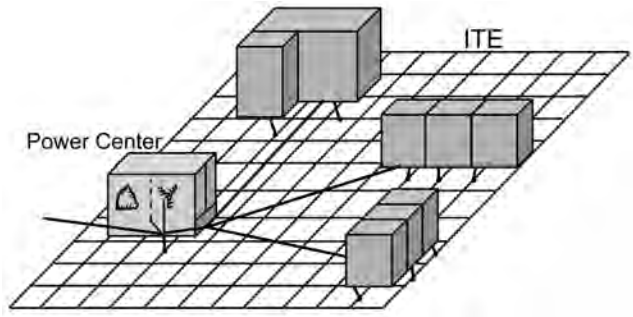

Figure 4-70—Recommended practice of a combined safety and SRG subsystem employing a plane or grid structure as permitted by the site's construction requirements

4.8.5.3.4 SRP at higher frequencies

At higher current frequencies, where wave-transmission line theory must be used to explain the action of the SRP, a slightly different view must be taken from the one given in 4.8.5.3.2. This mostly occurs due to the large circuit characteristics that the SRP now exhibits so the effects of path resonance within the SRP must be considered. In these cases it must be understood that for each current flow path within the SRP that appears as a quarter-wave (or odd multiple thereof) resonant path, there will also be a multitude of non-resonant or half-wave (or even multiple thereof) resonant parallel paths provided. These act to shunt the high-impedance path that a quarter-wave (or odd multiple thereof) may present between any two most direct points on the SRP. Hence, even when the effects of resonance within the SRP are allowed for, the overall impedance between any two points on the SRP may be significantly lower than one might otherwise expect.

The impedances presented by an SRP to any current in a frequency range where the SRP appears as a small circuit provide an infinite number of parallel paths for current flow in the plane. The combination of these paths results in very low current densities in any area on the plane. Low current densities throughout the plane imply equally low voltage drops throughout the plane.

Therefore, externally applied SRSs, with internally constructed equipotential ground plane structures (e.g., as provided at circuit-board level), provide the overall best approach to true equipotential signal-grounding means available. This is the typical case as when signal frequencies range from dc to several tens of megahertz, since the use of the combined approach ensures that minimal common-mode voltage variances exist among the connected signal circuits and interconnected equipment.

4.8.5.3.5 Signal reference grids

The SRG is closely related to the SRP in that, up until its waveguide beyond cutoff frequency is reached, it behaves almost exactly as does the SRP. The SRG may generally be thought of as being an SRP that has "holes" in its surface where the hole's perimeter conductor's dimensions describe the cutoff frequency above which the SRG quickly begins to lose its effectiveness in comparison to an SRP. The foregoing information and figures in this chapter on the SRP therefore generally apply to the SRG with the noted difference.

An everyday example of an SRG may typically be seen in the transparent window located in the front of most microwave ovens and where an SRG has been either imbedded or applied to the inner surface of the window's material. Here the SRG is being used as a shield, and the spacings between the grid elements have been chosen to be a small fraction of a wavelength to the microwave energy. This allows the grid to act as an effective barrier to its escape, but light is passed with little attenuation due to its much shorter wavelength.

Copyright © 2006 IEEE. All rights reserved.

The light is transmitted past the cutoff point, while the microwave energy "sees" the SRG in the window as almost the same thing as a solidly filled metal shield.

Practical SRG assemblies in facilities therefore have a limited upper frequency beyond which they do not function very well as compared to solid form SRP assemblies. However, the SRG is typically much more cost-effective and practical to install as a room- or facility-level means of signal reference grounding subsystem compared to a solid form SRP.

Typically, an SRG will be installed using a conductor intersection modulus of about 0.6 m · 0.6 m (2 ft · 2 ft). This is mostly because this is compatible with all of the standard U.S. cellular raised floor systems since they come with the same pedestal spacing and square floor tile dimensions. Larger SRP spacings are possible, but the upper frequency limit for such designs degrades rapidly as the spacing increases. The recommended spacing for an SRG is 0.6 m · 0.6 m (2 ft · 2 ft) since this is both compatible with standard cellular raised floor systems and as it provides a good, useful high-frequency performance. For example, such a modulus as recommended provides an effective band-pass range from dc to approximately 25 MHz to 30 MHz, and this is just what is necessary in almost all cases (see FIPS Pub 94, EPRI TR-102400-V2 [B14], and MIL-STD-188-124A [B47]). Larger modulus dimensions are therefore not generally recommended to be used except where installation conditions make the recommended dimension impractical, or where all of the associated equipment's OEMs have specific knowledge and experience that a larger modulus dimension will provide suitable operational characteristics.

Smaller modulus dimensions than recommended may be used to achieve better performance across the board. However, the use of a smaller modulus means that the SRG is not likely to be installed as a suspended SRG just below the level of the floor tile on a cellular raised floor system. This is avoided since an unworkable "fishnet" problem would be created for persons needing access to cables and other support equipment located beneath the floor. The use of smaller modulus SRG designs is, however, quite practical if they are installed directly atop the structural sub-flooring and piping and conduits, and similar items are then installed atop the SRG. Welded wire meshes and screens are one way in which this form of design becomes practical.

Practical examples of an SRG may be constructed using the metal bolt-in, horizontal support elements (e.g., "stringers") of a cellular raised floor. However, this is not as effective as an SRG that is built in-place using copper conductors and exothermically welded joints (bottom of Figure 4-71) or mechanical conductor clamps at the X-Y junctions (top of Figure 4-71) and where it is either laid directly upon the structural concrete sub-floor or is suspended by combination X-Y and U-bolt types of clamps to the pedestal posts of the cellular raised floor at a point just beneath the top-cap assemblies, all as shown in Figure 4-71.

The metallic composition of the removable floor tiles used with the cellular raised floor apparently has some practical effect on the overall performance of the assembly when they are closely coupled to the SRG elements comprising the 0.6 m · 0.6 m (2 ft · 2 ft) shorted turns. For example, these effects are most pronounced when the cellular raised floor's stringers themselves are used as the SRG, or where a made SRG is installed in suspended fashion just below the pedestal post's caps in a manner that permits close coupling between the floor tiles and the SRGs shorted-turn elements.

The effects of metal in the floor tile are reduced almost to nothing when the shorted-turn SRG elements are spaced away from the floor tile's undersurface, such as when the SRG is laid directly upon the structural concrete sub-floor and it is several tens of centimeters (a foot or so) or more in separation distance from the floor tiles. This is an exponential reduction in effect that is inversely related to spacing distance.

Metal-backed floor tiles and solid-cast back-plate floor tiles seem to react in about the same manner. In both cases, floor tiles with metal composition such as sheet-metal backing or cast back plates, primarily act as "Q-dampers" to the resonant LC circuit described by the closed loop of the SRGs perimeter conductors at each opening. This reduces undesirable "ringing" when these circuits are excited by an impinging current at or near their self-resonant frequency.

 Copyright © 2006 IEEE. All rights reserved.

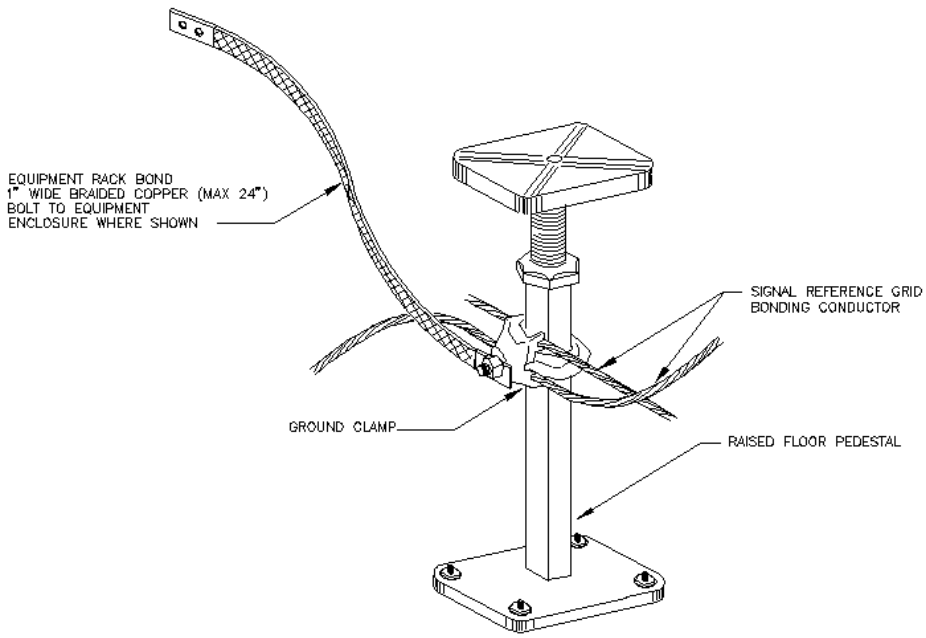

Figure 4-71—Typical cellular raised floor's pedestal post and with ground connections to/from it

4.8.5.3.6 Interconnection of multiple SRP and SRG levels

The concept of an SRP or SRG can be employed within a portion of a single equipment enclosure, among various interconnected equipment, or over an entire facility. In all cases, it is bonded to both the "local building ground" and to the grounding electrode conductor per the NEC. Large-scale, continuously constructed SRGs are also possible and can cover considerable area in a facility, as shown in Figure 4-72.

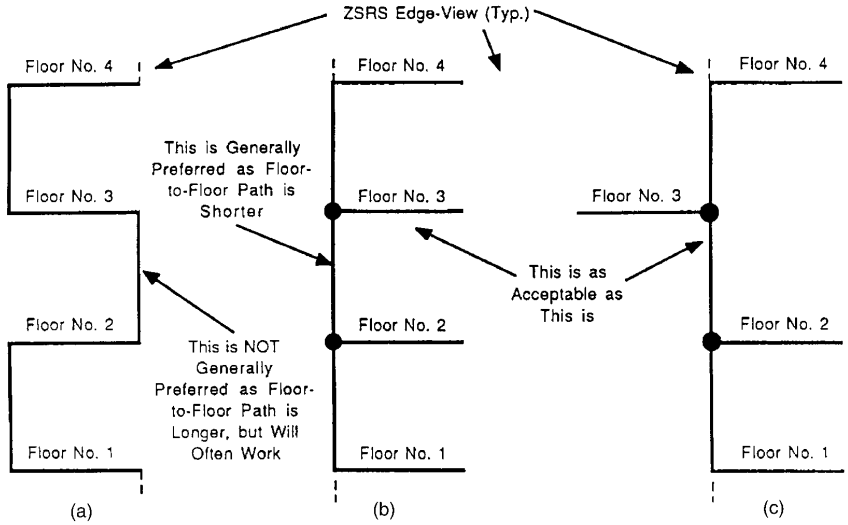

Figure 4-72—Edge view of several SRS installations that are continuous and routed between floors of a facility

NOTE—Type (a) is less desirable than the recommended methods shown in types (b) and (c).

Copyright © 2006 IEEE. All rights reserved.

Within equipment cabinets, all related components, signal return leads, backplanes, etc., must be connected via short [less than (1/20)λ of the highest frequency of concern] conductors to the equipment chassis that form the SRP or SRG. All similar equipment-level SRPs and SRGs should be connected to a room-level SRP or SRG via multiple (short) conductors and to the associated building electrical power system's grounding electrode conductor. The room-level SRP or SRG must, in turn, be connected to one or more building-level SRPs or SRGs via multiple (short) conductors. This process continues until the total amount of electrical and electronic equipment of interest is interconnected to one large continuous network of SRPs or SRGs (see MIL-HDBK-419 [B46]).

The interconnecting conductors between SRPs and SRGs are preferred to be multiple and have thin, wide cross sections to minimize their impedance at higher frequencies (e.g., use straps not round wires). This arrangement extends dc and low-frequency benefits to large areas of the facility in which it is used, but only the individual contiguous SRP or SRG areas possess full broadband grounding capability extending into the high-frequency range of 25 MHz to 30 MHz.

With a sufficient number of interconnections of small circuit dimensions installed between two separate SRP or SRG areas, the end result may approach that of a contiguous SRP or SRG. For example, the most practical location for such a construction often occurs when one SRP or SRG is installed directly above or below the other on different floors of the same building.

4.8.5.3.7 Signal reference structure as a spatial capacitor

At the point above which circuit analysis can be used to describe the action of the typical SRP or SRG, wave-transmission line theory must be used to explain its function. This also implies that the SRGs surge impedance (Z_O) is generally necessary to be considered as a part of the explanation. It also must be considered that the SRP or SRG acts as one-half of a large area and as an undefined value capacitor—with all other nearby metallic items acting as the opposing plate in the capacitor. The form of the SRG constructed in this fashion is a capacitor constructed in space, or that of a spatial capacitor. Another way to look at this is that the spatial capacitor acts as an extremely large area and physical size bypass capacitor to facility ground at each of the points where it is connected to something such as structural building steel, equipment ground, and earth grounding electrodes.

Taking the typical SRG as an example, if a surge current is injected into one point on the SRG, it does not matter to the surge current if the SRG is conductively connected into anything at all in order for the surge current to flow into and across the surface of the SRG. What the surge current's leading edge of the waveform is trying to do is to charge the spatial capacitor that the SRG represents to it. Since the leading edge of the surge current's waveform has not yet made much penetration into the area of the SRG, it does not "know" if there are any conductive exit ports from the SRG or not. It simply "sees" a given value of surge impedance at each junction of every ohms-per-square it encounters from the point on injection. The surface of the spatial capacitor then represents a continuing part of the original transmission line that is of changing dimensions, geometry, and impedance as the area involved increases. Hence, the surge waveform enters the SRG at the injection point and immediately encounters a junction, and also an impedance discontinuity in most cases, which forces a reflection of some current to occur. For current entering the junction, a division of the current occurs in inverse proportion to the specific Z_O presented by the junction that is now splitting the surge into two more paths. This action is repetitive at each junction and is highly beneficial. This action is repetitive at each junction and is highly beneficial from an EMI reduction standpoint, as discussed in the following paragraphs.

Since the energy level cannot be raised from that available in the original surge current's wavefront and its subsequent body, the splitting of the current at the first and subsequent junctions on the SRG forces a concurrent reduction in energy density as the wavefront progresses across the SRG. Thus, the net energy charge in the overall spatial capacitor remains near that of the original surge waveform's energy content, except for losses incurred due to the following:

 Copyright © 2006 IEEE. All rights reserved.

a) *IR* "heat" radiation losses
b) Far-field radiation losses
c) Impedance mismatches at junctions that cause reflected energy back into the transmission line
d) Near-field coupling losses into other conductors

The current, and therefore energy density at any given point on the surface of the SRG, is also progressively reduced as the surge current's wavefront and body move into it and through it as a traveling wave. This action also affects the surge voltage at the leading edge of the traveling wave in that it is progressively reduced along with the current. As less current moves through relatively constant impedance in the SRG, progressively smaller amounts of *IZ* drop are going to occur—thus the described actions continuously occur. The indicated losses also affect the frequency content of the surge current's traveling wave in that high-frequency components are diminished greatly over distance while low-frequency ones are not. This is highly beneficial from an EMI control standpoint.

Once additional points of connection to/from the SRG are reached by the traveling wave that is filling the SRG with energy, current is diverted from the SRG into these return paths and the net overall energy contained in the spatial capacitor is steadily diminished by that amount. This can be thought of as being equivalent to a resistive leakage current in a capacitor that is usually treated as a discrete component. As a result, the SRG acting as a spatial capacitor will not effectively hold charge over time. Anything that reduces higher frequency components, current density, and *di/dt* in a given path is very beneficial from an EMI control standpoint.

Note that while the SRG has a finite number of junctions of characteristic surge impedance Z_O, an SRP has an infinite number of junctions that can only be described on a per-square basis of area. Hence, the action of the SRP is always generally superior to that of the SRG.

Note also that an SPG or TREE design may be described as a somewhat lossy and linearly constructed transmission line equipped with a few junctions, with each of some differing Z_O and likely unwanted resonance characteristics. Also note that the conductor system used to construct the SPG or TREE design has very limited surface area as compared to an SRG and especially to an SRP. Hence, these designs do not perform as effective spatial capacitors and do not very effectively divide the surge current wavefront that can be propagated through the SPG or TREE conductor system as a traveling wave. This further explains the real limitations on these grounding methods in the higher frequency regime when they act as large circuits.

4.8.5.3.8 Attachment to earth electrode subsystem

SRSs that are externally applied to equipment in a room, etc., must be grounded per the NEC and NFPA 780. These connections are for safety and protection from lightning surge-related sideflashes. Since intense and destructive sideflashes are known to occur up to, and in excess of, 1.8 m (6 ft) horizontally, this is not a concern to be taken lightly.

Connection by short, robust grounding/bonding conductors between the SRS and any grounded metallic items that are within the above sideflash range is recommended practice. Such connections would typically mean multiple points of grounding/bonding being established between structural building steel, cold water piping, and grounded metal ducting systems, and any electrodes or their conductors that might be within sideflash range.

4.8.6 Lightning protection subsystem

The sole purpose of the lightning protection subsystem is the safe transport of lightning-related currents through the facility to the earth grounding electrode subsystem. This is accomplished by providing highly conductive paths to direct the lightning strike current to/from earth, while minimizing alternate paths via other items within the building. These conductors also form important waveguide paths for the ionized air in

Copyright © 2006 IEEE. All rights reserved.

the arc channel at higher frequency, but do not particularly control potentials over their paths at any frequency. This latter point is very important to take note of as it relates not to the conductor's cross-sectional area and related low amounts of dc resistance, but to the conductor's self-inductance and the $-e = L\, di/dt$ effects along its length.

The lightning protection subsystem is not required by code to present any particular value or range of impedances to the lightning current that may be impressed upon it. Neither the NEC, NFPA 75, nor NFPA 780 establishes impedance limits on the earth ground electrode subsystem associated with the lightning protection system. Instead of lower resistance connections to earth, these codes favor increased frequency of bonding of the lightning conductor system to other grounded conductors within the building. This approach results in a means of reducing dangerous sideflashes and the use of more (parallel) down-conductor paths throughout the building that are terminated to a buried ring ground.

4.9 Shielding concepts

The objective of both electromagnetic and electrostatic shielding is the significant reduction or elimination of the incidence of magnetic (or electric) fields from circuits. The basic approach is to interpose between the field source and the circuit a barrier of conducting material. Then, as changing field flux attempts to penetrate the barrier, it produces eddy currents in the barrier whose fields oppose the field of the inducing source or are reflected by the barrier. This allows the circuit to experience only the net field, which depending on the barrier material and geometry, can be considerably less than the source field (see Greenwood [B20]).

Closed-form analytical solutions for several geometries are possible (see Carter [B7]). Generally, it is necessary to solve the Laplace equation in the free space regions on either side of the barrier and the diffusion equation within the barrier material. These solutions are then matched at the boundaries. Several approximation techniques are also known (see Stratton [B56]). Specific shielding design considerations are presented in Chapter 8.

4.9.1 Electrostatic shielding

Electrostatic shielding consists of conductive barriers, metal enclosures, or metal conduits or cable coverings around circuits. The spatial electrostatic shield acts as a capacitive voltage divider between the field source and circuit, as shown in Figure 4-73. For a shield on a cable, the voltage divider action appears as shown in Figure 4-74. A low inductance means for connection of the shield to ground is required to facilitate the capacitive voltage divider effect.

Per Figure 4-73, it is seen that less capacitance between the shield and the inner conductor(s) is beneficial and that having a low impedance longitudinally along the run of the shield with a low-impedance termination to ground is most important. The shield's impedance is where the voltage will be built-up to ultimately be capacitively coupled between the shield and inner conductor, so this path must be of low impedance in relation to "ground" if the noise to be coupled is to be minimized.

In addition to electrostatic shielding as employed on cables, the interwinding Faraday shield installed in a shielded isolation transformer is an excellent example of the benefits of electrostatic shielding. Its operation is almost identical to that of the shield in the cable.

 Copyright © 2006 IEEE. All rights reserved.

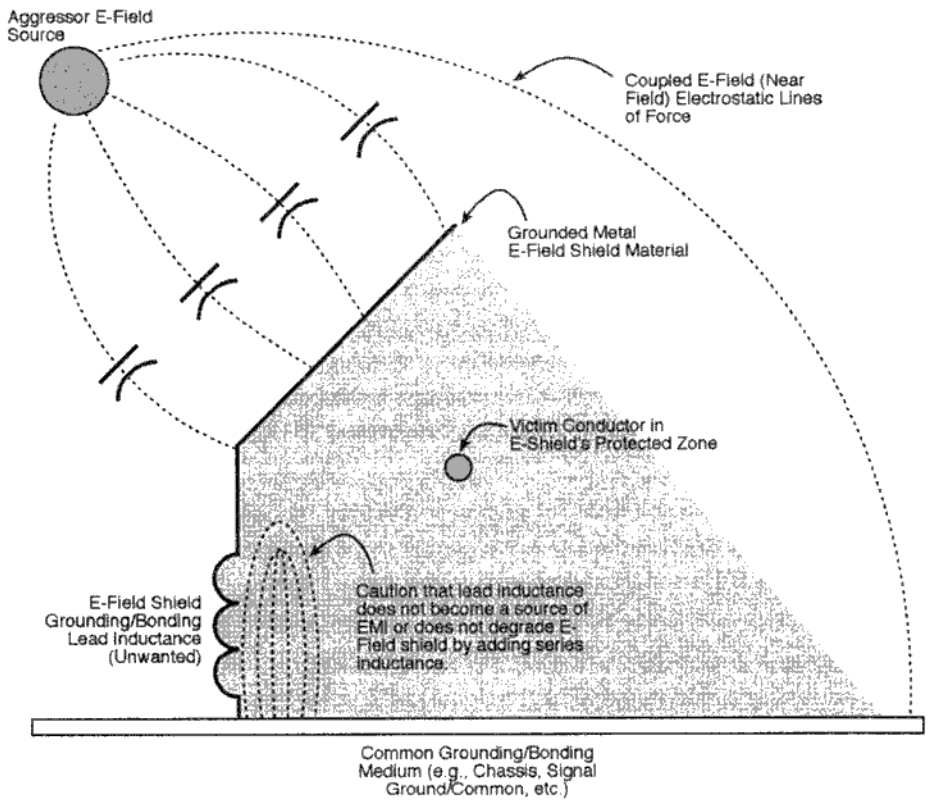

Figure 4-73—Electric field shielding using grounded metal to establish a voltage divider

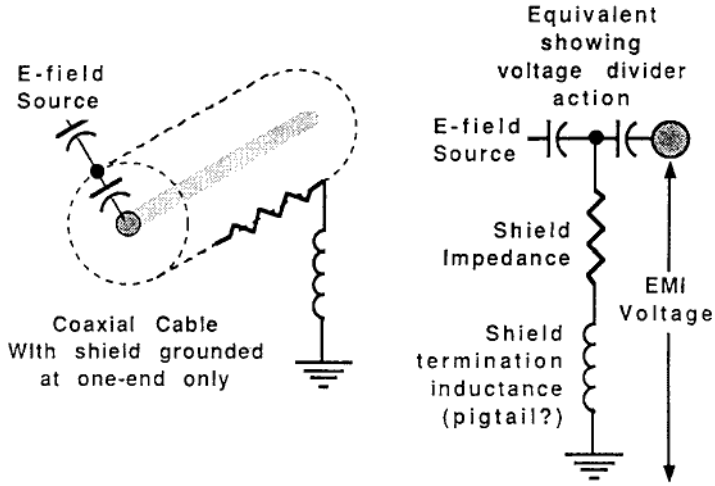

Figure 4-74—Capacitive voltage divider action in shield on a cable

In order to be effective, shields must be grounded via low-impedance paths at the frequencies of interest. Long grounding conductors and long (single-grounded) shields exhibit reduced effectiveness at high frequencies due to inductive reactance in the grounding conductor or shield (e.g., $+jX$ is randomly being placed in series with $-jX$). Therefore, very short grounding/bonding leads must be used, and they must be connected at the nearest equipment ground. Long shields need to be grounded at multiple locations along

Copyright © 2006 IEEE. All rights reserved.

their length. Cable shields must be either grounded at both ends or grounded at one end and grounded via an SPD at the opposite end.

4.9.2 Electromagnetic shielding for EMI

Effective electromagnetic shielding also consists of schemes such as high-frequency grounded conductive barriers, metal enclosures, metal conduits, and cable coverings around circuits. The objective of electromagnetic shielding is the minimization of magnetic flux coupling (mutual inductance) from an aggressor (e.g., power) source to the victim (e.g., control or signal) circuit. The following generalizations are also pertinent:

a) Physically separate the aggressor source from the victim circuit, minimizing the mutual inductance, and hence near-field EMI coupling, between them.

b) The enclosed area of the victim circuit can be reduced so as to reduce the number of near-field flux lines intercepted from the aggressor H-field EMI source.

c) Twisted pair conductors in the aggressor and victim circuits take advantage of the twisting wherein about half the stray magnetic flux couples into the circuit in each direction on the twisted pair, thus giving a small net flux coupling to be radiated from an aggressor EMI source or into a victim circuit.

d) Where twisting is not practical, such as with ac power conductors, close spacing of the conductors can be accomplished so that they appear as one conductor with equal and opposite currents, producing a minimally radiating H-field.

e) Enclose the signal conductors inside of a shield, and then ground the shield at both ends. This is a key concept for protection of the contained conductors from the H-field effects produced by nearby lightning and other surge currents.

4.9.2.1 Cable shields grounded at both ends

The “golden rule” of cable shielding requires that the shield on a cable only be grounded one time and at one end only. This rule has been established in order to prevent conductive “ground loops” from being established that would cause unwanted current to flow in a shield that is grounded at more than one place, e.g., at each end. The problem is that this is not a valid -rule- except sometimes when dealing with dc through low-frequency signals (particularly analog signals) and where the signal circuits are not connected in the differential mode (see Lewis [B37]).

Modern digital signal transport circuits that require EMI protection of the signal from near-field magnetic effects require that the shield be grounded at both ends in order that shield current be developed as a result of the near-field magnetic-related EMI. This shield current is then utilized to create a “bucking” current in the victim signal conductors, which will then attenuate the originally induced EMI. This is an important concept and is one that does not have any adverse effects on the cable shield’s ability to provide electrostatic shielding as discussed in 4.9.1.

What occurs then is that any EMI current induced in the shield by the original aggressor magnetic field EMI also produces a proportional magnetic field around the shield itself. This magnetic field is also an EMI-related field that causes a current flow in the contained victim signal conductors just as the original, externally applied EMI magnetic field does. The difference is that the EMI current induced into the victim signal conductors by the shield’s EMI magnetic field produces approximately a 180° phase shift from the externally caused EMI current in the victim conductors. Hence, the two EMI-induced currents are flowing in the common mode on the victim signal conductors and are in opposition to one another, thus producing the desired bucking effect.

Cable shields grounded at both ends can carry unwanted shield current such as that caused by potential difference between the two grounded ends of the shield. In general, these currents will be related to the power system’s fundamental and harmonic frequencies thereof.

 Copyright © 2006 IEEE. All rights reserved.

DC and low-frequency currents in the shield, as described in 4.9.2.1, can be eliminated or significantly attenuated by placing a blocking device between the shield and its ground connection point at one end. For example, a series-connected, back-to-back arranged stack of rectifier diodes can be used to establish a hold-off voltage due to the forward voltage drop across the diodes. If this hold-off voltage is slightly higher than that measured between the shield and its ground point, with the shield open at the measurement end, there will be no current flow in the shield until this voltage level is exceeded. For example, normal power system currents will not flow, but a lightning strike will cause a current flow, and the desired bucking current action can then ensue. The use of transient or surge-current-rated Zener diodes such as silicon avalanche diodes is generally a better approach than the use of typical rectifier diodes.

Another approach that is very practical, and is used by many telephone companies to break ground loops in the shield of the subscriber loop cable that is brought into the customer's premises, is to place an ac capacitor between the shield and the associated ground termination. This arrangement blocks dc completely, and due to the high reactance of the capacitor at low frequency, almost completely blocks power-system-related shield currents. Currents at high frequency, such as those produced by lightning, however, will "see" the capacitor as a very low ohmic value and will cause the desired shield current to flow in order to produce the bucking effects described.

Note that when a significant difference in frequency exists between the undesired shield current caused by potential difference at the cable's ends and the signal process being carried on the contained conductors, the shield's transfer impedance parameter becomes highly important. Simply put, the signal process in unlikely to be affected in this case even if unwanted shield current is observed to be flowing for whatever reason. This is the typical case with high-speed digital signal processes as are normally the case on modern designs.

4.9.2.2 Hazards associated with cable shields grounded at one end only

When a cable's shield is grounded at one end only, there must be an opposing end with the shield ungrounded, and such an ungrounded end represents a significant fire and shock safety hazard should the cable's shield become energized for whatever reason (see Lewis [B37]). Three common forms of energization are as follows:

a) Lightning

b) AC power system ground faults

c) Accidental contact of the shield at some point along its length with a conductor of another system of higher voltage

In any of these three cases, the shock hazard is readily apparent in that no one would wish to be in contact with the exposed end of an ungrounded shield and, for example, equipment or earth ground during the time of energization. The fire hazard is not as readily apparent since it generally requires that an arc be established between the cable shield's end and some nearby grounded item (such as the metal enclosure of the terminating equipment) and with some flammable material being nearby. However, if the ungrounded end of the shield is brought into the equipment, then there may be a number of combustible items that an arc can affect such as printed circuit boards (PCBs), air filters (with lint and dust in them), and other materials. In addition, even if a fire does not result in this case, the arc may cause serious damage to internal electronic circuits where it strikes or damage from the effects from the near fields surrounding it.

The NEC addresses the foregoing hazard by requiring that any cable's signal conductors and related shield be protected or grounded at the point where the cable passes from outside to inside of a building. This point of penetration is called the demarcation point. NEC requirements are that all of the signal conductors be equipped with a properly installed and rated SPD at the demarcation point. If the shield is to be brought into the building across the demarcation point, then the shield is required to be solidly grounded at this point or be equipped with its own SPD connected between the shield and ground.

Copyright © 2006 IEEE. All rights reserved.

4.10 Surge protective devices

4.10.1 Purpose and method of operation

An SPD is a device that is intended to limit transient overvoltages and divert surge currents. They are most commonly nonlinear shunt elements that divert the current derived from the overvoltage away from the downstream circuits. There are two types of protective devices protectors: clamping (clipping) and switching (crow bar). Up to the system maximum (rated) voltage, both types have a high resistance and so do not unduly load the distribution line. (In communications, the protector capacitance must also be taken into account.) Once the voltage exceeds a threshold level above the rated voltage, the nonlinearity characteristic of the device activates.

Clamping protectors draw a rapidly increasing current for an increasing voltage. Thus, voltage increases above the threshold are considerably attenuated. Figure 4-75 shows the operation of the clamping protector. The majority of the transient shown in gray would be prevented from reaching the protected load.

The major factors required for the SPD to perform the clamping are as follows:

a) The surge current capability of the SPD is high enough for the application.

b) The clamp voltage is high enough to avoid the SPD clipping the supply continuously.

c) The SPD should switch off once the surge has passed.

Switching protectors turn on to effectively "short out" the surge once a certain voltage level is exceeded. Gas discharge tubes (GDTs) and thyristor SPDs are examples of switching protectors. The major disadvantage of both is that the load can see an undervoltage condition while they are "on."

Gas tubes are inherently slow due to their mechanical nature. The tube requires time for the gas to light, and then for the tube to conduct to ground. For example, a one-nanosecond surge could hit 750 V before a 350 V tube could conduct to ground. However, the gas tube can handle far more current than most of the semiconductor-based SPD technology can.

Solid-state thyristor-based designs react fast, but since they are essentially back-to-back silicon-controlled rectifiers (SCRs), the voltage is clamped to near zero volts during the conduction, and there is very little at the load.

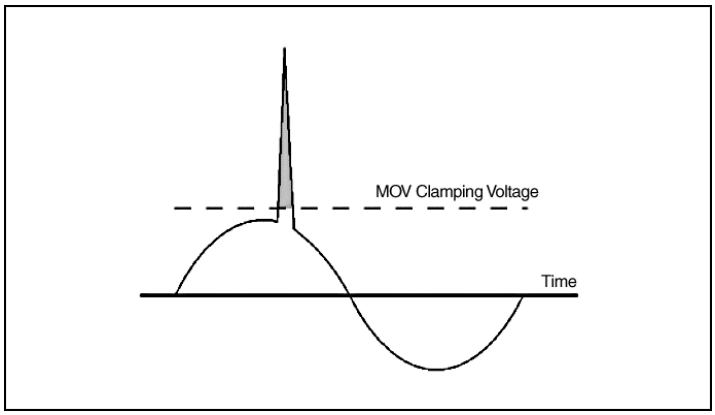

Figure 4-75—MOV clamping of ac power surge

 Copyright © 2006 IEEE. All rights reserved.

4.10.2 SPD technology

Surge protection technologies may involve (singly or in combination): silicone avalanche diode (SAD), MOV, air or carbon gap, GDT, Zener diode, surge relay, fuses, and circuit breakers. Regardless of the technology used, it is also important that there is some indication when a component of the surge suppressor has failed and is no longer protecting the load.

SAD: The silicon avalanche diode has a very tight voltage clamp characteristic, a very fast response speed, but very low energy (surge current) capability. Due to the short lead lengths possible in PCB applications, SADs ideally take advantage of their speed and voltage clamping characteristics. When used as the final stage in surge suppression, the low SAD surge current capability is not a problem. SADs will survive at the PCB level when downstream of more robust surge suppression.

MOV: Metal-oxide varistors provide an excellent compromise of voltage clamping, response time, and energy handling capability. Perhaps this is why MOVs are used in over 95% of hard-wired SPD designs either exclusively or in hybrid with other components. At the component level, an MOV will not clamp as low or as fast as an SAD. When these components are assembled into a SPD system, the difference between MOV and SAD performance is lost. This results from the impedance in the electrical connections between the component or group of components and the electrical distribution system. In actual SPD installations, there must be several inches or several feet of cable or bus bar as well as overcurrent protection separating the surge suppression components from the power line surge. Since overvoltage surges are of high frequency, the connection impedance acts to slow the response and raise the clamping of the connected suppression component. This results in a very similar system performance for both MOV and SAD hard-wired SPD. The high energy handling capability of MOVs, however, allows them much greater survivability in a power distribution system.

Many hard-wired SPD designs use several components connected together in parallel to achieve higher energy handling capability and lower surge impedance. Paralleling of components can be effective if done properly. There are many factors to consider, such as overcurrent protection, tolerance, uniformity of components, uniformity of lead length, and manufacturing quality control. The more components are used in parallel, the more these factors will add to or detract from anticipated performance.

Several independent papers have shown that SPDs incorporating large diameter block MOVs are to be preferred at service entrance locations over designs that use multiple smaller MOVs in parallel. Large diameter MOVs offer greater reliability and stability when subjected to a wide range of surge magnitudes and duration, because they do not have to try to divide the current equally between many circuits of slightly differing impedances. However, for some magnitudes of surges, a large number of smaller MOVs in parallel may have a lower let-through voltage.

Hybrid: Hybrid systems using both MOVs and SADs in parallel are perceived as having "the best of both worlds." This is not the case, as the characteristics of each component are different. As detailed previously, SADs have a tight voltage clamping characteristic and low surge current capability. MOVs have a high surge current capability, but the clamping voltage characteristic is not as tight. To effectively combine MOVs and SADs into a hybrid SPD that does not result in the SAD components being sacrificed at moderate levels of transient activity, circuitry must be utilized to transition transient current from the SADs to the MOVs.

It is possible to combine any surge component technology with another. High-voltage surge arresters have used MOVs with arc-gap type surge arresters, called *valve-regulated arresters*. Many products use MOVs in series with GDTs to limit the follow current. A hybrid SPD cannot be built by simply placing different components into a device. A hybrid SPD needs to be designed such that the surge components work in concert with each other to provide protection for equipment from the environment.

Copyright © 2006 IEEE. All rights reserved.

Air or carbon spark gaps: Air spark gaps are the earliest form of SPD developed to protect against lightning. They were generally connected between line and ground in locations where a high-voltage transient could cause significant equipment damage, such as the bushings of a high-voltage transformer. The protection level is a function of the gap distance, but is affected by environmental factors such as air humidity. They are inexpensive, but their insulation resistance can fall significantly after several operations and frequent replacement may be necessary.

Carbon spark gaps operate similarly to air gap protectors except that very high current levels can literally vaporize the carbon electrodes and then either reset to a much higher striking voltage or generate a fairly high resistance to earth. For modern SPDs, these components are not practical and generally not used.

GDTs: Gas discharge tubes seek to overcome some of the disadvantages of air or carbon spark gaps by hermetic sealing, thereby eliminating environmental effects. Gas filling enables spark discharge conditions to be quite rigorously controlled since the breakdown voltage of such a device is related to gas pressure and electrode separation for a particular set of materials. GDTs have been designed for both low- and high-voltage applications. Typically, low-voltage protection devices have electrode spacing of 1 mm (0.04 in) or so in an argon/hydrogen mixture sealed within a ceramic envelope at about 0.1 bar.

Devices are available with dc breakdown voltages from 90 V upwards and various current ratings, usually greater than 5 kA. With fast rise-time pulses, the breakdown voltage is higher than the nominal dc level due to the finite transit time of ionized particles between the electrodes. For instance, a typical tube rated at 200 V dc breakdown will strike at 900 V or so with 1 kV/µs rise-time pulse injection. Generally, the striking voltage varies with the square root of dV/dt, and the tube will generally strike within 0.5 µs.

Once fired, current flows between the tube electrodes, and for currents up to 1 A, the tube is said to be in the "glow" region with a tube voltage of 75 V to 150 V. Over 1 A, the discharge changes to a true ionized plasma arc and the current flowing can be many thousands of amps for only 10 V to 30 V across the tube, assuming that the surge source is capable of supplying such currents. As the surge dies away, the current decreases and the tube returns to the glow region, and then to the nonconducting state. It is possible that a high capacity dc supply may cause the tube to "hold on" by continuously supplying current. In practice, the output impedance of the power supply and any line impedance will limit the current to a level that will cause the tube to reset. Where a very high current supply is being used to supply multiple circuits and the resistance is low, then each circuit should be separately fused to prevent common-mode failure of all circuits.

Two and three electrode tubes are available, the latter being used to protect a two-wire floating system. See Figure 4-76. If two 2-electrode GDTs are used to protect a two-wire signal system, one GDT is likely to fire before the other. During the short time interval when only one of the tubes has fired, one wire is close to ground potential and the other is at a high voltage, which can produce equipment damage. The use of hybrid circuits remedies this problem.

A three-electrode tube is superior for protecting two-wire cables. As one electrode conducts, all the gas in the tube becomes ionized and all electrodes are connected to earth. There is only one time delay before conduction begins and the later surge on wire 2 is diverted directly to earth without any additional time delay, thus preventing the surge current flowing through the protected equipment.

One problem associated with GDTs is eventual "burn-up" if significant continuous power is applied accidentally or is present on the line. For this reason, GDTs are restricted to low-power ac or dc circuits. Voltage overshoot can also be a problem since arc formation, as noted earlier, takes a significant time relative to the surge rise time. For instance, a 150 V GDT will strike at 150 V (20%) under slow rising voltage conditions, but may let through up to 500 V or even 700 V before striking under typical 1 kV/s rise-time impulses.

 Copyright © 2006 IEEE. All rights reserved.

When GDTs are used on ac power lines, care must be taken to ensure that there is sufficient overcurrent protection or a current-limiting device must be placed in series. During a transient the GDT will fire, resulting in a relative short circuit between the two terminals. In an ac circuit, this short circuit will be maintained until the surge current decreases sufficiently for the GDT to turn off. To prevent excessive current that would destroy the GDT, a MOV or an overcurrent device can be placed in series.

GDTs are generally considered to have a finite life of approximately 20 years as a consequence of deterioration in the tubes partial vacuum.

Multi-stage SPDs: It is generally necessary to use more than one type of component in a protective network to obtain the best possible combination of desirable characteristics. A common combination incorporates a high-current relatively slow-acting component with a faster acting but lower power rated component in such a way as to minimize voltage and current output. The design of such a circuit should also take into account the possible consequences of surges below the operating point of the high power component but above levels at which the lower power device can be damaged.

The use of multiple SPD throughout the electrical distribution system is also a common practice. More information on this is available in Chapter 8 and Chapter 9.

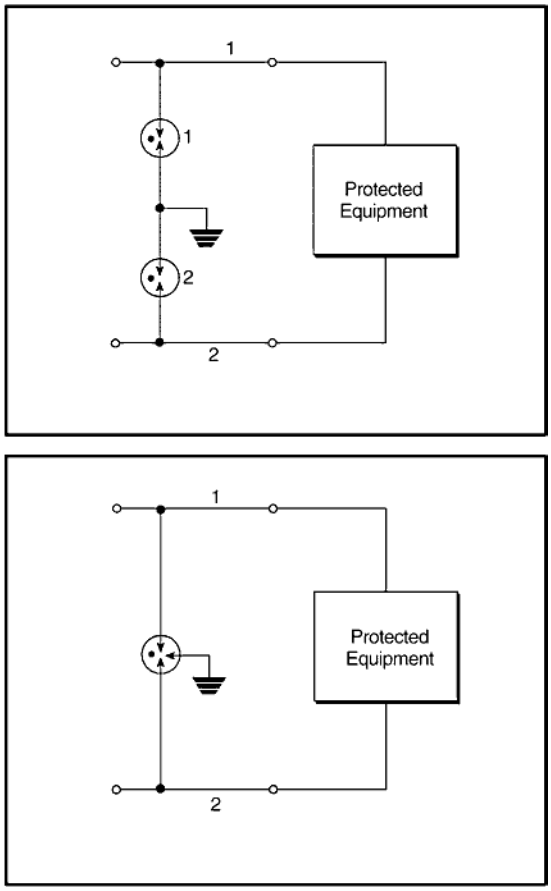

Figure 4-76—Two and three electrode GDT SPDs

Copyright © 2006 IEEE. All rights reserved.

4.11 Normative references

The following referenced documents are indispensable for the application of this recommended practice. For dated references, only the edition cited applies. For undated references, the latest edition of the referenced document (including any amendments or corrigenda) applies.

ANSI C84.1, American National Standard for Electric Power Systems and Equipment—Voltage Ratings (60 Hz).[10]

FIPS Pub 94, Guideline on Electrical Power for ADP Installation.[11]

IEEE Std 142, IEEE Recommended Practice for Grounding of Industrial and Commercial Power Systems *(IEEE Green Book*).[12, 13]

IEEE Std 446, IEEE Recommended Practice for Emergency and Standby Power Systems for Industrial and Commercial Applications *(IEEE Orange Book).*

IEEE Std C57.12.00, IEEE Standard General Requirements for Liquid-Immersed Distribution, Power, and Regulating Transformers.

IEEE Std C57.12.01, IEEE Standard General Requirements for Dry-Type Distribution and Power Transformers Including those with Solid Cast and/or Resin Encapsulated Windings.

IEEE Std C62.41, IEEE Recommended Practice on Surge Voltages in Low-Voltage AC Power Circuits.

NFPA 70, 2005 Edition, National Electrical Code® (NEC®).[14]

NFPA 75, Standard for the Protection of Electronic Computer/Data Processing Equipment.[15]

NFPA 77, Recommended Practice on Static Electricity.

NFPA 780, Standard for the Installation of Lightning Protection Systems.

4.12 Bibliography

[B1] Allen, G. W., and Segall, D., "Monitoring of Computer Installations for Power Line Disturbances," *IEEE Winter Power Meeting Conference,* WINPWR C74 199-6, 1974 (abstract in *IEEE Transactions on PAS,* vol. PAS-93, p. 1023, July/Aug. 1974).

[B2] ANSI C63.4-2003, American National Standard for Methods of Measurement of Radio-Noise Emissions from Low-Voltage Electrical and Electronic Equipment in the Range of 9 kHz to 40 GHz.

[10]ANSI publications are available from the Sales Department, American National Standards Institute, 25 West 43rd Street, 4th Floor, New York, NY 10036, USA (http://www.ansi.org/).

[11]FIPS Pub 94-1983 has been withdrawn; however, copies can be obtained from Global Engineering, 15 Inverness Way East, Englewood, CO 80112-5704, USA, tel. (303) 792-2181 (http://global.ihs.com/).

[12]IEEE publications are available from the Institute of Electrical and Electronics Engineers, Inc., 445 Hoes Lane, Piscataway, NJ 08854, USA (http://standards.ieee.org/).

[13]The IEEE standards or products referred to in this subclause are trademarks of the Institute of Electrical and Electronics Engineers, Inc.

[14]The NEC is published by the National Fire Protection Association, Batterymarch Park, Quincy, MA 02269, USA (http://www.nfpa.org). Copies are also available from the Institute of Electrical and Electronics Engineers, Inc., 445 Hoes Lane, Piscataway, NJ 08854, USA (http://standards.ieee.org/).

[15]NFPA publications are available from Publications Sales, National Fire Protection Association, 1 Batterymarch Park, P.O. Box 9101, Quincy, MA 02269-9101, USA (http://www.nfpa.org/).

 Copyright © 2006 IEEE. All rights reserved.

[B3] Arrillaga, J. et al., *Power System Harmonics.* New York: John Wiley & Sons, 1985.

[B4] Blake, L. V., *Antennas.* New York: John Wiley & Sons, 1966.

[B5] Boxleitner, W., *Electrostatic Discharge and Electronic Equipment.* New York: IEEE Press, 1989.

[B6] Boyce, C. F., Ch. 25: "Protection of Telecommunications Systems," vol. 2, "Lightning," in *Lightning Protection,* R.H. Golde (ed). London: Academic Press, 1977.

[B7] Carter, G. W., *The Electromagnetic Field in its Engineering Aspects.* London, New York, and Toronto: Longmans, Green and Co., 1954.

[B8] Cianos, N., and Pierce, E., "A Ground-Lightning Environment for Engineering Usage," Stanford Research Institute Project No. 1834, McDonald Douglas Astronautics Co., Contract No. L.S. 2817-A3, Aug. 1972.

[B9] Crepaz, S., "Eddy Current Losses in Rectifier Transformers," *IEEE Transactions on Power Apparatus and Systems,* vol. PAS-89, no. 7, pp. 156–165, Sept./Oct. 1970.

[B10] Denny, Hugh W., "Grounding for the Control of EMI." Don White Consultants, Inc., Gainesville, VA.

[B11] Edison Electric Institute, *Power Indices,* ASAI (Average Service Availability Index), Washington, DC.

[B12] Emanuel, A. E., and Wang, X., "Estimation of Loss of Life of Power Transformers Supplying Nonlinear Loads," *IEEE Transactions on Power Apparatus and Systems,* vol. PAS-104, no. 3, Mar. 1985.

[B13] EPRI PQTN Brief No. 33, *Shared Neutral Current in Branch Circuits Serving Office Equipment,* EPRI PEAC, Knoxville, TN, Feb. 1996.

[B14] EPRI TR-102400-V2, *EPRI: Handbook for Electromagnetic Compatibility of Digital Equipment in Power Plants, vol. 2: Implementation Guide for EMI Control,* Project 3406-07, Final Report, Oct. 1994.

[B15] Gallace, L., and Pujol, H., "The Evaluation of CMOS Static-Charge Protection Networks and Failure Mechanisms Associated With Overstress Conditions as Related to Device Life," *Reliability Physics Symposium Proceedings,* April 1977.

[B16] Golde, R. H., Ch 17: "The Lightning Conductor," vol. 2, "Lightning," in *Lightning Protection,* R. H. Golde (ed.). London: Academic Press, 1977.

[B17] Goldstein, M., and Speranza, P. D., "The Quality of U.S. Commercial AC Power," *IEEE International Telecommunications Energy Conference (INTELEC),* pp. 28–33 (CH 1818-4), 1982.

[B18] Goedbloed, Japer J., *Electromagnetic Compatibility.* Prentice Hall International, 1992, pp. 22–25.

[B19] Greason, W. D., *Electrostatic Damage in Electronics: Devices and Systems.* New York: John Wiley and Sons, 1987.

[B20] Greenwood, A., *Electrical Transients in Power Systems,* 2nd edition. New York: John Wiley and Sons, 1991.

[B21] Gruzs, T. M., "A Survey of Neutral Currents in Three-Phase Computer Power Systems," *IEEE Transactions on Industry Applications,* vol. IA-26, no. 4, July 1990.

Copyright © 2006 IEEE. All rights reserved.

[B22] Hayt, W.H. Jr. and Kemmerly, J.E., *Engineering Circuit Analysis.* New York: McGraw-Hill Book Company, 1962.

[B23] Hwang, M. S., Grady, W. M., and Sanders Jr., H. W., "Assessment of Winding Losses in Transformers Due to Harmonic Currents," Proceedings, *IEEE International Conference on Harmonics in Power Systems,* Worcestor Polytechnic Institute, pp. 119–124, Oct. 1984.

[B24] IEC 60555-1:1982, Disturbances in Supply Systems Caused by Household Appliances and Similar Electrical Equipment—Part 1: Definitions.[16]

[B25] IEC 61000-3-2:2005, Electromagnetic Compatibility (EMC) Part 3-2: Limits—Limits for Harmonic Current Emissions (Equipment Input Current Less than or Equal to 16 A Per Phase).

[B26] IEC 61000-3-3:2005, Electromagnetic Compatibility (EMC) Part 3-3: Limits—Limitation of Voltage Changes, Voltage Fluctuations, and Flicker in Public Low-voltage Supply Systems, for Equipment with Rated Current Less than or Equal to 16 A Per Phase.

[B27] IEC 60801-4:1988, Electromagnetic Compatibility for Industrial-Process Measurement and Control Equipment—Part 4: Electrical Fast Transient/Burst Requirements.

[B28] IEEE Power Systems Harmonics Working Group Report, Bibliography of Power System Harmonics, Parts I & II, *IEEE Transactions on Power Apparatus and Systems,* vol. PAS- 103, no. 9, Sept. 1984.

[B29] IEEE Std 141-1993, IEEE Recommended Practice for Electric Power Distribution for Industrial Plants *(IEEE Red Book).*

[B30] IEEE Std 519-1992, IEEE Recommended Practices and Requirements for Harmonic Control in Electric Power Systems.

[B31] IEEE Std 1366-2003, IEEE Guide for Electric Power Distribution Reliability Indices.

[B32] IEEE Std C57.110-1998, IEEE Recommended Practice for Establishing Transformer Capability When Supplying Nonsinusoidal Load Currents.

[B33] Keeling, M., "Evaluation and Design Reference Guide for the Grounding, Bonding, Shielding, and Surge Suppression of Remote Computer Systems," USDA Forest Service, 1987.

[B34] Key, T. S., "Diagnosing Power Quality Related Computer Problems," *IEEE Transactions on Industry Applications,* vol. IA-15, No. 4, July/Aug. 1979.

[B35] Kosow, Dr. Irving L., *Electric Machinery and Transformers.* Englewood Cliffs, NJ: Prentice-Hall, Inc.

[B36] Lee, K. S., *EMP Interaction: Principles, Techniques, and Reference Data.* New York: Hemisphere Publishing Corporation, 1986.

[B37] Lewis, Warren H., "Effective Computer Installations Require System Noise Protection," *Computer Technology Review,* Fall 1984.

[16]IEC publications are available from the Sales Department of the International Electrotechnical Commission, Case Postale 131, 3, rue de Varembé, CH-1211, Genève 20, Switzerland/Suisse (http://www.iec.ch/). IEC publications are also available in the United States from the Sales Department, American National Standards Institute, 25 West 43rd Street, 4th Floor, New York, NY 10036, USA (http://www.ansi.org/).

 Copyright © 2006 IEEE. All rights reserved.

[B38] Lewis, Warren H., "Testing Isolation Transformers for Attenuation," *Electrical Construction & Maintenance Magazine,* Dec. 1995.

[B39] Martzloff, F. D., "Coupling, Propagation, and Side Effects of Surges in an industrial Building Wiring System," *IEEE Transactions on Industry Applications,* vol. IA-26, no. 2, pp. 193–203, March/April 1990.

[B40] Martzloff, F. D., "Metal-Oxide Varistor Versus Environment: Winning the Rematch," *IEEE Transactions on Power Delivery,* vol. PWRD-1, no. 2, pp. 59–66, April 1986.

[B41] Martzloff, F. D., and Gruzs, T. M., "Power Quality Surveys: Facts, Fictions, and Fallacies," *IEEE Transactions on Industry Applications,* vol. 24, no. 6, pp. 1005–1018, Nov./Dec. 1988.

[B42] Martzloff, F. D., and Leedy, T. F., "Electrical Fast-Transient Tests: Applications and Limitations," *IEEE Transactions on Industry Applications,* vol. IA-26, no. 1, pp. 151–159, Jan./Feb. 1990.

[B43] McCann, G. D., "The Measurement of Lightning Currents in Direct Strokes," *AIEE Transactions,* vol. 63, pp. 1157-64, 1944.

[B44] McEachern, A., *Handbook of Power Signatures.* Foster City, CA: Basic Measuring Instruments, 1989.

[B45] *McGraw-Hill Concise Encyclopedia of Science and Technology.* New York: McGraw-Hill Book Company, 1984.

[B46] MIL-HDBK-419, Grounding, Bonding, and Shielding for Electronic Equipments and Facilities, vol. 1 (Basic Theory), vol. 2 (Applications).

[B47] MIL-STD-188-124A, Grounding, Bonding, and Shielding for Common Long Haul Tactical Communications Systems Including Ground Based Communications—Electronics Facilities and Equipments.

[B48] Nordgard, J. D., and Chen, C. L., "FAA Lightning Protection Study: Lighting Induced Surges on Buried Shielded Transmission Lines; Numerical Analysis and Results," FAA Report No. FAA-RD-77-83, *FAA-Georgia Institute of Technology Workshop on Grounding and Lightning Technology,* May 1977.

[B49] Ott, Henry W., *Noise Reduction Techniques in Electronic Systems.* New York: Wylie-Interscience Publications, 1976.

[B50] *Radio Engineers Handbook.* New York: McGraw-Hill.

[B51] Rudenberg, R., *Transient Performances of Electrical Power Systems.* Boston, MA: MIT Press, 1970.

[B52] Schuerger, Robert J., *Harmonics and Power Quality.* Electro-Test Inc. Learning Center.

[B53] Skilling, H. H., *Electrical Engineering Circuits.* New York: John Wiley & Sons, 1965.

[B54] Standler, Ronald B., "Calculation of Energy in Transient Overvoltages," *IEEE National Symposium on Electromagnetic Compatibility,* pp. 217–222, 1989.

[B55] Standler, Ronald B., *Protection of Electronic Circuits for Overvoltages.* New York: Wiley-Interscience, 1989, p. 434, and republished by Dover Publications, Mineola, NY, 2002.

[B56] Stratton, J. A., *Electromagnetic Theory.* New York: McGraw-Hill, 1941.

Copyright © 2006 IEEE. All rights reserved.

[B57] Sunde, E. D., *Earth Conduction Effects on Transmission Systems.* Van Nostrand Company, 1949, and Dover Publications, 1968.

[B58] Sunde, E. D., "Lightning Protection for Buried Toll Cable," *Bell System Technical Journal,* no. 24, April 1945.

[B59] TCI Trans-Coil, Inc., Technical Bulletin KLCCAT, Nov. 1, 1995.

[B60] *The Dranetz Field Handbook for Power Quality Analysis.* Edison, NJ: Dranetz Technologies, Inc., 1991.

[B61] *The IAEI Soares Book on Grounding,* 4th edition. International Association of Electrical Inspectors, 1990.

[B62] UL 1449-1996, Transient Voltage Surge Suppressors.[17]

[B63] UL 1561-1999, Dry-Type General Purpose and Power Transformers.

[B64] UL 1562-1999, Transformers, Distribution, Dry-Type—Over 600 Volts.

[B65] Underwriters Laboratories Inc., *Electrical Construction Materials Directory*, June 1991.

[B66] Van Keuren, E., "Effects of EMP Induced Transients on Integrated Circuits," *IEEE Symposium on Electromagnetic Compatibility,* pp. 1–5, 1975.

[B67] von Jouanne et al., "Filtering Techniques to Minimize the Effect of Long Motor Leads on PWM Inverter-Fed AC Motor Drive Systems," *IEEE Transaction on Industry Applications,* vol. 32, no. 4, pp. 919–926, July/Aug. 1996.

[B68] Vorgucic, A. D., "Condition of Evaluation of the Protection Zone of the Lightning Rod," FAA Report No. FAA-RD-78-83, *FAA-Georgia Institute of Technology Workshop on Grounding and Lightning Technology,* 1978,

[B69] Waters, W., *Electrical Induction From Distant Current Surges.* Englewood Cliffs, NJ: Prentice-Hall, Inc. 1983.

[17] UL publications are available from http://www.ul.com/

 Copyright © 2006 IEEE. All rights reserved.

Chapter 5
Instrumentation

5.1 Introduction

Power quality site surveys and longer term monitoring programs both require proper instrumentation in order to be effective. A wide variety of measuring equipment is available to support the investigator. The challenge is in selecting the most appropriate instrumentation for a given test or measurement (see Clemmensen [B4]).[1]

The intent of this chapter is to provide the reader with an overview of the available tools that may be used to perform a power quality site survey. Emphasis is placed on the fact that most building electrical systems support utilization equipment that does not draw sinusoidal current, which contributes to distortion of the voltage sine wave; therefore, true root-mean-square (rms) instrumentation should be used to measure these voltages and currents. This issue will be discussed in more detail in 5.5.

The chapter is subdivided into four main subclauses.

— 5.2 lists the range of instrumentation available to perform the various levels of a power quality survey.

— 5.3 describes the range of methods and hardware used to measure voltages and currents.

— 5.4 describes each measuring device and its use during the site survey.

— 5.5 describes factors related to measurement accuracy and the limitations that can be encountered when incorrect instruments are selected for voltage or current measurements.

5.2 Range of available instrumentation

Chapter 6 describes the recommended practice for conducting measurements with the appropriate instruments during various levels of a site survey based on the following steps:

a) Determine the soundness of the power distribution (wiring) and grounding system supplying the equipment.

b) Determine the quality of the ac voltage supplying the equipment.

c) Determine the sources and impact of power system disturbances on equipment performance.

d) Analyze the survey data to identify cost-effective improvements or corrections, both immediate and in the future.

Recommended instruments required to implement these steps are shown in Table 5-1. These instruments are discussed further in 5.5.

5.3 Voltage and current measurements

The tools used to analyze components of power flow rely on accurate information gathered from either voltage or current measurements, and in many cases, both. As previously stated, recommended practice is to use true rms metering equipment when conducting the site survey because algorithms used for computing power flow parameters such as harmonic distortion, power factor, efficiency, etc., rely on the accuracy of the sampled voltages and currents. This subclause describes the various techniques and hardware used to obtain correct measurements of voltages and currents. Emphasis is on the techniques that lend themselves to ease of use when conducting the site survey.

---

[1]The numbers in brackets correspond to those of the bibliography in 5.7.

Copyright © 2006 IEEE. All rights reserved.

Table 5-1—Recommended test instruments for conducting a site survey

Instrument	Minimum required instrumentation				Multiple function or special purpose instrumentation			
	True rms multi-meter	**True rms clamp-on am-meter**	**Ground impe-dance tester**	**Earth ground tester**	**Oscillo-scope with current trans-ducer**	**Oscillo-scope with line de-coupler**	**Power line monitor**	**Spec-trum analyzer**
Measurement	**Voltage conti-nuity**	**Current**	**Impe-dance**	**Resist-ance impe-dance**	**Current wave-forms**	**Voltage wave-forms**	**Voltage current har-monics**	**Har-monics noise spectra**
Neutral-ground bond (1) Grounding electrode conductor connections	√[a]					√	√	
(2) Main bonding jumper connections	√[a]					√	√	
(3) Extraneous bonds downstream from service entrance and/or separately derived secondary bond	√	√			√	√	√	
Neutral conductor sizing, routing (1) Parity or greater than phase conductor neutral sizing		√			√		√	
(2) Shared (daisy-chained) neutrals		√			√		√	
Equipment grounding system (1) Equipment grounding conductor (EGC) impedance			√					
(2) EGC integrity when used with supplementary grounding electrodes	√							
Dedicated feeders, direct path routing (1) Other equipment on the circuit of interest		√			√		√	
(2) EGC impedance			√					
(3) Mixed grounding means problems		√			√		√	
Grounding electrode impedance (1) Resistance of the grounding electrode				√				
(2) Grounding electrode conductor integrity		√						

 Copyright © 2006 IEEE. All rights reserved.

Table 5-1—Recommended test instruments for conducting a site survey *(continued)*

Instrument	Minimum required instrumentation				Multiple function or special purpose instrumentation			
	True rms multi-meter	**True rms clamp-on am-meter**	**Ground impe-dance tester**	**Earth ground tester**	**Oscillo-scope with current trans-ducer**	**Oscillo-scope with line de-coupler**	**Power line monitor**	**Spec-trum analyzer**
Measurement	**Voltage conti-nuity**	**Current**	**Impe-dance**	**Resist-ance impe-dance**	**Current wave-forms**	**Voltage wave-forms**	**Voltage current har-monics**	**Har-monics noise spectra**
Conduit/enclosure ground continuity (1) Metallic enclosure, conduit, raceway, panelboard continuity	√		√			√	√	
(2) Bonding jumpers where nonmetallic conduit is used	√		√			√	√	
(3) Continuity of expan-sion joints telescoping raceway and wire molds	√		√			√	√	
Separately derived system grounding (1) Verify neutral as sepa-rately derived and not interconnected	√		√					
(2) Impedance of neutral-ground bond on secondary			√			√	√	
(3) Grounding electrode conductor connections			√			√	√	
Insulated ground (IG) systems (1) Conductor insulation from conduit ground systems	√							
Power line variations (1) Undervoltages or overvoltages	√					√	√	
(2) Momentary sags and swells						√	√	
(3) Subcycle transient events						√	√	√
(4) Voltage notching						√	√	
(5) Voltage interruptions						√	√	
(6) Electrical noise						√	√	√
(8) Harmonics (voltage and current)							√	√
(9) Frequency variations							√	√

[a]Microohm meter.

Copyright © 2006 IEEE. All rights reserved.

5.3.1 Voltage measurements

AC meters are designed to measure the "effective value" of the ac voltage (or current) in delivering energy to the load, so that 1 W of ac voltage and current produces exactly the same amount of heat as 1 W of dc voltage and current. Mathematically this effective value is found by taking the square root of the mean of the sum of the squared values for the fundamental and harmonic voltage and current samples of interest, and hence the name *rms.*

Before the advent of digital electronics, ac meters had magnetic movements with a needle attached to them. The most common was the D'Arsonval meter in which the meter movement responded to the average of a rectified sine wave. A scale was placed on the face of the meter with a "form factor" built in to convert the reading to an equivalent rms value. Note that the meter actually measures the average of the rectified wave, and the form factor converts it to rms based on the assumption that the waveform is sinusoidal.

Early digital meters (and low-cost ones today) utilize this same method of either averaging a rectified wave or measuring the peak of the wave and multiplying the result by a scaling factor to obtain the equivalent rms. As with the analog meter movement, the rms value obtained is correct only when the measured wave shape is sinusoidal. To address the issue of nonsinusoidal wave shapes, "true rms" meters have come into widespread use. These true rms meters will accurately measure the rms value, regardless of the wave shape.

5.3.1.1 True rms voltmeters

True rms reading voltmeters indicate the square root of the sum of the squares of all instantaneous values of the cyclical voltage waveform. A variety of true rms voltmeters are in use, including the thermocouple type, square-law type, and sampling type. These meters will indicate the correct or true rms value for every type of wave shape from sinusoidal waves to pure square waves and are therefore the preferred voltage-measuring instrument for the site survey.

5.3.1.1.1 Thermocouple type

The rms value of a voltage is defined in terms of the heat it will produce in a resistive load. Thus, a natural way to measure true rms voltage is by means of a thermocouple device, which includes a heating element and a thermocouple in an evacuated chamber. The heating element produces heat in proportion to the rms voltage across it, and the thermocouple produces a dc voltage in proportion to the generated heat. Since thermocouples are affected by inherent nonlinearities and by environmental temperature, a second thermocouple is typically added in a feedback loop to cancel these effects and produce a workable rms-responding voltmeter. The major drawback to this type of measurement is the time it takes for the temperature of the measuring element to stabilize.

5.3.1.1.2 Square-law type

This voltmeter uses the nonlinear characteristics of a P-N junction to produce an analog squaring circuit. From this, the rms voltage is calculated as the square root of the mean of the squared values.

5.3.1.1.3 Sampling devices

The ac voltage is sampled at relatively high rates; the sampled values are squared and then averaged over one or more complete ac cycles. The square root of the result is then displayed as the true rms value. This technique lends itself nicely to digital manipulation without the drifting overtime and temperature inherent in analog square-law devices.

 Copyright © 2006 IEEE. All rights reserved.

5.3.1.2 Average responding rms voltmeters

All rms meters are calibrated to read in rms units. AC voltmeters that respond to average, peak, or rms values are commonplace. Typical analog voltmeters are an "average actuated, rms calibrated" device. The assumption is that the measured wave is sinusoidal and that the ratio between the rms and average values is always a constant. A multiplier called the *form factor* is used to convert the averaged value to the equivalent rms value. The 1.1 multiplier used by these instruments is based on the assumption that the waveform is sinusoidal and that the rms value of a sine wave is 1.1 times the average value of the same rectified sine wave.

5.3.1.3 Peak responding voltmeters

AC voltmeters that respond to the peak value of the waveform are also calibrated to display an rms value. The peak value of the waveform is detected and a multiplier is used to convert the peak value to the equivalent rms value. Like the average responding circuit, the waveform must be sinusoidal or the displayed value will be erroneous.

5.3.2 Current measurements

AC current measurements are slightly more difficult to perform during a site survey compared to voltage measurements, but there are many instruments available to simplify the process. This subclause will focus on the techniques and hardware used in conjunction with a metering device to obtain current readings. As with voltage measurements, recommended practice is to use true-rms-reading meters when performing a site survey because of the nonlinear nature of the electronic loads likely to be encountered. True rms ammeters include two types of indirect reading ammeters: current transformers (CTs) and Hall-effect types.

5.3.2.1 Current-transformer ammeters

A transformer is commonly used to convert the current being measured to a proportionately smaller current for measurement by an ac ammeter. There is very little resistive loading with these ammeters, and when a split-core transformer is used, the circuit to be measured is not interrupted. Clamp-on CTs cannot be used to measure dc currents. Caution is recommended when interpreting readings obtained with a CT-type device because some of these ammeters may not be true-rms-reading meters.

The transformer inductively couples the current being measured to a secondary consisting of N turns of wire (N_s). If the current being measured is I, and if we assume the primary is equivalent to a single turn, the secondary current, I_s, is calculated as shown in Equation (5.1):

$$I_S = I / N_S \tag{5.1}$$

5.3.2.2 Hall-effect ammeters

The "Hall-effect" is the ability of semiconductor material to generate a voltage proportional to the current passed through the semiconductor, in the presence of a magnetic field. This is a "three-dimensional" effect, with the current flowing along the x-axis, the magnetic field along the y-axis, and the voltage along the z-axis. The generated voltage is polarized so that the polarity of the current can be determined. Both ac and dc currents can be measured.

Negative-feedback technology has eliminated (or greatly reduced) the effects of temperature variations and high-frequency noise on Hall-effect current probes. Hall-effect ammeters are affected by temperature variations (as is any semiconductor device) and by extreme high-frequency noise. Filtering is added to reduce this effect.

Copyright © 2006 IEEE. All rights reserved.

5.3.2.3 Direct-reading ammeters

Direct-reading ammeters employ a current shunt and carry some of the line current through them for measurement purposes. They are part of the circuit being measured. Direct-reading ammeters include electrodynamometer types, moving-iron-vane meters, and thermocouple types that drive dc-responding D'Arsonval meters. All of these ammeter types respond directly to the current squared and are not true rms meters. The direct-reading ammeter does not lend itself well to the power quality site survey because the circuit to be measured must be broken to insert the device.

5.3.2.4 Current measurement considerations

When using a current measurement device, there are several factors that must be considered in order to ensure that the intended measured parameter has been accurately obtained. These include issues with dc currents, steady-state vs. transient measurements, and high crest-factor loads.

5.3.2.4.1 DC component on ac current

All the ac ammeters discussed here are capable of responding to ac currents with dc components. The low-frequency response of CT-type ammeters falls off rapidly as the dc component of the measured current increases. This is due to nonlinear characteristics of the core near the saturating region. Another possible effect of dc current arises from the fact that any magnetic core can become magnetized by passing relatively large dc currents through it. The result is a need for periodic degaussing.

5.3.2.4.2 Steady-state values

Most multimeters commonly used by the electrical industry are intended for providing steady-state values of current or voltage. The measured rms current or voltage is sampled or "averaged" over several cycles. By necessity, real-time meters cannot display cycle-by-cycle activity for a 60 Hz system. The response time of analog meter movements is much greater than the 16 ms period of 60 Hz. In fact, digital meters deliberately delay updating the display to eliminate bothersome flicker that occurs with updates quicker than about 0.1 s.

Steady-state load current in all phases and neutral conductors should be measured with a true rms ammeter as per the wiring and grounding tests described in Chapter 6. Steady-state peak current should be measured with an oscilloscope and current probe or power monitor. Measurements with a moving coil or "peak hold" ammeter can give erroneous information.

5.3.2.4.3 Inrush and start-up current values

It is often desirable to accurately measure the transient currents and voltages that result from the turn-on of electronic loads and other equipment. For example, during start-up of an induction or dc motor, these initial currents can be several times the steady-state value.

To measure such brief currents, a fast-responding ammeter is required, along with a matching circuit to either display the peak current or record it. It is also possible to use an oscilloscope or power monitor with a fast responding CT-type current probe.

Direct-reading ammeters are far too slow to respond to rapid changes. Both the CT-type and Hall-effect ammeters are capable of response up to hundreds of megahertz, or even gigahertz, although additional circuitry must be added to hold the desired peak values. In any case, the specifications of the probe and ammeter selected should be reviewed to ensure that the current range and frequency response are within the window needed to accurately record the event in question.

 Copyright © 2006 IEEE. All rights reserved.

5.3.2.4.4 Crest factor

The ratio of peak-to-rms current is known as *crest factor.* This measurement is important in the assessment of nonlinear loads. As an example, personal computers and many other loads that use switch-mode power supplies contain a bridge rectifier and storage capacitor. These loads can produce current wave shapes with typical crest factors of 2.5. When many of these loads are paralleled, the high crest factor contributes to the total harmonic distortion of both the voltage and current waveforms at the site.

Measurement instruments typically specify an accuracy limit when measuring high crest-factor loads. If a high crest factor is measured, it is important to make sure the instrument is capable of interpreting the wave shape correctly.

5.4 Descriptions of site survey tools

Site survey instrumentation can be divided into two categories. These categories are instruments used to

a) Measure or analyze power flow components such as voltage, current, energy, and harmonics.

b) Measure or verify the physical power delivery infrastructure such as grounding integrity, solid wiring connections, and proper wiring configuration.

The available measurement equipment commonly used to perform various portions of the power quality survey was shown in Table 5-1, along with the applicable analysis function. Subclauses 5.4.1 through 5.4.12 describe each tool with more detail as to the benefits or limitations associated with each instrument.

5.4.1 Infrared detector

The overheating of transformers, circuit breakers, and other electrical apparatus is often impossible to detect from current and voltage measurements. Infrared detectors produce images of the area under investigation. Overheated areas become apparent in contrast to normal temperature images. The availability of small handheld versions of these devices has made them more feasible for the power quality site survey.

5.4.2 Receptacle circuit testers

Receptacle circuit testers are devices that use a pattern of lights to indicate wiring errors in receptacles. These devices have some limitations. They may indicate incorrect wiring, but cannot be relied upon to indicate correct wiring especially in cases where poor connections exist.

5.4.3 Ground circuit impedance testers

Ground impedance testers are multifunctional instruments designed to detect certain types of wiring and grounding problems in low-voltage power distribution systems. Some instruments are designed for use on 120 V ac single-phase systems while others can be used on both single- and three-phase systems up to 600 V ac. The primary test function is impedance measurement of the EGC or neutral (grounded conductor) from the point of test back to the source neutral-ground bond. Additional test functions include detection of wiring errors (e.g., reversed polarity, open EGC, and open neutral), voltage measurement, the presence of neutral-ground shorts, and IG shorts.

5.4.4 Earth ground resistance testers

In practice, the resistance of the earth grounding electrode is tested when the building is inspected, following its construction, but at no other time. It is recommended that ground resistance tests be conducted with a fall-of-potential method instrument (see IEEE Std 81™-1983 [B8]).

Copyright © 2006 IEEE. All rights reserved.

5.4.5 Oscilloscope measurements

In its simplest form, the oscilloscope is a device that provides a visual representation of a voltage plotted as a function of time. Even a limited-feature oscilloscope can be quite useful in detecting the presence of harmonics on an electrical system. The use of oscilloscopes in site surveys has become more popular with the introduction of lightweight, battery-operated handheld versions.

5.4.5.1 Line decoupler and voltage measurements

Voltage measurements are relatively straightforward using an oscilloscope. The input is connected to the voltage of interest with the appropriate lead. If a voltage above the range of the oscilloscope is to be examined, probes with resistance-divider networks are available to extend the range of the instrument by a factor of 10 or more. Capacitively coupled voltage step-down devices are also available. The frequency responses of the capacitively coupled voltage step-down devices are nearly constant from the power frequency to the lower radio-frequency range.

Care is advised when attempting single-ended voltage measurements on energized power conductors. Only phase-to-neutral or phase-to-ground voltages should be measured, such that the ground of the oscilloscope probe is never connected to a hot conductor. This condition could produce a hot chassis and a ground-fault condition. Even if the scope is battery powered, care must be taken to ensure that the use of two single-ended probes does not provide a fault path in the event that one of the probes is reversed. Two channels should be used to measure line-to-line voltages as a difference between the channels. Whenever possible it is recommended that a voltage isolator be used to measure power line voltages. The practice of opening the equipment ground at the oscilloscope power cord is strongly discouraged and is prohibited (see IEEE Std C62.45™).[2]

5.4.5.2 Clamp-on current transducer and current measurements

The oscilloscope cannot measure current directly, only a voltage produced as a current is passed through a resistance. Measurements of currents based on the use of a shunt (current-viewing resistor) can be made with a differential input provided on oscilloscopes. If only a single-ended input is available, the signal is then applied between the high input and the oscilloscope chassis, creating a ground loop. Attempts are sometimes made to break this ground loop by disconnecting the EGC of the oscilloscope. As previously stated, this practice of “floating the scope” is a safety risk and is strongly discouraged.

Clamp-on CTs provide a means of isolating the oscilloscope from the circuit being tested. Some models have a resistance in place across the secondary of the CT to facilitate use with test equipment. In cases where the user must supply the secondary resistor, the resistance should be kept to a minimum to prevent saturation of the CT core. If the core becomes saturated, the oscilloscope waveform will show a different harmonic content than is present in the primary circuit.

One bothersome characteristic of CTs, in general, is a nonlinear frequency response. Typical CTs give accurate current reproduction only over the range of 50 Hz to 3 kHz. Units with “flat” frequency response up through several kilohertz are available but costly. In some current probes, digital correction of frequency response is possible.

5.4.6 Power line monitors

Power monitors are a new class of instrumentation developed specifically for the analysis of voltage and current measurements (see Figure 5-1). Time-domain and limited frequency-domain measurements are possible. Where their cost can be justified, power monitors are recommended instruments for conducting

[2]Information on references can be found in 5.6.

 Copyright © 2006 IEEE. All rights reserved.

site surveys or longer term monitoring programs. Table 5-1 lists the measurements power line monitors can make. It is a matter of user preference as to whether power monitors that are likely to concentrate on wiring and grounding measurements should be employed in the early stages of a site survey. The multiple-featured power monitors often contain true rms voltage and current measurement capability, which is necessary for most of these measurements.

Although developed for the common application of detecting voltage aberrations that affect the operation of electronic equipment, it should be understood that simply because a power line variation was detected, the event was not necessarily damaging or disruptive to the load equipment. A few examples of typical power anomalies recorded by power line monitoring equipment can be found in Dorr [B5], Hughes and Chan [B7], and Sabin et al. [B12]. Power line monitors are of four basic types: event indicators, text monitors, waveform analyzers, and steady-state power analyzers.

Figure 5-1—Power line monitor

WARNING

Workers involved in opening energized power panels are required to abide by the prescriptions of NFPA 70E-2004 [B11] concerning appropriate protective equipment, as well as government regulations codified in CFR Title 29, Parts 1910 [B2] and 1926 [B3], and in the National Electrical Safety Code® (NESC®) (Accredited Standards Committee C2-2002) [B1].

At present, there are no standards for categorizing types of events recorded by these power monitors. Consequently, the type of event recorded by different power monitors may vary from manufacturer to manufacturer. The 1159 Working Group on monitoring power quality has provided a set of terms to describe power line variations (see IEEE Std 1159™-1995 [B9]). This recommended practice is likely to impact the future terminology used by power line monitor manufacturers to describe or categorize each kind of power line variation.

5.4.6.1 Event indicators

The simplest and least expensive types of power line monitors are known as *event indicators.* Event indicators detect, classify, and indicate power line variations when they occur. Individual events are not identified by time of occurrence. Data output consists of an illuminated display or alarm that indicates the

Copyright © 2006 IEEE. All rights reserved.

prior occurrence of an event. Event indicators are recommended for identifying the need for additional power line monitoring with more sophisticated instrumentation.

5.4.6.1.1 Data capture techniques

Event indicators capture disturbance data by comparing the monitored parameter, usually ac voltage, to one or more threshold parameters. When the threshold parameter is exceeded, an event is detected and indicated. The comparison of monitored parameter to threshold parameter may be accomplished by analog techniques, digital techniques, or by combinations of analog and digital comparison circuits. Threshold parameters may be fixed or adjustable by the user over a specified range to accommodate different monitoring circumstances. Some examples of common threshold parameters include the following:

a) AC rms voltage. With rms sensing or average sensing, the measurement interval should be an integral number of half-cycles of the fundamental power frequency. With peak sensing, the measurement interval should be one half-cycle of the fundamental power frequency.

b) Surge (transient) voltage. Peak detection should be used for disturbance events of short duration.

c) Frequency. The measurement interval should be small in comparison with the duration of the event to be measured.

Characteristics of threshold parameters determine the types of events that are detected. Therefore, a complete understanding of the threshold parameters of a given instrument is essential for proper application of the event indicator.

5.4.6.1.2 Recording and reporting mechanisms

Having detected the power line variation, event indicators store the data as a count, an amplitude, or both. Event data are then reported as a cumulative count or as an amplitude, possibly accompanied by blinking lights, audible alarms, or other forms of annunciation.

5.4.6.1.3 Analysis functions

Event indicators provide minimal analytical capability. The user is alerted to the prior occurrence of a disturbance event, but lacking descriptive information and time of occurrence of individual events, the user is unable to analyze causes or consequences of the events that occurred. Therefore, very little guidance concerning the nature and solution of the suspected ac power problem is possible.

5.4.6.2 Text monitors

Text monitors detect, classify, and record power line abnormalities. Individual events are recorded by time of occurrence and alphanumeric descriptions that are representative of events occurring during a given time interval. Data output may be reported on paper or electronic media, possibly accompanied by alarm annunciation.

5.4.6.2.1 Data capture techniques

Text monitors use threshold comparison techniques, which are similar to those of event indicators (see 5.4.6.1.3), to detect events. Monitored parameters are continually compared to one or more threshold parameters. When a threshold parameter is exceeded, an event is detected and numerous characteristics of the event may be stored. As with event indicators, threshold comparison may be analog or digital, fixed or adjustable, over a specified range. Some examples of common threshold parameters are as follows:

a) AC rms voltage. With rms sensing or average sensing, the measurement interval should be one or more periods of the fundamental power frequency. With peak sensing, the measurement interval should be no more than one-half period of the fundamental power frequency.

 Copyright © 2006 IEEE. All rights reserved.

b) Surge (transient) voltage. Peak detection should be used for disturbance events having short duration.

c) Frequency. The measurement interval can be less frequent than that for transients but should still be small with respect to the rms change being measured.

Characteristics of the threshold parameters determine the types of events that are detected. Therefore, a complete understanding of the threshold parameters and detection methods of a given instrument is essential for proper usage of the text monitor.

5.4.6.2.2 Recording and reporting mechanisms

The recording and reporting mechanisms of text monitors facilitate the incorporation of numerous measurement capabilities. When an event is detected, these measurements are recorded to comprise an alphanumeric description that is representative of the event. The accuracy of this alphanumeric representation depends upon measurement parameters, measurement techniques, and the extent of recorded detail. An extensive variety of measurements is possible, but the most common include the following:

a) *Time of occurrence.* The time that the event begins should be measured with as much precision as may be required for a given application. Specifications range from the nearest second to the nearest millisecond.

b) *AC rms voltage.* Each half-period of the fundamental power should be measured.

c) *Surge (transient) voltage.* Peak voltage amplitude measured with respect to the power frequency sine wave. Duration, rise time, phase, polarity, and oscillation frequency may also be measured.

d) *Frequency.* The measurement interval should be from 0.1 s to 1.0 s.

e) *Total harmonic distortion.* The measurement interval should be from 0.1 s to 1.0 s. Amplitude and phase of individual harmonic numbers may also be measured.

The text monitor stores all recorded characteristics of the event, and then composes the measured data into an alphanumeric format that is representative of the original recorded event. A sequential series of alphanumeric descriptions is then reported to paper printout or electronic media.

Text monitors may have other features, beyond the five most common. Examples include common-mode noise detection, temperature, humidity, and dc voltage and current measurement.

5.4.6.2.3 Analysis functions

The sequential recording of events, with precise time of occurrence, by text monitors enables the user to correlate specific power line disturbances with misoperation or damage of susceptible equipment. Furthermore, the alphanumeric description of the event is useful in determining the cause and probable consequences. Other data contained within the alphanumeric description can be statistically related to determine the probability of various power line deviations occurring at the monitored site. Analysis functions are limited only by the extent of the alphanumeric description and by the skill and experience of the user. Therefore, the analysis capabilities of text monitors may be very extensive.

5.4.6.3 Waveform analyzers

Waveform analyzers are power line monitors that detect, capture, store, and record power line aberrations as complete waveforms supplemented by alphanumeric descriptions common to text monitors. The ability to capture, store, and recall waveforms makes the waveform analyzer the preferred choice for intensive analysis of ac power quality. Individual events are recorded by time of occurrence with waveforms and alphanumeric measurements that are representative of events occurring during a given time interval. Data output may be reported on paper or electronic media or via the Internet, possibly accompanied by alarm annunciation.

Copyright © 2006 IEEE. All rights reserved.

5.4.6.3.1 Data capture techniques

Waveform analyzers use sampling techniques to decompose the ac voltage waveform into a series of discrete steps that can be digitally processed, stored, and eventually recombined to represent the original ac voltage waveform. Waveform sampling occurs continuously at a fixed or variable rate. High sampling rates result in better representation of the disturbance waveform and greater storage requirements.

Although waveform sampling is continuous, waveform analyzers store only the sampled data when an "out-of-bounds" event is detected. Event detection is determined by comparison of threshold parameters with the monitored parameter. As with text monitors, threshold comparison may be analog or digital, fixed or adjustable, over a specified range.

Due to the continuous waveform sampling, threshold comparison algorithms tend to be more complex than those of text monitors. However, this complexity provides tremendous flexibility in controlling the types of disturbance waveforms that are detected. As with all power disturbance monitors, a complete understanding of the threshold parameters and detection methods of a given instrument is essential for proper usage of the waveform analyzer. It should also be understood that the waveform analyzer processes data based on the assumption that proper wiring and grounding preexists.

5.4.6.3.2 Recording and reporting mechanisms

When an event is detected, the digitized samples are stored in memory. As subsequent processing, measurement, and reporting of the event will be based entirely upon the stored samples, the waveform analyzer must retain sufficient data from before and after the detection point to accurately reconstruct the entire power line variation.

Having captured and stored the digitized data, the waveform analyzer is able to compute numerous parameters related to an event. These measurements of power quality characteristics are at least as extensive and as accurate as those available from text monitors. Furthermore, the digitized data can be formatted to provide a detailed graphic representation of the waveform associated with the recorded event.

This graphic reporting may be accomplished by paper printout or electronic media such as magnetic tape, diskettes, and cathode-ray tube (CRT) displays, or Internet Web sites. With accuracy of the graphic and alphanumeric representation of the event limited only by measurement techniques and storage capacity, waveform analyzers can provide the most complete description of a power line variation that is practical from a power analyzer.

5.4.6.3.3 Analysis functions

The graphic reporting of the recorded waveform enables the user to perform several additional analysis functions. First, the time-based correlation of disturbance waveforms with misoperation of electronic equipment can facilitate more meaningful susceptibility testing followed by corrective design improvements. These design improvements, both at the system and equipment levels, can lead to improved immunity against disturbing types of ac power line variations. Second, the characteristic waveform of certain disturbance sources can facilitate the identification, location, and isolation of these disturbance sources. These analytical functions make the waveform analyzer most suitable for analyzing complex power quality problems when properly applied by the knowledgeable user.

5.4.6.4 Steady-state power analyzers

A counterpart to the transient event analyzer is the steady-state type, which is very useful in performing analysis of the nominal energy demand characteristics of a facility. By sampling voltage and current on multiple channels, these monitors can display or calculate a large number of power line or load parameters, such as voltage, current, distortion power factor, displacement power factor, watts, volt-amperes, reactive

 Copyright © 2006 IEEE. All rights reserved.

volt-amperes, total harmonic voltage distortion, total harmonic current distortion, phase imbalance, and efficiency.

5.4.6.4.1 Data capture techniques

Steady-state analyzers use sampling techniques to decompose the ac voltage waveform into a series of discrete steps that can be digitally processed, stored, and eventually recombined to represent the original ac voltage waveform. Waveform sampling occurs at a fixed or variable rate. Although waveform sampling is continuous, steady-state analyzers only update their display or readout every second or so to eliminate nuisance toggling of reported values.

5.4.6.4.2 Recording and reporting mechanisms

The steady-state analyzer is able to compute numerous parameters based on the sampling of voltages and currents. The reporting mechanism is typically a digital display, and an additional paper-tape printout is usually available.

5.4.6.4.3 Analysis functions

The reporting of numerous power flow parameters enables the user to gain valuable insight into the characteristics of load and power distribution. The signature waveforms of certain loads can facilitate the identification, location, and isolation of these loads when they are found to be disturbing to parallel equipment. These analytical functions make the steady-state power monitor most suitable for analyzing site and load characteristics when properly applied by the knowledgeable user.

5.4.7 Harmonic measurements

In order to obtain measurements of harmonic distortion relative to the power frequency, a true rms sample of the voltage or current of interest is required. The most popular method is to obtain a digitized sample of the wave shape and perform a fast Fourier transform (FFT) computation. The result of the FFT analysis yields the percentages for the fundamental frequency and for the multiples of the fundamental. Power line wave-shape analyzers and oscilloscopes with FFT options are popular choices to perform this harmonic analysis.

Low-frequency or broadband spectrum analyzers may also be used to perform harmonic analysis. The newest devices available to measure harmonics are lightweight handheld instruments, similar in size to a multimeter, which are capable of both wave-shape display and harmonic analysis.

5.4.8 Expert systems

Knowledge-based and expert-system software are available for recording and analyzing power quality site survey data and reporting the results.

5.4.8.1 Data collection techniques

Expert systems use data input by the user, data encoded as procedures or as rules, and possibly data from instrumentation. Embedded and other instrumentation-based expert systems have data capture (of collected data) mechanisms that are specific to the instrument being used. Instrument-independent expert systems collect data by presenting questions to the user for response. Both instrumentation-based and instrument-independent expert systems use data encoded in the form of knowledge structures to process measurement or input data.

Copyright © 2006 IEEE. All rights reserved.

5.4.8.2 Reporting mechanisms

Measurements and user-input data are typically recorded onto mass storage media. Communications interfaces may be used to accomplish data recording. A common technique in data recording is to store the data in an electronic database that can be accessed by the expert system. Processed data and analysis results are reported on the computer screen or by means of printed reports. Reports typically include tutorial information explaining the expert system's reasoning.

5.4.8.3 Analysis functions

Expert systems for power quality analysis differ in scope and depth, and hence, in analysis capabilities. Embedded and instrument-based expert systems are designed to assist in the analysis of specific measured data, including one or more types of power disturbance. Expert systems that are not instrument-dependent have broader scope, but perhaps less depth relative to analyzing measured data. Site survey analysis software is an example of this type of expert system, the scope of which includes wiring, grounding, surge protection, power monitoring, data analysis, and power conditioning equipment recommendation.

Expert systems can provide consistency and help in the collection, analysis, and reporting of power quality data if appropriately applied by the user.

5.4.9 Circuit tracers

Location of a specific phase or breaker may be easily accomplished with a circuit tracer. Various methods are used to draw or inject a special frequency or signal at the receptacle to be traced. A receiver is then used back at the panel box to detect the signal. Typically the receiver will have an adjustable gain so that the circuit in question can be pinpointed.

5.4.10 Electrostatic discharge (ESD)

Electrostatic charge can be measured with special handheld meters designed for that purpose.

5.4.11 Radio-frequency interference and electromagnetic interference (EMI)

Electric and magnetic field probes measure broadband field strength. A field-strength meter equipped with a suitable probe for electric or magnetic field sensing can be used to assess radio-frequency interference (RFI) or EMI more generally.

5.4.12 Temperature and relative humidity

Temperature and relative humidity is measured with a power monitor equipped with special probes. The rate of change of these parameters is at least as important as the absolute values of the temperature and relative humidity.

5.5 Measurement considerations

There are several factors related to either capabilities or limitations of measurement equipment that must be taken into consideration before deciding upon the appropriate instrument for a given measurement. These factors include, but are not limited to, bandwidth, sampling rate, refresh rate, resolution, and true rms response capability. These general considerations to be aware of are described in 5.5.1 through 5.5.4. Caution should be exercised when choosing instrumentation to investigate a problem. For example, though a transient is not recorded by a waveform analyzer, it cannot be assumed that no transient occurred unless it is certain that the bandwidth, sampling rate, and resolution are such that the transient was within the instrument's capture capabilities.

 Copyright © 2006 IEEE. All rights reserved.

5.5.1 Bandwidth

The frequency spectra within which accurate measurements can be obtained are limited to the bandwidth of the equipment being used. The bandwidth of the instrument used should be wider than the frequency spectra of the expected events to be monitored. For 60 Hz steady-state monitoring this bandwidth issue is likely not a problem, but if the event of interest is a high-frequency transient caused by a switching event or by a lightning surge, the bandwidth must be higher than the rise time of the event to be captured (typically, megahertz ranges).

5.5.2 Sampling rate

This specification is important when the power wave shape in question must be digitized in order to perform computational analysis. The sampling rate should be at least twice the highest frequency of interest for a given computation. For example, a harmonic analysis out to the 50th harmonic (3000 Hz) would require a sampling rate of at least 6000 Hz. For sampled data, anti-aliasing filters built in to the metering device are typically necessary to ensure accuracy of the reported information.

5.5.3 Resolution

The vertical resolution of a wave shape is dependent upon the sampling rate as well as the number of bits available for storage or processing of the acquired sample. Most digitizing instruments utilize at least 8 bits to obtain reasonable vertical resolution. This yields measurement accuracy roughly within ±3% of the actual value for ac voltage wave shapes.

5.5.4 True rms considerations

It is extremely important to understand the potential limitations of the instrumentation being used to measure either voltage or current. Table 5-2 and Table 5-3 illustrate the point that there can be considerable differences in the displayed or reported quantities for different types of instruments. Table 5-2 shows the differences one might encounter when measuring some typical wave shapes with several popular handheld multimeters. Note that only the true rms type meter was able to correctly report the actual rms value for all of the wave shapes.

Because the electrical environment contains loads that are typically nonlinear in nature, it is recommended practice to use true rms measurement equipment to monitor voltage and current parameters.

Table 5-2—Displayed values from different meters for some typical current waveforms

Meter type	Circuit	Sine wave	Square wave	Distorted wave	Light dimmer	Triangle wave
Peak method	Peak/1.414	100%	82%	184%	113%	121%
Average responding	Sine average 1.1	100%	110%	60%	84%	96%
True rms	RMS converter	100%	100%	100%	100%	100%

Copyright © 2006 IEEE. All rights reserved.

Table 5-3—Reported event magnitude and duration for some common power line monitors

Event description	Possible text reported or response by monitor A	Possible text reported or response by monitor B	Possible text reported or response by monitor C
Capacitor switching transient	May miss the event if thresholds are set incorrectly	Reported as a transient with amplitude equal to the initial falling edge value	May report the event as both a subcycle variation and as a transient
1/4 cycle interruption (dropout)	May miss the event if thresholds are set incorrectly	Reported as a sag to 50% of V_{nom} with duration of 10 ms	Reported as a sag to 90% of V_{nom} with duration of 100 ms
1 cycle interruption	Reported as a 1 cycle interruption	Reported as an interruption with duration 20 ms	Reported as a sag to 83% of V_{nom} with duration of 100 ms
Extraneous zero crossings	Reports multiple transients with same amplitude	Reports multiple transient events with same amplitude and may report frequency variations	Reports multiple transient events with same amplitude and may report frequency variations
10 cycle voltage sag to 80% of V_{nom}	Reports voltage sag to 80% of V_{nom} with duration of 10 cycles	Reports voltage sag to 80% of V_{nom} with duration of 10 cycles	Reports voltage sag to 80% of V_{nom} with duration of 10 cycles

Table 5-3 illustrates the differences that one might encounter when analyzing the text reports from several common power line monitors. Note that even though all of the monitors are true rms type the reported text is not the same (even when the graphical display is).

The point of Table 5-3 is not to find fault in any particular monitor brand, but merely to point out that there can and will be differences in the way the various monitor brands capture and report short duration events (microseconds to several cycles). Therefore, the user of a particular monitoring instrument should become familiar enough with that instrument to be able to correctly interpret the information that is collected and recognize the fact that two different instruments connected at the same point may not capture and report events identically.

Provided the event is within the capture capability of the monitor, and the printed or displayed waveform has enough resolution to display the captured event clearly, actual capture of the graphical voltage or current wave shape is the best way to ensure that a monitored event is truly what was reported.

5.5.5 Instrument calibration verification

As a final point for consideration, it is recommended that measurement equipment be calibrated periodically to ensure accuracy. It is also a good practice to periodically compare the readings of the site survey instruments to a second piece of equipment that is known to read accurately. This is particularly important when the measuring devices are frequently shipped or transported to survey locations. Mishandling of the equipment during shipping can cause it to become less accurate. Simply having a valid calibration sticker does not necessarily guarantee accuracy.

 Copyright © 2006 IEEE. All rights reserved.

5.6 Normative references

The following referenced document is indispensable for the application of this recommended practice. For dated references, only the edition cited applies. For undated references, the latest edition of the referenced document (including any amendments or corrigenda) applies.

IEEE Std C62.45, IEEE Recommended Practice on Surge Testing for Equipment Connected to Low-voltage (1000 V and Less) AC Power Circuits.[3]

5.7 Bibliography

Additional information may be found in the following sources:

[B1] Accredited Standards Committee C2-2002, National Electrical Safety Code® (NESC®).[4]

[B2] CFR Title 29, Part 1910, Occupational Safety and Health Standards (OSHA).[5]

[B3] CFR Title 29, Part 1926, Safety and Health Regulations for Construction (OSHA).

[B4] Clemmensen, Jane M., "Power Quality Site Survey Instrumentation and Measurement Techniques," *IEEE I&CPS* (1990), Paper No. 90CH2828-2/90/000-0126.

[B5] Dorr, D., "Point of Utilization Power Quality Study Results," *IEEE Transactions on Industry Applications,* vol. IA-31, no. 4, July/Aug. 1995.

[B6] Dorr, D., et al., "Interpreting Recent Power Quality Surveys to Define the Electrical Environment," *IEEE Transactions on Industry Applications,* vol. 33, no. 6., Nov./Dec. 1997.

[B7] Hughes, M.B., and Chan, J. S., "Canadian National Power Quality Survey Results," *Proceedings of EPRI PQA '95,* New York, New York, May 9–11, 1995.

[B8] IEEE Std 81-1983, IEEE Guide for Measuring Earth Resistivity, Ground Impedance, and Earth Surface Potentials of a Ground System— Part 1: Normal Measurements.[6]

[B9] IEEE Std 1159-1995, IEEE Recommended Practice for Monitoring Electric Power Quality.

[B10] Melhorn, Christopher J., and McGranaghan, Mark F., "Interpretation and Analysis of Power Quality Measurements," *IEEE Transactions on Industry Applications,* vol. 31, no. 6, pp. 1363–1370, Nov./Dec. 1995.

[B11] NFPA 70E-2004, Standard for Electric Safety in the Workplace.[7]

---

[3]IEEE publications are available from the Institute of Electrical and Electronics Engineers, Inc., 445 Hoes Lane, Piscataway, NJ 08854, USA (http://standards.ieee.org/).

[4]The NESC is available from the Institute of Electrical and Electronics Engineers, Inc., 445 Hoes Lane, Piscataway, NJ 08854, USA (http://standards.ieee.org/).

[5]CFR publications are available from the Superintendent of Documents, U.S. Government Printing Office, P.O. Box 37082, Washington, DC 20013-7082, USA (http://www.access.gpo.gov/).

[6]The IEEE standards or products referred to in this subclause are trademarks of the Institute of Electrical and Electronics Engineers, Inc.

[7] NFPA publications are available from Publications Sales, National Fire Protection Association, 1 Batterymarch Park, P.O. Box 9101, Quincy, MA 02269-9101, USA (http://www.nfpa.org/).

Copyright © 2006 IEEE. All rights reserved.

[B12] Sabin, D. D., Grebe, T. E., and Sundaram, A., "Surveying Power Quality Levels on U.S. Distribution Systems," *Proceedings 13th International Conference on Electricity Distribution* (CIRED 95), Brussels, Belgium, May 1995.

 Copyright © 2006 IEEE. All rights reserved.

Chapter 6
Site surveys and site power analyses

6.1 Introduction

Electronic systems and equipment may be more sensitive to disturbances in the ac power system than are conventional loads. The effects of power disturbances on electronic load equipment can take a wide variety of forms, including misoperation, data transfer errors, system halts, memory or program loss, and equipment damage. In many cases it is difficult to determine whether the system hardware and software malfunctions are actually caused by disturbances in the power system supplying the equipment, since frequently these symptoms are identical to those resulting from other causes. For this reason, it is necessary to perform some level of survey and analysis of the ac power system to determine the cause. The site survey is the primary tool utilized in locating the source of the disturbance.

6.2 Objectives and approaches

The basic objectives of surveys and site power analyses are as follows:

— Determine the soundness of the premises wiring and grounding system supplying the equipment.

— Determine the quality of the ac voltage supplying the equipment.

— Determine the sources and impact of power system disturbances on equipment performance.

— Analyze the survey data to identify cost-effective improvements or corrections, both immediate and future.

It is important to keep these approaches in mind when a site is experiencing problems that appear to be power related. All too often, corrective action (in the form of some type of power conditioning equipment) is installed in a hurried attempt to solve the problem. Although this method will sometimes minimize the problem, in other cases it may do little or nothing to solve the problem and can even aggravate conditions resulting in further degradation of system performance levels.

To successfully resolve problems in the power system serving electric loading equipment, a thorough analysis of the power system and loads should be conducted to define the areas of concern as accurately as possible before attempting to solve the problem. This approach can enable cost-effective solutions to be implemented that not only correct the existing conditions but also minimize future problems.

The key is to understand and define the problem before attempting to solve it. The following are some of the parameters that need to be defined:

a) When did the problem start?

b) What type of equipment is experiencing problems? A secondary concern to this question would be determining the sensitivity of the device.

c) What types of equipment malfunctions or failures are occurring (e.g., data loss, lock-ups, component damage)?

d) When do the problems occur (e.g., time of day, day of week, particular system operation)?

e) Are coincident problems occurring at the same time (e.g., lights flicker and motor slowdown)?

f) What are the possible problem sources at site (e.g., arc welders, air conditioning, copy machines)? What is the proximity to the equipment?

g) Is there any existing or recently installed protection for equipment [e.g., transient voltage surge suppressor (TVSS) or isolation transformer]? This would be necessary to determine if the premises wiring system or the equipment is compatible with the mitigating device.

Copyright © 2006 IEEE. All rights reserved.

h) Has the addition of protection or power conditioning equipment alleviated the problem or made it worse?

i) Are there any possible environmental concerns [e.g., lightning, electrostatic discharge (ESD), and radio-frequency interference/electromagnetic interference (RFI/EMI)]?

j) Are there any recent changes to the premises wiring distribution system (e.g., ground scheme, additional electrical service entrances, and equipment relocation)?

k) Are there any recent changes to the electric utility's distribution system?

These parameters should provide information for a preliminary analysis to decide if immediate recommendations for remedial action can be taken.

6.3 Coordinating involved parties

Generally, it is the responsibility of the end user, electronic equipment owner, or the building owner to provide and maintain a proper supply of ac power from the utility service entrance to the equipment. In addition to the end-use equipment owner, other involved parties should be informed as to the objectives of the site survey. Effective communication between these parties can help ensure that the recommendations for improvement or correction may be implemented in a mutually acceptable manner.

6.3.1 Equipment user or owner

The user of electronic equipment is primarily concerned with the productivity of the equip-ment. Downtime translates into loss of production, increased operating costs, and decreased revenues and profits. Technical details on power disturbances are normally of little interest to the end user who cares only that the equipment is not performing as intended and it is costing the company money. It is often necessary to educate the equipment user or owner so they may realize that it is in their best interest to provide and maintain a sound power source to operate the equipment. Keeping an accurate log of equipment errors and malfunctions can provide valuable information in solving site power problems. This log should include the time and date of the disturbance as well as the type of equipment and associated error messages.

6.3.2 Electronic equipment manufacturer/supplier

Initially, it is the responsibility of the equipment manufacturer or supplier to provide the power, grounding, and environmental specifications and requirements for their equipment. If this has not been done, the effectiveness of the service representative may be reduced when a power-related problem develops since it is the service engineer who normally determines the problem and relates this information to the end user.

When the problem areas have been defined, the recommended methods of correction should be clearly communicated to the end user so that an incorrect or partial solution does not occur. For example, some equipment manufacturers require a grounding system for their equipment that may not conform to the National Electrical Code® (NEC®) (NFPA 70, 2005 Edition).[1] Although grounding practices that go beyond the NEC requirements may be necessary for electronic equipment to operate properly, it is never acceptable to violate the NEC.

6.3.3 Independent consultant

In many cases, a practical approach is to enlist the services of an independent consultant who specializes in solving power quality problems. The judgment and opinions of a qualified, independent consultant are normally acceptable to both the end user and the equipment manufacturer/supplier.

[1]Information on references can be found in 6.9.

 Copyright © 2006 IEEE. All rights reserved.

Care should be used in the selection of the consultant to ensure that the consultant has experience in solving power quality problems for electronic equipment and does not have a vested interest in the recommended solution. For example, vendors of power conditioning equipment may have significant experience in solving power quality problems but their recommended solutions may be biased toward their product line.

It is also recommended that a written agreement be reached with the consulting company that pertains to what they will, or will not, do regarding their services (i.e., time frame to complete the work, the cost of the survey).

6.3.4 Electrical contractor or facility electrician

The facility electrician or an electrical contractor is a necessary assistant in the verification of the power distribution and grounding system for the layout of the power system feeders, branch circuits, and panelboards. They may have knowledge of the electrical system and recent changes (e.g., wiring/grounding and equipment additions) that could provide clues to locating the problem. In addition, the electrician is essential for performing work necessary to correct or improve unsatisfactory wiring and grounding conditions.

6.3.5 Electric utility company

An effective site survey should include the involvement of the local electric utility. Utility personnel can provide site-specific information on disturbances (e.g., capacitor bank switching, and distribution circuit interruption history and reliability) that can occur on the utility system. Many power companies have an established power quality department whose staff includes engineers who have expertise on effects of power quality problems on electronic equipment.

It is important to involve someone familiar with the local power system and the various factors that affect power quality from location to location. The utility engineer can fill this role in evaluating which disturbances may occur on the utility system and which protective equipment may be required by the user. Potential changes to the utility system that may improve power quality can also be evaluated. Some electric utilities offer preliminary site surveys prior to construction of facilities or installation of electronic loads. The monitoring equipment used can provide useful data on power disturbances at the point of common coupling. A growing number of utilities offer in-depth site surveys to pinpoint the source of power disturbances and, if necessary, provide assistance in selection of the appropriate power conditioning equipment. In many areas, electric utility companies have recognized the importance of power quality and are taking an active role in helping their customers solve power-related problems.

6.4 Conducting a site survey

Site surveys and analyses can be conducted in various levels of detail depending on the magnitude of the problem, amount of data desired, and economic factors.

A recommended breakdown of site survey levels is as follows:

— *Level 1 survey.* Visual inspection, testing, and analysis of ac distribution and grounding system supplying the equipment.

— *Level 2 survey.* Level 1 plus monitoring of applied ac voltage and load current for the equipment.

— *Level 3 survey.* Levels 1 and 2 plus monitoring of site environmental parameters.

It is important to note that the systematic approach in performing the survey and promptly locating the cause of the problem will almost always depend upon

Copyright © 2006 IEEE. All rights reserved.

a) The experience of the survey team member(s). The more experience an individual has in solving problems pertaining to varying electrical environments (e.g., telecommunications, health care, and commercial/industrial), the greater the flexibility in successfully altering investigative methods to quickly locate and/or confirm the problem source.

b) The type of industry and environment in which the survey will be performed. For example, the survey practices to discern the cause of nuisance circuit-breaker trip-ping and overheated transformers for adjustable-speed drives (ASDs) may entail an entirely different procedure than used to find the cause of random computer failures within a commercial office building. The former may require a detailed harmonic analysis and the latter may require an investigation of the wiring and grounding system.

The level of the survey performed is a combination of how quickly the problem is located and the severity of the problem. In many cases, a Level 1 survey locates and corrects the problem. If it does not readily identify the cause, then the survey progresses to a Level 2 (or 3) as needed. When the desired level of the survey has been determined, the proposed analysis of results should be defined before any testing or power monitoring is initiated. Specific types of instruments are designed to detect specific problems and no single instrument has the capability to detect all types of problems. For example, a power monitor is designed to detect problems in the quality of the ac voltage; it will not detect wiring or grounding problems. Unless the quality of the wiring and grounding system is tested and verified, the data produced by a power monitor can be practically useless. Therefore, it is important that all premises wiring and grounding deficiencies be corrected before engaging in power line monitoring.

To conduct a site survey effectively, problem areas should be subdivided into at least three categories, as follows:

1) The condition of the ac premises wiring and grounding system
2) The ac voltage and current levels of the power system
3) The equipment environment, including temperature, humidity, ESD, and radiated EMI and RFI disturbances

The order in which these categories are analyzed is critical. Premises wiring and grounding should be tested and analyzed before any testing is conducted to determine the quality of the ac voltage and equipment environment. In many instances, the problem could be eliminated by employing proper wiring and grounding, thus making voltage and current monitoring no longer necessary.

6.4.1 Condition of the premises wiring and grounding system

Problems in industrial/commercial premises wiring and grounding account for a large share of all reported power quality problems. The greatest number of wiring and grounding problems is in the feeders and branch circuits serving the critical loads. The first activity in checking for power problems is to survey the integrity of the premises wiring and grounding system supplying the equipment. Problems in this category include such items as missing, improper, or poor-quality connections in the power wiring and grounding from the source of power to the load. They can be generally classified as mechanical problems. Through error or oversight, intentional or unintentional, the premises wiring and grounding system in many cases is not installed in accordance with the requirements of national, state, or local electrical codes and other specifications. For example, the NEC only permits a neutral-ground bond at the source of power (service entrance or transformer secondary of a separately derived system), yet improper neutral-ground connections are a common problem encountered on power systems in the field. Experience has shown that many electronic equipment installations experiencing malfunctions and failures have one or more problems in the premises wiring and grounding system supplying the equipment.

Once the installation has been placed in service, vibration can loosen connections. Loads cycling on and off create heating and cooling that can eventually result in poor-quality (high-impedance) connections. Also,

 Copyright © 2006 IEEE. All rights reserved.

periodic additions or modifications to the distribution system can result in missing, improper, or poor-quality connections.

Branch circuits are of lower power rating and are open to a greater variety of construction techniques and retrofit options, many of which cause problems. Caution should be exercised in the selection of test instruments used to conduct a verification of the power and grounding system. Use of the commonly available three-light circuit tester is not recommended and should be discouraged. These devices have some severe limitations and can provide a "correct" indication when the circuit being tested actually has one or more problems. In addition, they are incapable of indicating the integrity of the power conductors.

See Chapter 5, Table 5-1, for a discussion of recommended instruments to conduct the site survey.

6.4.1.1 Safety considerations

Safety considerations come first when making measurements on energized power systems. Some safety issues to consider are

a) The use of safety clothing, safety gloves, and safety glasses—OSHA requires electrical maintenance workers/electricians to complete basic electrical safety and first-aid training courses prior to working on energized ac electrical systems.

b) Working in pairs—An extra person can review test-equipment configurations, review test results, secure the test location while another person performs the actual measurements, and provide emergency medical assistance when necessary.

c) Instruments should be used and grounded using the manufacturer's recommendations.

d) Continuity measurements should be made on de-energized circuits. Some measurements may require the use of licensed or qualified electrical personnel.[2]

WARNING

Workers involved in opening energized power panels are expected to abide by the prescriptions of NFPA 70E-2002 [B14] concerning appropriate protective equipment, as well as government regulations codified in CFR Title 29, Parts 1910 [B3] and 1926 [B4].

6.4.1.1.1 Neutral-ground bond

The neutral and equipment grounding conductor (EGC) are required by the NEC to be bonded at the main service panel and at the secondary side of separately derived systems. Improper, extraneous neutral-ground bonds are a relatively common problem that not only create shock hazards for operating personnel, but can also degrade the performance of electronic equipment. Improper neutral-ground bonds at receptacles can often be detected using a wiring and grounding tester designed for that purpose.

A voltmeter can also be used to indicate if improper bonds exist at receptacles. A voltage measurement between neutral and ground at the outlets can indicate voltage ranging from millivolt to several volts under normal operating conditions and depending on loading, circuit length, etc. However, a reading of 0 V can indicate the possible presence of a nearby neutral-ground bond. Excessive current on equipment grounds in distribution panels also indicates the possibility of a load-side neutral-ground bond. Visual inspection of the neutral bus within distribution panelboards is necessary to verify and locate these bonds.

[2]The numbers in brackets correspond to those of the bibliography in 6.10.

Copyright © 2006 IEEE. All rights reserved.

6.4.1.1.2 Measurements for neutral conductor sizing

Measurements of load phase and neutral currents should be made to determine whether the load is sharing a neutral conductor with other loads and whether the neutral conductor sizing is adequate. For three-phase circuits supplying single-phase loads that have nonlinear current characteristics and share a common neutral, current in the neutral can exceed current in the phase conductor. This should be taken into account when sizing neutral conductors. Phase and neutral conductor measurements must be made with a true root-mean-square (rms) clamp-on ammeter to avoid inaccurate readings.

6.4.1.1.3 Transformer sizing

Procedures for ensuring proper transformer sizing must include the measurement of true rms voltages (phase/phase and phase/neutral), true rms currents (phases and neutral), and the harmonic analysis of the loads being served. The harmonic analysis of the voltages and the currents at the transformer determine the additional losses within the core and windings where nonlinear loads are being served. Chapter 8 discusses transformer derating for nonlinear loads or situations in which the load type cannot be determined in advance.

6.4.1.1.4 Equipment grounding conductor impedance

Electronic equipment is required by the NEC and local codes to be grounded through the EGC and bonded to the grounding electrode system at the power source. Impedance of the EGC from the electronic equipment back to the source neutral-ground bonding point is a measure of the quality of the fault return path. Impedance of the insulated EGC that is used for insulated/isolated grounding (IG) schemes and the metallic conduit in which the IG and circuit conductors are contained must both be tested for a low grounding impedance.

Measure the impedance of the EGC using a ground impedance tester. An “open ground” indication reveals no EGC connection. A high-impedance measurement indicates poor-quality connections in the equipment grounding system or an improperly installed EGC. Properly installed and maintained EGCs will exhibit very low impedance levels. Recommended practice is to verify an impedance level per Table 6-1. Achieving these levels based on the amperage rating of the overcurrent device for the feeder or branch circuit will also help assure personnel protection under fault conditions (see Kleronomos and Cantwell [B10]). In many cases, with larger sized EGCs, the impedance could be much less than the prescribed levels in Table 6-1.

6.4.1.1.5 Neutral conductor impedance

Impedance of the neutral conductor from the electronic equipment back to the source’s permissible neutral-ground bonding point is another important measurement. A low-impedance neutral is essential to minimize neutral-ground potentials at the load and reduce common-mode noise. The high levels of neutral current created by phase imbalance and nonlinear power supply operation contribute to these problems.

The instrument used to conduct the equipment ground impedance measurements in 6.4.1.1.4 may also be used to measure the neutral conductor impedance. The impedance level of the neutral conductor should be based on the feeder or branch circuit ampacity. The frequency of the load circuit should also be considered where a conductor may exhibit varying levels of impedance where harmonic currents are present. High impedance in the neutral conductor can be the result of poor-quality connections.

 Copyright © 2006 IEEE. All rights reserved.

Table 6-1—Impedance values (in ohms) for effective grounding of systems and equipment rated 600 V or less

Overcurrent device rating (A)	Circuit voltage to ground	
	120 V	277 V
10	1.6	—
15	1.0	1.0
20	0.8	0.7
25	0.6	0.6
30	0.5	0.5
40	0.4	0.3
60	0.10	0.10
100	0.10	0.07
125	0.06	—
150	0.05	—
200	0.04	—

6.4.1.1.6 Grounding electrode resistance

The purpose of the grounding electrode system is to provide an earth reference point for the facility. This may allow stable line-to-ground voltages as well as establishing a 0 V reference for non-current-carrying conductors. Earthing also provides a path for lightning and static electricity discharge currents. The grounding electrode system is typically buried or inaccessible except during construction of the facility or major remodeling.

The resistance of the grounding electrode system should be checked at the time of construction. As a practical matter and for safety reasons, it is usually not measured again. In order to take the measurement accurately, the grounding electrode system should be disconnected from all other earth grounds. For new construction, measure the resistance of the grounding electrode system with an earth ground tester using the fall-of-potential method (see IEEE Std 81™-1983 [B8] and Michaels [B13]).

The integrity of the grounding electrode conductor is important because it serves as the connection between the building grounding system and the grounding electrode system. To verify a conductive connection to an earthing reference, use a clamp-on ammeter to measure current flow in the grounding electrode conductor. Ordinarily there may be a small but finite current flow. A lack of current flow may be an indication of an open connection. Current flow on the order of the phase currents may indicate serious problems within the premises wiring system.

WARNING

Interrupting the current in grounding electrode conductor paths can be a shock hazard and should not be attempted.

Copyright © 2006 IEEE. All rights reserved.

6.4.1.1.7 Two-point bonding testing between multiple earthing references

Most lightning damage to electronic equipment occurs when a facility employs the use of multiple earthing references that are not intentionally, and effectively, bonded together. Under lightning and electrical system fault conditions, "step," "touch," and "transferred earth" potentials can develop between multiple earthing connections that are not part of a common grounding electrode system. Proper bonding between electrode systems can reduce the voltage drops between them and establish an equipotential plane within the facility so as to enhance personnel safety. For example, lack of bonding between the electrical system electrode and the communications system electrode may result in damage to modems, telephone answering machines, etc., during lightning and system fault conditions.

Bonding measurements should be performed to determine if there are intentional bonding connections made between multiple earthing references. A three-terminal or four-terminal earth ground resistance tester can be configured to a two-terminal device, which allows measurements between each of the different grounding electrode systems. This includes supplemental electrodes established for the electrical service, alternate power sources, and lightning protection systems.

This test procedure can also be used to show potential equipment damage and personnel shock hazards where improper remote grounding electrodes are commonly driven to reference industrial controllers in order to comply with an equipment manufacturers' specifications. Where the electrode can be safely disconnected, a measurement can be made between the electrical system's ground and the electrode for the industrial controller to verify ohmic differences between them.

6.4.1.1.8 High-frequency grounding

Many electronic loads, such as data processing and process-control equipment located in controlled environments, employ a grounding system that has low impedance at higher frequencies. These signal reference structures (SRSs) are connected in a prescribed manner that provides signal and power cabling, equipment frames, and other conductive items with an equipotential plane. The SRS should be bonded to the site's electrode grounding system.

6.4.1.1.9 Continuity of conduit/enclosure grounds

Electronic loads are recommended to be grounded with a separate EGC. The termination of the EGC can be either in an IG system, insulated from the conduit ground, or it can be terminated in the conduit ground system. Either termination is ultimately connected to the building ground system. Both the IG and the conduit ground should terminate at the first upstream neutral-ground bonding point. Ground impedance testers can be used to measure the quality of both the IG and conduit ground systems from the equipment to the power source.

Routing of phase, neutral, and EGCs through continuously grounded metallic conduit is recommended practice for electronic equipment performance in addition to meeting safety codes. Continuously grounded metal conduit acts as a shield for radiated interference.

6.4.1.2 Performance considerations

Recommended methods for the determination of performance-related parameters are discussed in 6.4.1.2.1and 6.4.1.2.2.

6.4.1.2.1 Multiple earth ground references

Interconnected electronic devices that do not share a common ground reference between them (e.g., equipment in different buildings linked together via phone or data cable) are particularly susceptible to equipment damage during lightning strike conditions. This condition exists in facilities that have multiple

 Copyright © 2006 IEEE. All rights reserved.

buildings where the earthing system for each structure can be at a different potential. Furthermore, continuous noise currents can develop and travel along the shields. These noise currents can change the intended information by altering the "bit" structure of the transmitted signals.

Separate earthing systems can also exist within the same building. For example, the improper application of a remote-driven ground rod to establish an IG system for electronic equipment can elevate remote electronic devices to a potential above or below other devices to which it may be interconnected.

If electronic equipment has a conducting connection to other devices within a structure, it is important that all interconnected devices be referenced at the same potential to minimize lightning damage. Otherwise, it may become necessary to provide some degree of optical isolation to create separation from the different grounding connections.

6.4.1.2.2 Separately derived systems

Separately derived systems have no direct electrical connection between the output supply conductors and the input supply conductors. Separately derived systems are required by the NEC to have a load-side neutral-ground bond that is connected to the grounding electrode system. All EGCs, any IG conductors, neutral conductors, and the metal enclosure of the separately derived system are required to be bonded together and bonded to the grounding electrode conductor. Visual inspections and measurements with a ground impedance tester can be used to determine the quality of these connections.

6.4.1.3 Wiring and grounding verification procedures

The services of qualified electrical maintenance personnel, when conducting verification and testing of the premises wiring system, should always be utilized. Their services will be needed to provide access to power panels and assist in conducting the tests with maximum safety. In addition, they may be able to provide valuable information (e.g., history and modifications) about the distribution system.

While conducting the testing program, close visual inspections of power panels, transformers, and all other accessible system components should be made. Loose connections, abnormal operating temperatures, and other such items that can provide clues to the quality of the distribution system are particularly important to note. A good point at which to start the distribution and ground testing is the main building service panel or supply transformer. If the quality of the earth ground system is questionable, an earth ground tester can be used to measure the resistance of this connection. Additional tests at this location should include measurement of rms voltage levels (phase-to-phase, phase-to-neutral, and phase-to-ground), current levels (phase, neutral, and ground), and verification of proper neutral-ground bonding.

From this point, each panel in the distribution system serving the equipment should be tested and verified. Tests should include voltages, currents, phase rotation, ground impedance, and neutral impedance. Verification should include proper isolation of the neutral conductor, proper conductor sizing, tightness of connections, and types of loads being served.

Upon completion of the panel testing and verification, all branch circuits supplying the sensitive equipment should be verified. These tests should include voltages, proper conductor termination (wiring errors), and the absence of neutral-ground and IG shorts, as well as measurement of ground and neutral impedance levels.

The recommended practice is to develop a systematic method of recording all observations and test results. This will enable efficient data analysis as well as ensure that no tests are overlooked. Figure 6-1(a), Figure 6-1(b), Figure 6-1(c), Figure 6-1(d), and Figure 6-1(e) illustrate a sample set of forms for recording test results.

Copyright © 2006 IEEE. All rights reserved.

Power Distribution Verification Test Data

System Type:

Site:

Date:

Location:

Contact:

Phone:

Source Transformer:

kVA: _____ Primary Voltage: _____ Secondary Voltage: _____

Taps: #1____; #2____; #3____; #4____; #5____; #6____; #7____; #8____

Tap Position: _____

Measured Voltages and Currents:

Primary Voltage	Primary Current
A-B _____	A _____
B-C _____	B _____
C-A _____	C _____
Phase Rotation: _____	G _____

Secondary Voltage		Secondary Current
A-B _____	A-N _____	A _____
B-C _____	B-N _____	B _____
C-A _____	C-N _____	C _____
Phase Rotation: _____		N _____
N-G Bonded? Yes _____	No _____	G _____

Remarks

Figure 6-1(a)—Sample set of forms

 Copyright © 2006 IEEE. All rights reserved.

Data Summary: Power Distribution and Grounding

Location: Date:

Panel: Room: User:

Power Source:

Panel Description:

Manufacturer: Model:

Total Poles: Amperes:

Main Disc: Y _____ N _____ Amperes:

Total Branch Circuits: 1 Pole _____ 2 Pole _____ 3 Pole _____

Feeder Description:

Phase Conductors: Size _____ Color _____ Copper: Y ____ N ____

Neutral Conductor: Size _____ Color _____ Copper: Y ____ N ____

Ground Conductor: Size _____ Color _____ Copper: Y ____ N ____

Neutral Bus:

Isolated Neutral Bus Installed?	Y	N
Total Number of Neutral Conductors?	_____	

Ground Bus:

Isolated Ground Bus Installed?	Y	N
Insulated Main Grounding Conductor?	Y	N
Conduit Main Grounding Conductor?	Y	N
Secondary Grounding Conductor?	Y	N
Total Number of Ground Conductors?	_____	

Panel Status:

Minimum NEC Working Clearance?	Y	N
Branch Circuits Correctly Labeled?	Y	N
Panel Name and Feeder Displayed?	Y	N
Panel Hardware Working Correctly?	Y	N
All Wiring Freely Accessible?	Y	N
Abandoned Wiring in Panel?	Y	N
All Connections Checked and Tight?	Y	N

Figure 6-1(b)—Sample set of forms (continued)

Copyright © 2006 IEEE. All rights reserved.

Data Summary: Power Distribution and Grounding		
Location:		Date:
Panel:	Room:	
Voltage Readings:	A to B	A to N
	B to C	B to N
	C to A	C to N
	N to G	N to IG
Current Readings:	Ph. A	Neutral
	Ph. B	Isol Gnd
	Ph. C	Ground
	Phase Rotation:	
Ground Impedance:	Neutral Impedance:	
Remarks:		

Figure 6-1(c)—Sample set of forms (continued)

 Copyright © 2006 IEEE. All rights reserved.

Data Summary: Power Distribution and Grounding

Location: Date:

Panel: Room:

Branch Circuit Loads

Po	CB Size	Load	Po	CB Size	Load
1			2		
3			4		
5			6		
7			8		
9			10		
11			12		
13			14		
15			16		
17			18		
19			20		
21			22		
23			24		
25			26		
27			28		
29			30		
31			32		
33			34		
35			36		
37			38		
39			40		
41			42		

Remarks:

Figure 6-1(d)—Sample set of forms (continued)

Copyright © 2006 IEEE. All rights reserved.

Data Summary: Power Distribution and Grounding

Location: Date:

Panel: Room:

Branch Circuit Tests

Circuit #	Voltage	Wiring	N/G Short	Ground Z	Neutral Z

Figure 6-1(e)—Sample set of forms (continued)

6.4.1.3.1 One-line diagram

A complete and up-to-date one-line diagram of the premises wiring and grounding system is extremely useful in helping to analyze the system. If a one-line diagram does not exist, one should be developed. This can allow the survey team to correctly identify the relevant power distribution for the problem area and can make the problem-solving process less tedious.

6.4.1.3.2 Visual media

Photographs and video-camera recordings can enhance a written report and show exposed problem areas as they appeared during the course of the survey. It can be especially useful where litigation between involved

 Copyright © 2006 IEEE. All rights reserved.

parties is concerned, and it can also be used as a base product to reveal whether or not recommended changes have been implemented. Furthermore, it can become a valuable training tool to show "before" and "after" conditions of a power quality survey.

6.4.2 Quality of ac voltage and current

Upon completion of the power distribution and grounding verification portion of the site analysis, the next step is to determine the quality of the power being delivered to the equipment having problems. This would include analysis of the waveforms for voltage and current. Various studies (see Allen and Segall [B1]; Dorr [B5]; Goldstein and Speranza [B6]; Hughes [B7]; Key [B9]; Kleronomos [B10]; Lim [B11]; and Sabin et al. [B15]) have been conducted to quantify the types and frequency of occurrence of power line disturbances on circuits supplying electronic equipment. Generally, voltage disturbances as recorded by power line monitors can be classified into the basic groups shown in Chapter 3.

6.4.2.1 Detection of voltage disturbances

Subclauses 6.4.2.2 through 6.4.2.6 discuss the methods of detection for the various types of voltage disturbances included in Chapter 3. Recommendations for correction of these disturbances are covered in Chapter 8. A recommended practice is to periodically connect the power monitor to a disturbance generator and create known disturbances. Other recommended practices to aid in the installation of power line analyzers and interpretation of disturbance data are presented in IEEE Std 1159™.

6.4.2.2 Power monitor connections

Hookup of the monitor is an important consideration. Today's available technology allows the user to monitor both ac voltage and current waveforms. This would provide for a more complete analysis of the power distribution to correlate disturbances with equipment use. For example, if current levels increase substantially when voltage disturbances occur, the most probable cause for the voltage disturbance is the loads downstream from the monitoring point. If multiple channels are available, they should all be used to maximize the data obtained, enabling improved analysis of the number and the types of disturbances that have occurred. This analysis can then be applied toward the correct selection of power conditioning equipment to eliminate the problems. Figure 6-2, Figure 6-3, and Figure 6-4 illustrate suggested hookups for various power systems.

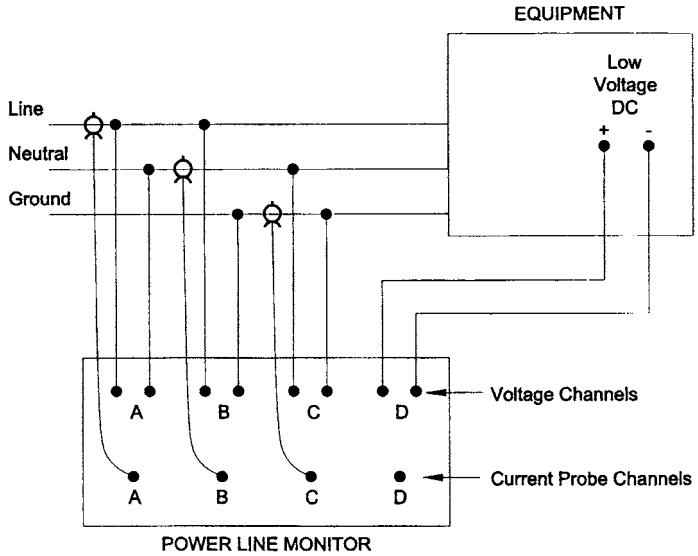

Figure 6-2—Recommended power monitor hookup procedure for single-phase applications

Copyright © 2006 IEEE. All rights reserved.

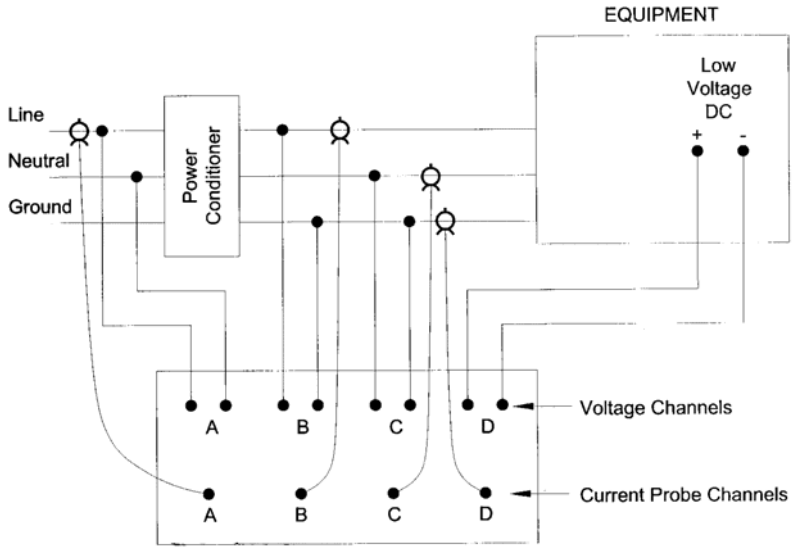

Figure 6-3—Recommended power monitor hookup procedure for single-phase applications with power conditioner

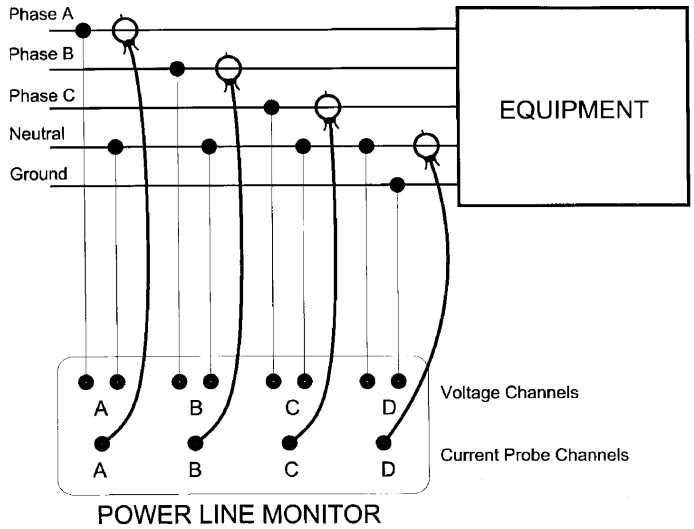

Figure 6-4—Recommended power monitor hookup procedure for three-phase wye applications

A technique that can be used to determine what, if any, effect disturbances have on equip-ment is to connect the dc channel of the monitor directly to the output of the equipment power supply. Events detected by the dc channel can then be correlated to events detected by the input ac channels in determining the level of the disturbance in the logic circuits.

WARNING

When connecting the monitor to a power panel, always use a qualified person to make the connections. The person shall ensure that the connections are made safely and will remain secure for the duration of the monitoring period.

 Copyright © 2006 IEEE. All rights reserved.

6.4.2.2.1 Monitor input power

Recommended practice is to provide input power to the monitor from a circuit other than the circuit to be monitored. Some manufacturers might include input filters or TVSSs on their power supplies that can alter disturbance data if the monitor is powered from the same circuit that is being monitored. If the separation of the power line monitor input power and the circuit being monitored cannot be maintained, then it may become necessary to supply the monitor with a properly sized, plug-in type isolation transformer in order to separate the two connections. In some cases, the power monitor can be powered from a dc power supply and thus eliminate the need for alternative methods by which to connect the monitor.

6.4.2.2.2 Monitor grounding

Care should be used in the grounding of the monitor. Since a monitor chassis ground may be provided through the ac input power cord, any monitor chassis ground connections to the circuit being monitored can create ground loops that result in additional noise being injected on the sensitive equipment feeder. To avoid this problem, it is recommended that no monitor chassis ground connection be made to the circuit being monitored. The instrument manufacturer should be contacted for guidance as required. Where a dc power supply is used to power the monitor, or a ground connection does not exist through the power cord, then a grounding connection should be made to the power monitor's chassis ground terminal.

6.4.2.2.3 Monitor placement

A power line monitor should be placed in a secured area that can allow the safe connection of the power monitor sense leads and the prevention of physical injury to nearby persons who may travel through the area. Locating the power monitor in an area that is safe and secure may reduce the possibility of physical damage to the monitor and ensure that connections cannot become loose, and that monitor settings are not disturbed.

Care should be given as to the environment the power monitor is expected to operate. As with many microprocessor-based devices, a power line monitor has limitations regarding temperature, humidity, dust, dirt, contaminants, and other environmental parameters. For example, low humidity levels within the area of the power line monitor increases its susceptibility to ESD. Mechanical shock and vibration should also be taken into account when setting up the monitor. Some monitors are not designed for outdoor use and should be in a protective covering.

Vibration of the monitor or the circuit being monitored can weaken connections and result in meaningless data generation. The power monitor should also be inspected prior to hookup to the power distribution system to inspect for any damage that may have been incurred during transportation of the instrument. Any obvious physical damage to the outside packaging or frame of the monitor during transportation to the site should alert the user to possible internal damage to the instrument. It is recommended that the user verify proper equipment operation prior to use under these conditions.

Certain levels of RFI can also be introduced through the monitor sense leads or the power monitor itself and could cause erroneous data to be produced. Therefore, some shielding for the monitor under these circumstances may be necessary.

6.4.2.2.4 Quality of monitoring sense lead connections

The connection of the power monitor sense leads should be connected in a manner that does not violate the power monitor manufacturer's recommendations for monitoring voltage and current. Other recommended practices for monitor sense lead connections include the following:

a) Have a qualified person assist in the connection of the monitor to a switchboard, panelboard, transformer, and other electrical apparatus that have exposed electrical connections.

Copyright © 2006 IEEE. All rights reserved.

b) Review connections with the power monitors equipment manufacturer's manual and/or with an experienced person to verify safe and proper lead hookup.

c) Reduce the use of jumper wires between channels and provide two wires per channel to minimize EMI/RFI coupling created from a disturbance on another channel. It may also become necessary to twist the sense leads for each channel and route along the grounded equipment enclosure chassis to reduce the EMI/RFI effects.

d) Make hard-wired power monitor connections to switchboards, panelboards, and transformers where the monitoring period may extend for an indefinite period of time. This could prevent monitor connections from being accidentally removed by unauthorized personnel.

Sense lead cables for power monitors can range in construction for a variety of applications (e.g., "alligator" clips and "buttonhook" connectors). When concerned with equipment-operator safety, a fused clip lead is available from some monitor equipment manufacturers. Although these connections are properly constructed for safety, the weight of the sense lead cable can cause it to be separated from the fused clip, thus opening up the conductive path to the monitor channel input.

6.4.2.3 AC current monitoring

Simultaneous voltage and current measurements with power line monitors should be made where possible. This configuration would be useful to correlate equipment startup or opera-tion with voltage disturbances. Clamp-on current transformers (CTs) must be verified as having a quality connection to the monitor. It should also be investigated that the split core ends of the CT are cleaned of any dirt or other contaminants that would otherwise compromise the validity of the current measurement.

To further decrease accuracy errors, it is recommended that the conductor or bus bar that is being measured be positioned as close as possible to the center of the clamped area. It is also recommended that the user verify that no return conductors for the circuit being measured are contained within the same CT. This may result in a partial or total cancellation of the magnetic fields and can prevent the monitor from displaying accurate current measurements. Further-more, the user should verify that the correct polarity exists for the CTs. Incorrect polarity could mislead the user as to the origin of the current impulse.

6.4.2.4 Setting monitor thresholds

It is important to understand how the monitoring instrument being utilized gathers its information. The variety of instruments that are commercially available differ in their data capture techniques. For example, certain power monitors do not require any setting of the thresholds but instead plot the captured events on preprogrammed graphs. The differences in these techniques (such as how rms voltage is determined, sample rate, method of capturing and recording transients, and method of calculating harmonic distortion) should be understood to ensure that the appropriate instrument is selected. This would help maintain that proper settings or thresholds are programmed so that meaningful data are obtained. The instrument manufacturers' instructions should be consulted to determine the appropriate method of programming the monitor for the application in which it is being used.

In situations where little is known about the electrical environment in which the power monitoring is taking place, it may be helpful to use the "summary mode" of the instrument to characterize the environment over a 24 h period prior to gathering detailed disturbance data.

Once the hookup of the monitor has been determined, the next step is the selection of thresholds at which disturbances will be recorded. The thresholds shown in Table 6-2 can be used as a guideline in setting up the power line monitor in most single-phase and three-phase configurations. The actual thresholds set by the user would depend on the threshold of the equipment experiencing problems as well as the parameters of the electrical system.

 Copyright © 2006 IEEE. All rights reserved.

Table 6-2—General equipment tolerances to assist in data capture methods

Phase voltage thresholds	
Sag	–10% of nominal supply voltage
Swell	+5% of nominal supply voltage
Transient	Approximately 100 V over the nominal phase-neutral voltage
High-frequency noise	Approximately 1% of the phase-neutral voltage
Harmonics	5% THD—The voltage distortion level at which loads may be affected.
Frequency	±0.5 Hz
Phase unbalance	Voltage unbalance greater than 1%
Neutral-ground voltage thresholds	
Swell	1% to 2.5% of nominal phase-neutral supply voltage
Impulsive	50% of nominal phase-neutral voltage
Noise	Typical equipment susceptibility can vary—Consult operating specifications for the affected equipment.

In the varying levels of electrical environments that can be experienced through power quality investigations, some of the guidelines may not apply. It is important to review the performance specifications of the affected equipment before blindly setting up the monitor. If these specifications are available, then it would make the recommended threshold settings more specific to the equipment and its environment. For example, high and low thresholds should be set slightly within the voltage operating limits of the equipment. This should permit detection of voltage levels close to the critical maximum or minimum voltage limits that can result in equipment overstress or failures. If equipment tolerance limits are unknown, a high thresh-old of 126 V, and a low threshold of 108 V, is recommended for monitoring 120 V circuits.

Transient thresholds should be set to detect transients that cause component degradation or destruction. If no equipment transient limits are specified, a threshold of approximately 100 V_{peak} could be used. If the monitor has high-frequency noise detection, a threshold of 2 to 3 V_{peak} should be used for detection of high-frequency noise between neutral and ground.

Information such as the site, name, date, circuit being monitored, hookup scheme, and other related data, should be recorded at the beginning of the data printout to facilitate future reference to the data. Some monitors have the ability to be accessed via an RS-232 port or modem connection by a remote terminal or computer. This feature can be very helpful in the output of data, changing thresholds, and performing other functions on several monitors in the field from a single terminal in the office.

6.4.2.5 Monitor location and duration

When monitoring a site that is serving several loads, it may be advantageous to initially install the monitor at the power panel feeding the system to obtain an overall profile of the voltage. The monitor can then be relocated to the circuits serving individual loads, such as central processing units (CPUs), disk drives, or other such loads that are experiencing malfunctions and failures. Comparison of disturbance data can provide clues as to the source of the disturbances and how to most effectively remedy the problem. It is generally recommended that the minimum monitoring period include at least one full work cycle, which would normally be 7 or 8 days. Longer monitoring periods are often needed to record disturbances that occur on a random or seasonal basis.

Copyright © 2006 IEEE. All rights reserved.

6.4.2.6 Analysis of recorded voltage disturbances

Perhaps the most difficult task in conducting a site power survey is the analysis of the data provided by the power monitor. These data will be used in determining the source of the disturbances as well as making decisions on cost-effective methods for correction or elimination of the disturbances.

The individual responsible for the interpretation of data should have a thorough understanding of the disturbance capture and reporting characteristics of the specific monitor used in the site survey to minimize the possibility of misinterpretation. One of the factors to be determined is whether a particular disturbance is causing an equipment malfunction. This relationship is relatively easy to determine if an equipment malfunction occurred at the same time the disturbance was recorded.

In many cases, disturbances are recorded and appear to have no effect on equipment performance. These disturbances could still be severe enough to cause degradation of components that eventually result in premature failure. Part of the data analysis is a determination of the source of the disturbances, which can prove to be a very elusive task. Disturbances can be caused by the equipment itself, by other equipment within the facility, by equipment external to the facility, by power utility operations, by lightning, or any combination of these sources. Although a complete description is not possible in this recommended practice, some general guidelines can be helpful.

If the equipment is supplied by an isolation transformer or a power conditioner, and disturbances are recorded on the output of the conditioner only, then the conditioner or the equipment itself may be the source.

Compare disturbances on the dc output of the power supply to events on the ac input to the equipment. If no time correlation can be made, the events on the dc channel could be originating at an external device and being reflected into the system by the data or communication cables. If disturbances are occurring about the same time during the working day, try to determine what equipment is being operated in the facility at those times. If no correlation can be obtained, then the source may be external to the facility.

Disturbances that occur at exactly the same time each day are caused by equipment that is time clock controlled. One such type of equipment is a switched capacitor bank used by power utilities. Contacting the power utility company to determine what operations are being conducted on their system, which supplies power to the facility at various times of the day, can often provide helpful information.

6.4.3 Electronic equipment environment

Electronic equipment malfunctions and failures can be caused by improper environmental parameters such as temperature, humidity, EMI, and ESD. A site survey should include testing or monitoring of these parameters to confirm a proper environment for the equipment.

6.4.3.1 Temperature/humidity

Some monitors that are used to measure voltage disturbances have transducers available to measure temperature and humidity. Once the temperature and humidity specifications from the equipment manufacturer have been obtained, set the high- and low-threshold points slightly within those limits in order to capture variations that are close to the limits of the electronic equipment. Recommended practice is to program the monitors so that long-term (12 or 24 h) reports of temperature and humidity levels are documented. Compare any sudden changes in temperature and humidity to the site error logs to see if any correlation can be made. High levels of temperature can cause overheating and premature failure of components. High humidity can cause condensation resulting in intermittent contacts on circuit boards. Low humidity can be a contributing factor to causing increased levels of ESD.

 Copyright © 2006 IEEE. All rights reserved.

6.4.3.2 EMI and RFI

Radiated EMI and RFI can impact the performance of electronic equipment. In attempting to confirm whether the problem is EMI, the first step is to establish the method of site operations. Are any transmitters or other communication devices being operated near the electronic equipment? Can correlation be made between the radio operation and equipment malfunctions? A visual inspection of the surrounding area can be conducted looking for external sources of EMI such as radio/TV towers, microwave towers, and airports.

Generally, two levels of EMI measurements can be conducted. The first is measurement of high-frequency fields using a field strength meter or EMI transducer coupled to a power monitor. This technique is recommended as a preliminary step to either confirm or eliminate EMI as a problem. Consult the electronic equipment manufacturer for the equipment susceptibility limits. If excessive levels of radiated fields are indicated, recommended practice is to conduct a complete EMI survey using a spectrum analyzer, which is the second level of EMI measurement. This survey is intended to pinpoint the frequency and direction of the signal source so that corrective measures can be taken.

Cable sheath currents at radio frequencies can be measured with a wideband CT similar to a clamp on meter coil. There are units available with bandwidths that are flat from 50 kHz to over 100 MHz. The transfer ratio is 1:1 when properly terminated. The output when connected to an oscilloscope or a spectrum analyzer can indicate levels in volts, which is the same as amperes with the 1:1 correspondence.

A current level of up to 7 mA (rms) at a radio frequency (normally in the broadcast band) should not give any trouble to electronic equipment. Levels up to 15 mA or higher probably will cause problems and might require EMI filters. Higher levels require filters and higher degrees of shielding depending on the shielding designed into the equipment. Recommended corrective measures for EMI problems include the following:

a) Reorienting or relocating the sensitive equipment or source

b) Removal of the source

c) Shielding of the source or affected equipment

6.4.3.3 Electrostatic discharge

ESD can severely impact the performance and reliability of electronic equipment. A site can experience failures from ESD and not immediately be aware of the problem since voltage levels that can cause component failure are below the perception threshold of the individual. Meters are available to measure the level of static charge on personnel and equipment. Recommended practice is to measure static charge on personnel, furniture, and other such items located in the vicinity where the sensitive equipment is being operated. If equipment failures are caused by ESD, recommended corrective measures include the following:

a) Maintaining proper humidity levels in the equipment areas

b) Using antistatic wrist straps and mats on floor and work surfaces

c) Replacing static-generating items, such as chairs, and styrofoam and plastic cups, that aggravate the ESD problem

d) Training operating personnel to discharge themselves before operating the sensitive equipment

6.5 Harmonic current and voltage measurements

Currents generated by nonlinear loads should be investigated to determine what adverse affects they may have for the premises wiring system. Test procedures and acceptable limits for harmonic distortion should conform to IEEE Std 519™.

Copyright © 2006 IEEE. All rights reserved.

6.5.1 Harmonic measurement instruments

Many instruments can be used to measure the extent of harmonic currents and steady-state ac voltage waveform distortion. These meters may present their results via graphic display or as statistical data on printed strip charts. Some examples of meters used to make harmonic measurements on the power system are oscilloscopes, true rms voltmeters and clamp-on ammeters, spectrum analyzers, harmonic analyzers, and power line monitors.

It is recommended that the user follow the test equipment manufacturer's guidelines when connecting the meter to the premises wiring system to prevent a safety hazard and to assist in gathering meaningful data. The recommended instruments needed to perform these measure-ments are discussed in Chapter 5.

6.5.2 Harmonic measurement location

Harmonic measurements can be made at many locations throughout the premises wiring system. Harmonic voltage and current measurements can be made at the service entrance of the facility to reveal the overall harmonic content of the currents and voltages for the premises wiring system. Measurements can also be made at specific locations of the power system (i.e., secondaries of isolation transformers, feeder or branch circuit panels, equipment locations, etc.) to determine their contribution to the overall harmonic content of the facility.

6.5.3 Harmonic measurement techniques

The key to gathering meaningful harmonic data is understanding the issues that precede an investigation. Harmonic distortion of the voltage is a primary concern for disturbance-type problems and compliance with specifications where a device is experiencing control difficulties. Distortion of the current is the primary concern in transformer and premises wiring overheating problems and can also be an issue for compliance to specifications. Some common examples are as follows.

— *IEEE 519 compliance.* Measure the voltage and current at the "point of common coupling" (PCC), which is usually the service entrance.

— *Premises wiring overloads.* Measure the current distortion at the distribution panels, paying particular attention to the neutral current. Check the current distortion of interconnecting wiring in any modular furniture.

— *Transformer overheating.* Measure the transformer's secondary current distortion. This could provide a better indication of the harmonic distortion than the line cur-rents in the primary.

— *Equipment compliance to specification requirements.* Measure voltage and current distortion as required by the specifications. For a variable-frequency speed drive, it will normally be the input to the drive. The specifications for a uninterruptible power supply (UPS) may require specific input and output distortion levels.

6.6 Applying data to select cost-effective solutions

Upon completion of the field testing and power monitoring portion of the site survey, it is recommended that all data be classified into distinct categories before analysis. This can assist in defining problem sources as well as identifying means of correction.

For example, a high-impedance neutral conductor on the incoming feeder to a power panel may be the cause of common-mode noise that is being reflected into the entire system. Since distribution and grounding problems are mechanical (loose), missing, or improper connections, the means of effective correction is also mechanical (a screwdriver). It is recommended that problems found in the power distribution and grounding system be corrected before attempting correction of problems in the quality of ac voltage. These distribution

 Copyright © 2006 IEEE. All rights reserved.

problems can normally be remedied at minimal cost and, in some cases, may be the only correction needed to assure a high degree of system performance and reliability.

Careful analysis of the power monitoring data is necessary to determine the types, quantity, and severity of the disturbances recorded, as well as the immediate or long-term impact on equipment performance and reliability. It is this data that may form the basis for making decisions about what type of power conditioning equipment should be required to eliminate the problem. A discussion of the various types and applications of power conditioning equipment is provided in Chapter 7.

6.7 Long-term power monitoring

Studies have been conducted using power monitors to determine the quantities and types of disturbances that occur over an extended period of time (see Allen and Segall [B1], [B2]; Dorr [B5]; Goldstein and Speranza [B6]; Hughes [B7]; Key [B9]; Martzloff and Gruzs [B12]; and Sabin et al. [B15]).

Although these studies can provide some helpful information, caution should be exercised in applying this information to correct problems at any given site. Numerous variables enter into the equation that determine the types and quantities of voltage problems occurring on any given site utilizing electronic loading equipment. They include the following:

a) Type and configuration of the electronic system installed (e.g., data processing, telecommunications, process measurement and control, and point-of-sale terminals)
b) Configuration and condition of the premises wiring and grounding system supplying the equipment
c) Quantity, location, and type of power protection equipment installed
d) Other equipment operating from the premises wiring system in the facility
e) Location of the facility on the utility power system
f) Other facilities in the immediate area served from the same power utility system
g) Geographic location of the facility (exposure to lightning)

6.8 Conclusions

Conducting a site power analysis or site survey can be an effective means of detecting and correcting power-related problems if it is properly applied. A systematic approach to investigating power quality problems is an essential prerequisite to providing cost-effective solutions. One possible procedure to resolve power quality problems is illustrated in Figure 6-5 (see Lim [B11]). Careful testing and troubleshooting techniques are necessary to collect meaningful power quality data. Classification and thorough analysis of all data must be conducted in order to define the problem areas.

Copyright © 2006 IEEE. All rights reserved.

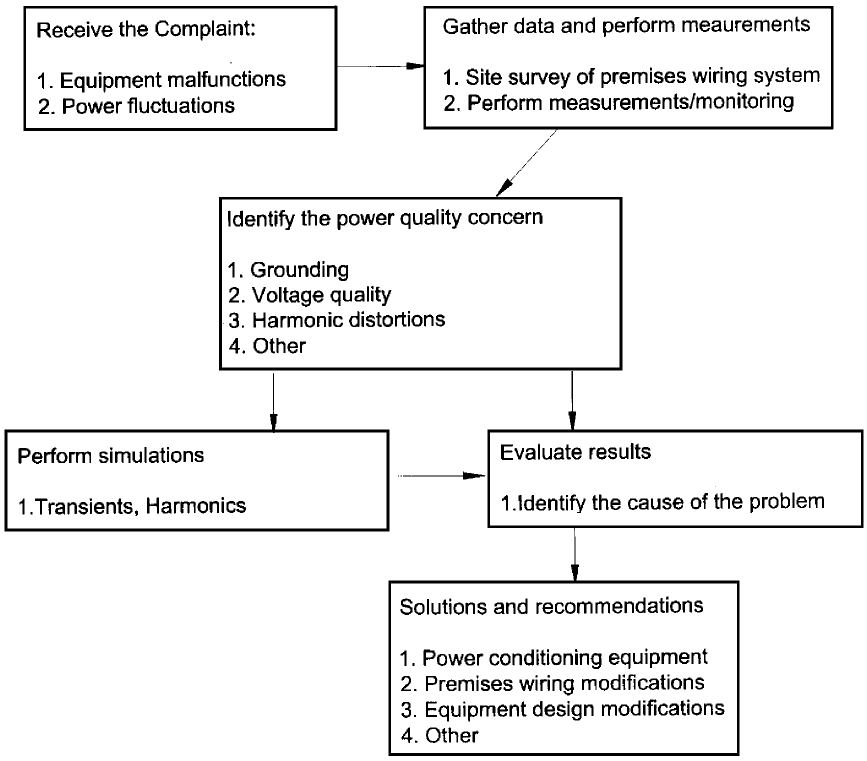

Figure 6-5—Systematic procedure for resolution of power quality complaints

6.9 Normative references

The following referenced documents are indispensable for the application of this recommended practice. For dated references, only the edition cited applies. For undated references, the latest edition of the referenced document (including any amendments or corrigenda) applies.

IEEE Std 519, IEEE Recommended Practices and Requirements for Harmonic Control in Electrical Power Systems.[3,4]

IEEE Std 1159, IEEE Recommended Practice on Monitoring Electrical Power Quality.

NFPA 70, 2005 Edition, National Electrical Code® (NEC®).[5]

[3]IEEE publications are available from the Institute of Electrical and Electronics Engineers, Inc., 445 Hoes Lane, Piscataway, NJ 08854, USA (http://standards.ieee.org/).

[4]The IEEE standards or products referred to in this subclause are trademarks of the Institute of Electrical and Electronics Engineers, Inc.

[5]The NEC is published by the National Fire Protection Association, Batterymarch Park, Quincy, MA 02269, USA (http://www.nfpa.org). Copies are also available from the Institute of Electrical and Electronics Engineers, Inc., 445 Hoes Lane, Piscataway, NJ 08854, USA (http://standards.ieee.org/).

 Copyright © 2006 IEEE. All rights reserved.

6.10 Bibliography

Additional information may be found in the following sources:

[B1] Allen, G. W., and Segall, D., "Impact of Utility Distribution Systems on Power Line Disturbances," IEEE Summer Power Meeting Conference Paper, SUMPWR-76, A76-338-4, 1976 (abstract in *IEEE Transactions on PAS,* vol. PAS-95, pp. 1760–1761, Nov./Dec. 1976).

[B2] Allen, G. W., and Segall, D., "Monitoring of Computer Installations for Power Line Disturbances," IEEE Winter Power Meeting Conference Paper, WINPWR C74 199-6, 1974 (abstract in *IEEE Transactions on PAS,* vol. PAS-93, p. 1023, July/Aug. 1974).

[B3] CFR Title 29, Labor—Part 1910, Occupational Safety and Health Standards (OSHA).[6]

[B4] CFR Title 29, Labor—Part 1926, Safety and Health Regulations for Construction (OSHA).

[B5] Dorr, D., "Point of Utilization Power Quality Study Results," *IEEE Transactions on Industry Applications,* vol. 31, no. 4, July/Aug. 1995.

[B6] Goldstein, M., and Speranza, P. D., "The Quality of U.S. Commercial AC Power," *IEEE International Telecommunications Energy Conference (INTELEC),* pp. 28–33 [CH1818-4], 1982.

[B7] Hughes, M.B., "Canadian National Power Quality Survey," *Proceedings of EPRI PQA '95,* New York, NY, May 9–11, 1995.

[B8] IEEE Std 81-1983, IEEE Guide for Measuring Earth Resistivity, Ground Impedance, and Earth Surface Potentials of a Ground System—Part 1: Normal Measurements.

[B9] Key, T. S., "Diagnosing Power Quality Related Computer Problems," *IEEE Transactions on Industry Applications,* vol. IA-15, no. 4, July/Aug. 1979.

[B10] Kleronomos, Chris C., and Cantwell, Edward C., "A Practical Approach to Establish Effective Grounding for Personnel Protection," *IEEE Industrial and Commercial Power Systems Technical Conference (I &CPS),* pp. 49–57 [CH1460-5], 1979.

[B11] Lim, Philip K., "Systematic Approach to Resolve Power Quality Complaints," Memphis State University, Dec. 1993.

[B12] Martzloff, F. D., and Gruzs, T. M., "Power Quality Surveys: Facts, Fictions, and Fallacies," *IEEE Transactions on Industry Applications,* vol. 24, no. 6, pp. 1005–1018, Nov./Dec. 1988.

[B13] Michaels, Kenneth M., "Earth Ground Resistance Testing for Low Voltage Power Systems," *IEEE Transactions on Industry Applications,* vol. 31, no. 1, pp. 206–213, Jan./Feb. 1995.

[B14] NFPA 70E-2004, Standard for Electric Safety in the Workplace.[7]

[B15] Sabin, D. D., Lamoree, J. D., and Sundaram, A. "Final Results from the EPRI Distribution Power Quality Monitoring Project and New Power Quality Monitoring Tools," *Power Quality '98/Power Value'98 Proceedings,* pp. 241–251, Santa Clara, California, Nov. 1998.

[6]CFR publications are available from the Superintendent of Documents, U.S. Government Printing Office, P.O. Box 37082, Washington, DC 20013-7082, USA (http://www.access.gpo.gov/).

[7]NFPA publications are available from Publications Sales, National Fire Protection Association, 1 Batterymarch Park, P.O. Box 9101, Quincy, MA 02269-9101, USA (http://www.nfpa.org/).

Copyright © 2006 IEEE. All rights reserved.

Chapter 7
Specification and selection of equipment and materials

7.1 Introduction

This chapter describes the many types of power correction devices that accept electrical power in whatever form it is available and modify the power to improve the quality or reliability required for electronic ac equipment. These devices perform functions such as the elimination of noise, change, or stabilization of voltage, frequency, and waveform.

The power handling and performance requirements vary depending upon each application. A wide variety of power correction products are available that utilize a range of technologies and provide different degrees of protection to the connected load. The requirements of the application need to be understood, and then a cost-effective solution applied using one or more of the available products.

The job of selecting the appropriate power correction device is fairly straightforward when it powers a single load. The requirements of only one load need to be considered. For larger systems that support many loads, the requirements of all loads need to be considered, as well as the potential interactions between them, to decide the appropriate enhancement equipment and system construction.

Prior to addressing the selection of power-enhancement equipment, the following should be considered:

a) *Is power quality really a problem?* Poor power quality is only one of many reasons for operational problems with critical loads. Examples of other problems that could interfere with proper operation of a critical load include: software and hardware troubles within the system, temperature and humidity beyond the limits of the critical load, electrostatic discharge (ESD), improper wiring and grounding, and operator errors. The power quality requirements of the load need to be known. Refer to Chapter 3 for several guidelines.

b) *What type of power disturbances are occurring?* To determine what type of conditioning is required, refer to Chapter 6 for guidelines on site power analysis. In addition to the present power quality profile, some anticipation of the future needs of quality and reliability of the power supply should be considered.

c) *What level of expenditure is justified to eliminate or mitigate the power-related problems?* Some estimate should be made of the costs associated with power disturbances. This includes the value of the loss of profits, hardware damage, lost data, lost productivity, and processing errors.

7.2 Commonly used power correction devices

Table 7-1 gives a summary description of the most commonly used power correction devices; Figure 7-1 shows a summary of performance features of various types of power correction devices.

Copyright © 2006 IEEE. All rights reserved.

Table 7-1—Summary of power correction devices

Device and principal functions	General description
Isolation transformers Attenuates common-mode disturbances on the power supply conductors. Provides a local ground reference point. With taps, allows compensation of steady-state voltage drop in feeders.	Transformer with physically different winding for primary and secondary. Often has single or multiple electrostatic shields to further reduce common-mode noise.
Noise filters Common or normal-mode noise reduction with attenuation and bandwidth varying with filter design.	Series inductors with parallel capacitors. Good for low-energy, high-frequency noise.
Passive harmonic filters Reduction in input current harmonics of nonlinear loads, which can cause heating of power conductors, transformers, motors, etc.	Series-resonant inductor/capacitor (LC) circuits that shunt harmonic currents and prevent them from being fed back to line. Parallel-resonant circuits to block the flow of harmonic currents, such as in the neutral of three-phase circuits.
Phase-shifting transformers	Zigzag and multiphase transformers designed to cancel particular orders of harmonic load currents.
Active harmonic filters Compensation of harmonic currents, primarily from nonlinear loads.	Electronic devices which sense harmonic currents and compensate for them to provide a harmonic-free current at its input.
Transient voltage surge suppression Divert surge currents or block surge voltages.	Various types of transient voltage surge suppression are available to limit circuit voltages. Devices vary by surge current-handling capability and voltage-limiting capability. Typical devices are “crowbar” types like air gaps and gas discharge tubes (GDTs); and nonlinear resistive types like thyrite valves, avalanche diodes, and metal-oxide varistors (MOVs). Also available are active suppressors that are able to clamp, or limit, surges regardless of where on the power sine wave the surges occur. These devices do not significantly affect energy consumption.
Voltage regulators Provide a relatively constant steady-state output voltage level for a range of input voltages.	A variety of voltage regulation techniques are utilized. Common techniques include ferroresonant transformers, electronic tap-switching transformers, and saturable reactor regulators.
Power line conditioners Most often a product providing both regulation and noise reduction. Some products provide multiple noise-reduction methods, e.g., transformer and filter, but no voltage regulation.	Shielded ferroresonant transformers (including voltage regulation) or shielded transformers with tap changers (including surge suppressors and noise filters).
Magnetic synthesizer Voltage regulation, common- and transverse-mode noise and surge attenuation and correction of voltage distortion.	Three-phase, ferroresonant-based device that generates an output voltage by combining pulses of multiple saturating transformers to form a regulated, stepped output voltage waveform.
Motor generators Voltage regulation, noise/surge elimination, and waveform correction for voltage distortion.	Most often two separate devices, a motor and an alternator (generator), interconnected by a shaft or other mechanical means.
Static transfer switches (STSs)	Very fast transfers between two independent power sources.

 Copyright © 2006 IEEE. All rights reserved.

Table 7-1—Summary of power correction devices *(continued)*

Device and principal functions	General description
Standby power systems (SPSs) Inverter and battery backup, operating as an outage protection system when normal power fails. In normal mode, the inverter is in a standby mode and the load is fed directly from the input power source.	An inverter to which the load is switched after a power supply failure is detected. There is some break in power when the transfer to and from input power occurs. Usually comprised of a solid-state inverter, battery, and small battery charger.
Uninterruptible power supplies (UPSs) Maintain uninterrupted supply of regulated voltage, wave shaping, and noise/surge suppression for a period of time after power failure.	A variety of technologies exist, including rotary and static UPS. A battery or other energy storage means is used as a source of energy during loss of input power.

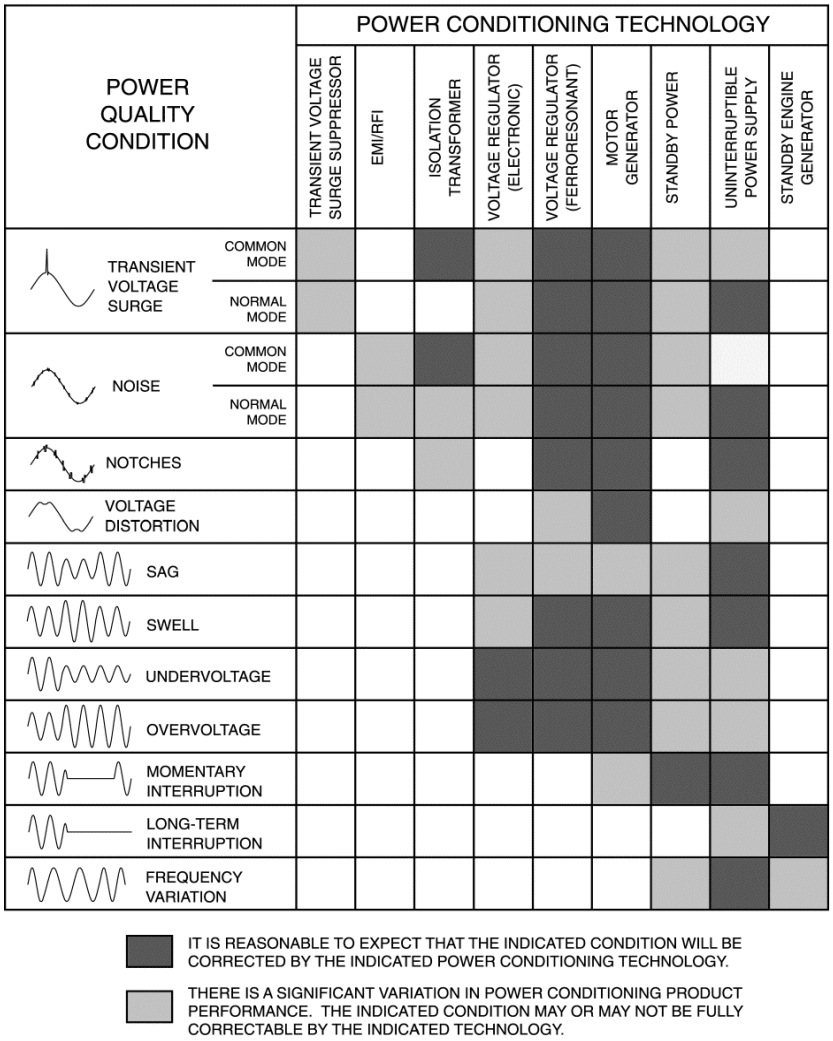

Figure 7-1—Summary of performance features for various types of power correction devices

Copyright © 2006 IEEE. All rights reserved.

7.2.1 Isolation transformers

Isolation transformers are one of the most widely used power correction devices. Figure 7-2 depicts the configuration of an isolation transformer. They incorporate separate primary (or input) and secondary (or output) windings. They provide for several functions. One is the ability to transform or change the input-to-output voltage level and/or to compensate for high or low steady-state voltage. In the U.S., 480 V is typically distributed to the point of use and then transformed to 120 V or 208 Y/120 V. Another function of the separate windings is to provide for establishing the power ground reference close to the point of use. This greatly reduces the problem of common-mode noise induced through "ground loops" or multiple-current paths in the ground circuit upstream of the established reference ground point (see Chapter 4). These passive devices introduce minimal current distortion onto the input source. In addition, they can reduce the triplen harmonic currents fed back to the source by single-phase nonlinear loads. When a delta primary, wye secondary isolation transformer is used to power a nonlinear load such as a rectifier, the balanced portion of the load triplen harmonic currents circulate and are cancelled in the delta primary so they are not seen by the power source (utility). Other positive and negative sequence harmonic currents are affected by the 30° fundamental frequency phase shift of the delta-wye transformer. For example, the 5th and 7th harmonic load currents are inverted, which can be beneficial in providing cancellation of these harmonic currents at the primary voltage level.

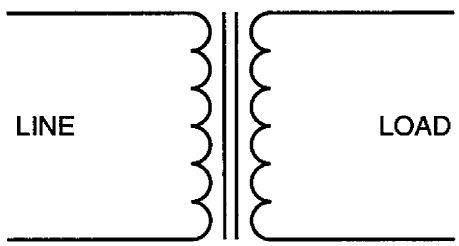

Figure 7-2—Isolation transformer

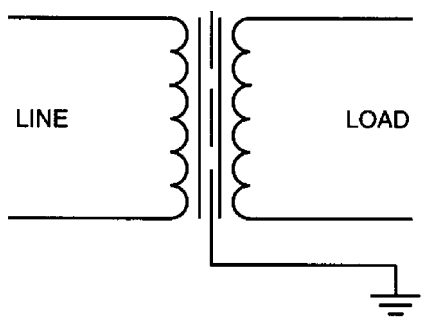

Figure 7-3—Shielded isolation transformer

For power conditioning purposes, isolation transformers should be equipped with electrostatic (Faraday) shields between the primary and secondary windings as shown in Figure 7-3. An electrostatic shield is a conducting sheet of nonmagnetic material (copper or aluminum) connected to ground that reduces the effect of interwinding capacitive coupling between primary and secondary windings and improves the isolation transformer's ability to isolate its load from the common-mode noise present on the input power source. Simple shielding adds little to the cost, size, or weight of the transformer.

Specialty conditioning transformers, referred to as *super isolation* or *ultra isolation* transformers, are equipped with additional shields around each winding to further reduce the capacitive coupling. This type of transformer is claimed to reduce the common-mode noise of certain frequencies by 140 dB or more. However, this is done at the expense of introducing additional transformer reactance with resultant degraded

 Copyright © 2006 IEEE. All rights reserved.

voltage regulation with load change and higher costs than that of the isolation transformers with single electrostatic shields. These transformers generally do not provide decoupling of the normal-mode disturbances, such as sags, swells, and surges.

Isolation transformers do not provide any line voltage regulation and, in fact, may cause some additional degradation of voltage regulation due to their series impedance. As was stated, shielding tends to adversely affect regulation. Isolation transformers tend to be quite efficient (95% to 98%) so they generate little heat and are relatively quiet. They can be obtained in enclosures that are suitable for installation in computer rooms.

Isolation transformers can be installed separately or with power distribution circuit breakers and monitoring circuits. Isolation transformers with distribution circuit breakers can be located near the critical load. This configuration provides for short power feeders and branch circuits, thus limiting susceptibility to coupled noise. Isolation transformers incorporated into packaged power distribution units (PDUs) often include additional noise and surge suppression, integral power distribution, monitoring, and flexible output cables that provide for simpler rearrangement of the load equipment.

7.2.2 Noise filters

Noise filters reduce conducted electromagnetic interference (EMI) and radio-frequency interference (RFI). Figure 7-4 shows a representation of one type of inductor/capacitor (LC) filter. Filters can be used to prevent interference from traveling into equipment from the power source as well as prevent equipment that generates interference from feeding it back into the power line. Most types of electronic equipment have some form of filters to limit the high-frequency noise, usually needed to comply with Federal Communications Commission (FCC) equipment emission limits.

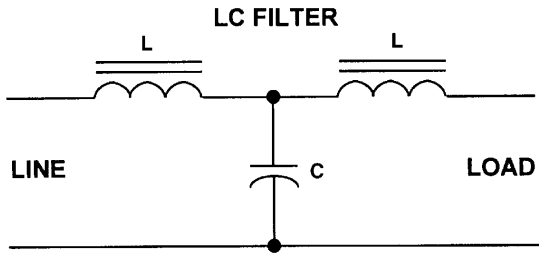

Figure 7-4—LC noise filter

The simplest form of filter is a “low pass” filter designed to pass 60 Hz voltage but to block the higher frequencies or steep wavefront surges. These devices contain series inductors followed by capacitors to ground. The inductor forms a low-impedance path for the 60 Hz utility power, but a high-impedance path to the high-frequency noise. The capacitor conducts the remaining high-frequency noise to ground before it reaches the load. RFI filters are not effective for frequencies near 60 Hz, such as low-order harmonics.

Filters can be connected line-to-line or line-to-neutral for rejection of normal-mode noise. They can also be connected line-to-neutral and line-to-ground or used in conjunction with a balun transformer to reduce common-mode noise between any of the conductors. Filters require careful application. If not used properly, they can cause a ringing effect that can be worse than the noise they were intended to filter. For this and other reasons, filters larger than simple RFI filters are seldom used as add-on line-conditioning devices.

7.2.3 Harmonic current solutions

A number of alternative methods have been employed to reduce or control harmonic currents. Methods include passive harmonic filters, transformer-based solutions, and active harmonic filters.

Copyright © 2006 IEEE. All rights reserved.

7.2.3.1 Passive harmonic current filters

Passive harmonic current filters are used to prevent the harmonic currents of nonlinear loads from being fed back into the power source where they cause heating of conductors and transformers and corresponding voltage distortion. Passive filters contain only inductors, capacitors, and resistors. Two types of passive harmonic current filters are parallel-connected series-resonant filters and series-connected parallel-resonant filters. A typical series-resonant filter is shown in Figure 7-5. The filter is placed in parallel with the load, and the filter is tuned for the lowest predominant harmonic frequency generated by the load or observed in the power system. Often, a series inductor is inserted ahead of the filter to detune the filter from the upstream harmonic sources. These filters can be very effective at reducing the harmonic currents at their source and eliminating the need for other changes to compensate for the problems caused by the harmonic currents. For diode rectifier nonlinear loads, there are significant levels of harmonic currents without any appreciable fundamental reactive power (VARs). A potential disadvantage of passive series-resonant harmonic filters in this case is the leading power factor due to the fundamental VARs of the filter's capacitors. For changing loads, a stepped filter can be obtained that switches in and out the requisite number of filter steps as the load increases or decreases.

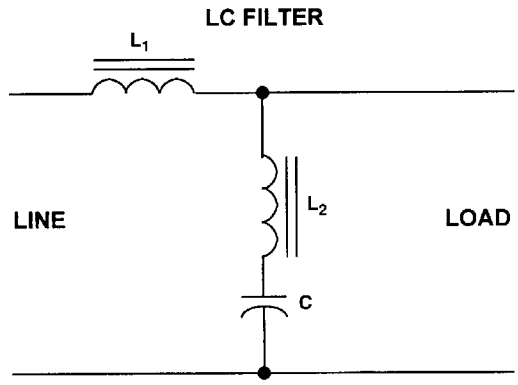

Figure 7-5—Series-resonant harmonic current filter

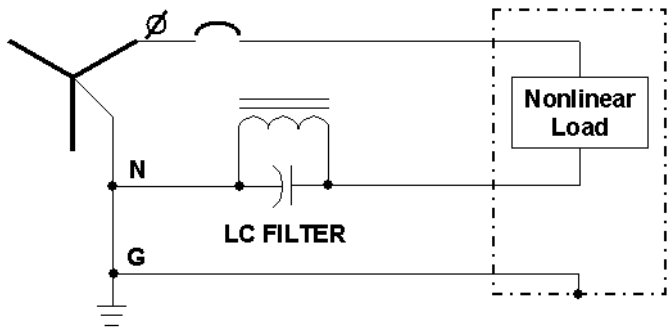

Figure 7-6—Parallel-resonant harmonic current filter applied to block triplen harmonic current flow

Series-connected parallel-resonant harmonic current filters have been applied to control the flow of harmonic currents by intentionally inserting a high impedance at the target harmonic current frequency. Figure 7-6 depicts a parallel-resonant filter in a typical application where the parallel-resonant filter is tuned to the 3rd harmonic to block the flow of triplen harmonic neutral current in three-phase power systems. The parallel-resonant filter has a high impedance at the 3rd harmonic yet maintains a low impedance at fundamental (power) frequency. When placed in series with the neutral wire, the filter opposes 3rd harmonic current flow and prevents high neutral currents from appearing in the power system. The filter eliminates the need for oversized neutral wires to handle the combined triplen currents from the phases, and standard

 Copyright © 2006 IEEE. All rights reserved.

wiring practices can be used. A potential disadvantage of the series-connected parallel-resonant filter is the resulting increased levels of voltage distortion observed on the load side of the filter.

7.2.3.2 Transformer-based harmonic current reduction

Three basic types of transformers applied to reduce harmonic currents are delta-wye isolation transformers, zigzag autotransformers, and phase-shifting, multi-winding transformers. Delta-wye isolation transformers, which are in widespread use as three-phase power distribution transformers, provide cancellation of the triplen harmonic load currents as they circulate in the delta primary windings. Additionally, the 30° input-to-output phase shift of delta-wye transformers can be used to cancel 5th and 7th order harmonic currents in the primary power circuit as these harmonic currents are inverted by the delta-wye windings and these inverted harmonic currents can be used to cancel other (noninverted) harmonic load currents.

Zigzag transformers, sometimes called *zero-sequence* transformers, are used to control the flow of triplen harmonic currents, diverting them from overloaded feeders or distribution transformers. Figure 7-7 shows a typical zigzag transformer application. The transformer is, connected in parallel to the three-phase and neutral wires, providing a low-impedance path to triplen harmonics. The triplen harmonic currents are shunted through the zigzag transformer and thus diverted away from the input feeder or supply transformer. However, triplen harmonic currents continue to flow in all the wires downstream of the zigzag transformer, and doubled neutrals or other harmonic current coping means are still required.

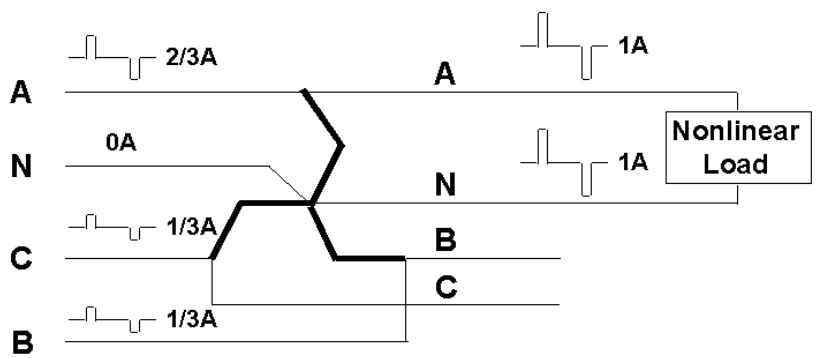

Figure 7-7—Zigzag auto transformer applied to divert triplen harmonic current flow

Phase-shifting, multi-winding transformers can be used on three-phase power systems to cancel certain orders of harmonic currents, depending on the particular phase shift provided by the transformer windings. One popular phase-shifting transformer is a delta (primary)-delta (secondary)-wye (secondary) transformer used with three phase rectifiers to provide 12-pulse rectification that effectively eliminates (cancels) 5th and 7th order rectifier harmonic currents. Other multi-winding transformers have been applied with rectifier circuits to provide cancellation of more orders of harmonic currents, particularly in high power rectifier applications, such as large motor drives. For electronic loads operating on line-to-neutral voltages, a number of multi-winding transformers have been devised that create multiphase, line-to-neutral voltages. Figure 7-8 is an example of a six-phase multi-winding transformer used to cancel 5th and 7th order harmonic load currents. In this case, two secondary wye systems are provided with 30° phase shifting to cancel 5th and 7th harmonic currents flowing from loads connected to each output phase winding. The zigzag output windings and delta primary windings cancel the triplen harmonic load currents. Thus a single transformer can cancel triplen, 5th, and 7th harmonic load currents. Since the reduction in the harmonic currents is by cancellation, the loading on each transformer output needs to be equal and balanced.

Copyright © 2006 IEEE. All rights reserved.

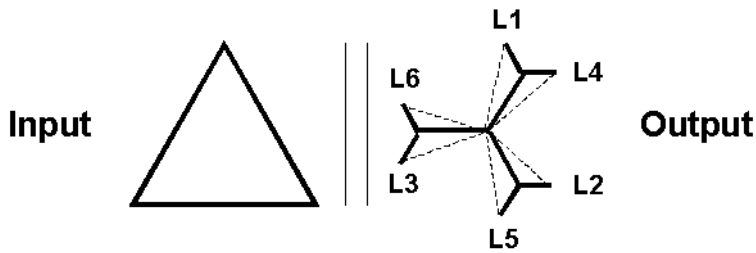

Figure 7-8—Phase-shifting, multi-winding transformer applied with line-to-neutral electronic loads to cancel triplen, 5th, and 7th harmonic currents

7.2.3.3 Active harmonic current filters

Active harmonic current filters are electronic devices that sense on a real-time basis the harmonic load currents and inject equal and opposite harmonic currents to cancel harmonic load currents. Figure 7-9 depicts a typical implementation of an active harmonic current filter. Harmonic current flows are generally reactive current flows and require minimal levels of real power to cancel. Certain implementations of active harmonic current filters can also provide fundamental frequency reactive currents to provide total power factor correction. Properly sized and designed active filters can correct the current distortion to less than 1% total harmonic distortion. Active filters use some power for their operation and are generally less efficient than passive filters. However, they can adapt to changing load conditions. Being electronic circuits, they are inherently more complex and less reliable than passive filters and, to date, have been significantly more expensive.

7.2.4 Surge suppressors

Surge suppressors encompass a broad category surge protective devices (SPDs) from large devices, such as lightning-surge arrestors, to small transient voltage surge suppressors (TVSSs) used to protect plug-connected devices. Effective surge protection for an entire building power distribution system requires the coordinated use of large-capacity current-diverting devices at the service entrance followed by lower capacity voltage-clamping devices applied strategically throughout the power system. The service entrance devices are intended to lower the energy level of a very large surge to that which can be handled by other devices closer to the loads. If improperly coordinated, excess energy can destroy the downstream suppressors and damage the connected load equipment.

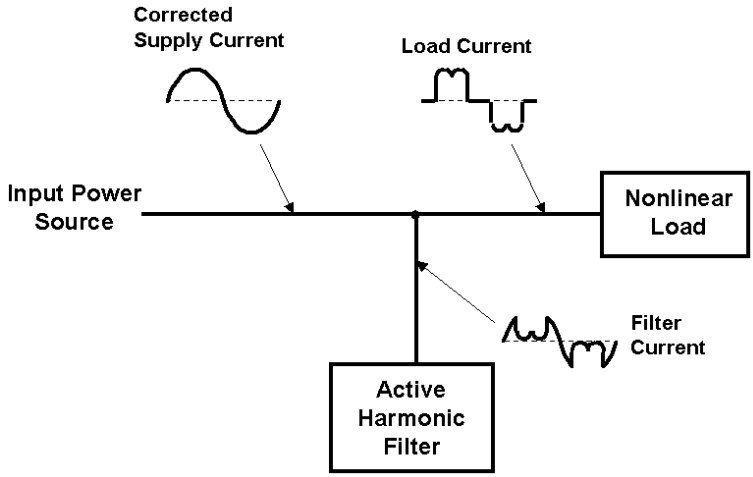

Figure 7-9—Active harmonic current filter

 Copyright © 2006 IEEE. All rights reserved.

The smaller surge suppressors are generally simple, and relatively low-cost, devices. They usually contain metal-oxide varistors, avalanche diodes, or other voltage-clamping devices that are connected across the power line or from one phase-voltage lead to another or to ground. Suppressors absorb or divert energy from surges that exceed their voltage threshold (typically 100% above the nominal line voltage). Because of their small size and low cost as compared with the equipment they serve and the cost of determining if such surges exist at a given installation (or even if this feature is already built into the computer itself), they are often routinely used as low-cost insurance against the chance of severe surges. Many of the higher quality line conditioners include suppressors. They can be added to a distribution panelboard serving electronic loads if not included elsewhere. The most effective locations for surge suppression is at the service entrance, at the output of separately derived sources (where the neutral is bonded to ground), and at the source of severe transient voltage surges, such as switched inductors, contactor coils, etc.

Surge suppression devices are packaged into various assemblies that often include power receptacles for several loads. These units are most commonly sold for use with small, single-phase loads and are available from a variety of manufacturers. The better units include fusing, agency listing, and surge capability in the form of clamping voltages and energy ratings. Most of the lower-cost units have limited ability to survive multiple large surges. The SPD may fail without any indication, leaving the load unprotected. Figure 7-10 shows a typical parallel-connected, multimode surge suppressor. Figure 7-11 shows a typical parallel-connected surge suppressor using multiple, individually fused surge suppression elements.

7.2.5 Voltage regulators

Most low-frequency voltage disturbances, except very deep sags or outages, can be handled by appropriate application of a voltage regulator. There are a number of types of voltage regulators in use today. Ferroresonant and solid-state tap-changing transformers are used today for electronic loads, rather than slower acting electromechanical types.

Early electromechanical regulators used a motor operator that moved a sliding tap on a transformer. These induction regulators follow voltage changes that occur during the day or seasonally due to application and removal of load. These units are not suitable to protect electronic loads against rapid changes in voltage.

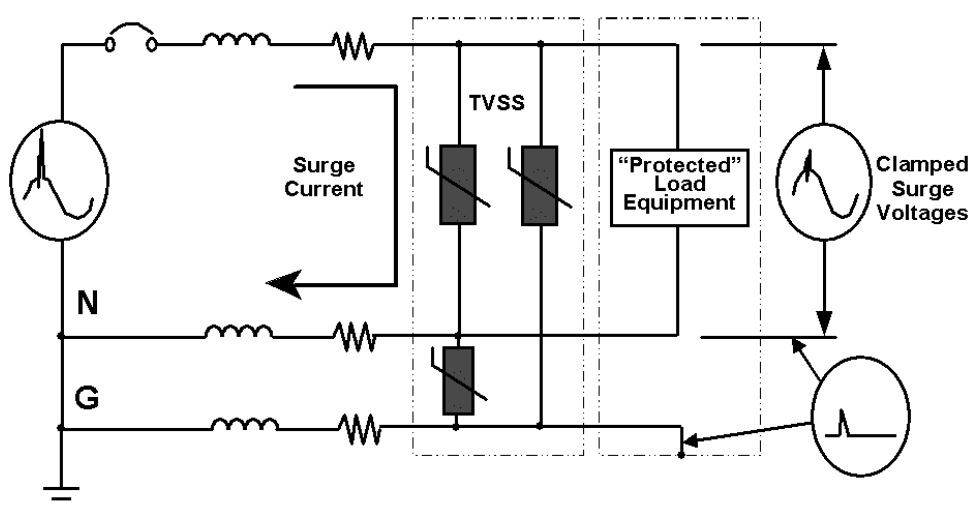

Figure 7-10—Parallel-connected, multimode surge suppressor

Copyright © 2006 IEEE. All rights reserved.

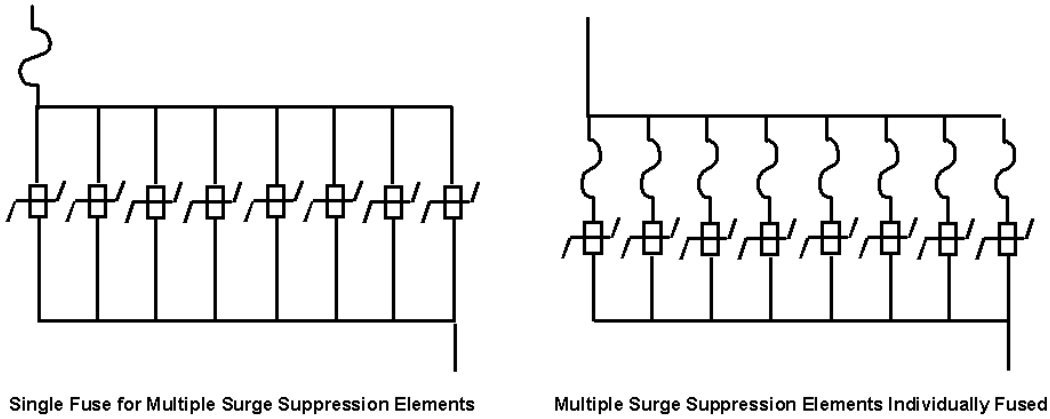

Figure 7-11—Parallel-connected surge suppressor using multiple individually fused surge suppression elements

7.2.5.1 Tap changers

Fast response regulators divide into two generic classes: tap changers and buck boost. The first is the tap-changing regulator shown in Figure 7-12. Quality tap changers are designed to adjust for varying input voltages by automatically transferring taps on a power transformer (either isolating type or auto-transformer type). The number of taps determines the magnitude of the steps and the range of regulation possible. An acceptable regulator should have at least four taps below normal and two taps above normal for seven total steps. The taps are typically in 4% to 10% steps, depending on specific designs. Response time is usually less than two cycles and is limited to that speed because of the zero current-switching and controls-stability criteria.

An advantage of the tap-changing regulator is that its series impedance is the transformer or autotransformer impedance and the semiconductor switches. It introduces little harmonic voltage distortion under steady-state operation and minimizes load-induced disturbances as compared to regulators with higher series impedance. It also has high short-term overload capability to provide for starting or inrush currents. In its usual configuration with an isolating transformer and wide undervoltage capability, it provides both common-mode noise isolation and voltage regulation.

A variation of the traditional tap-changing regulator is the use of a series injection transformer to allow smaller current tap-changing semiconductors to be used in a buck-boost mode. See Figure 7-13.

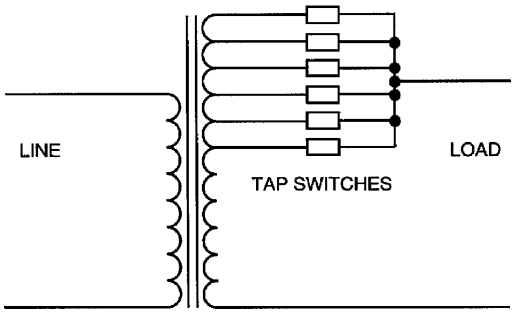

Figure 7-12—Tap-changing regulator

 Copyright © 2006 IEEE. All rights reserved.

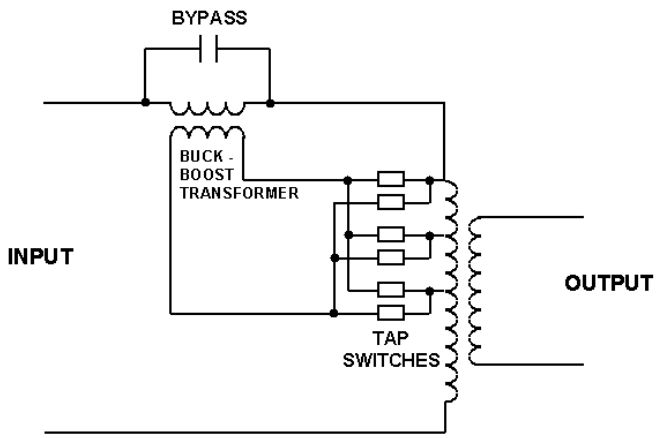

Figure 7-13—Tap-changing buck-boost regulator

7.2.5.2 Buck boost

The second class of fast response regulators is the electronic buck-boost type (Figure 7-14). It utilizes thyristor control of buck and boost transformers in combination with parametric filters to provide regulated sinusoidal output, even with nonlinear loads typical of computer systems. This is done in a smooth continuous manner eliminating the steps inherent in the tap changer. Inrush currents can be delivered for start-up typical of computer central processors or disc drive motors while maintaining nearly full voltage. Units can be equipped with an isolation transformer with electrostatic shield providing voltage step-down and common-mode attenuation when needed. Power is fed to the regulator, which either adds to (boosts) or subtracts from (bucks) the incoming voltage so that the output is maintained constant for 15% to 20% variations of input voltage. This is done by comparing the output voltage to the desired (set) level and by the use of feedback to modify the level of boost or buck so that the desired level is maintained. A parametric filter provides a path for nonlinear currents generated by the load and by the regulator itself and produces a sine wave output with low total harmonic distortion.

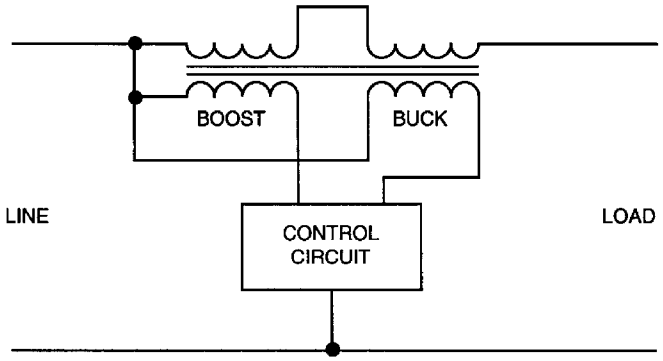

Figure 7-14—Buck-boost regulator

Copyright © 2006 IEEE. All rights reserved.

7.2.5.3 Ferroresonant constant voltage transformers

One common type of voltage regulator is a ferroresonant or constant voltage transformer (CVT). Figure 7-15 represents one design topology of a ferroresonant regulator. This class of regulators uses a saturating transformer with a resonant circuit made up of the transformer's inductance and a capacitor. The regulator maintains a nearly constant voltage on the output for input voltage swings of 20% to 40%, depending on unit loading. Being a resonant circuit, the output voltage is affected by the applied frequency. There is approximately a 1% output voltage change for a 1% frequency change. These units are reliable because they contain no moving or active electronic parts. If these units are built with isolation (and shielding), they can provide for common-mode noise reduction and provide a separately derived source for local power grounding. They also provide normal-mode noise reduction, voltage distortion isolation, and transient voltage surge protection.

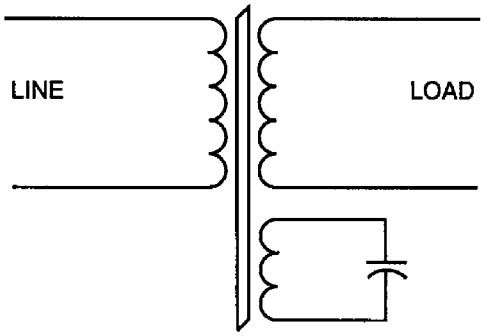

Figure 7-15—Ferroresonant regulator

Careful application is required to avoid unwanted load-source interactions. The load current tends to cause the unit to go out of resonance if it gets too high. Often these units can only supply 125% to 200% of their full load rating. If inrush or starting currents exceed these limits, the output voltage will be significantly reduced, which may not be compatible with many loads. The other devices on the output of the CVT will see this sag in the voltage and may shut down due to an undervoltage. These devices should be oversized if they are expected to provide for heavy starting or inrush currents or to provide very deep sag protection.

Ferroresonant transformers create more audible noise than regular transformers and may require special enclosures before they can be installed in office environments. For more information on ferroresonant or constant voltage transformers and application considerations, see IEEE Std 449™-1998 [B6][1] and EPRI PQTN Application Note No. 10 [B1].

7.2.6 Power line conditioners

Typical power line conditioners combine one or more of the basic power correction technologies to provide more complete protection from power disturbances. Some power line conditioners combine the noise-reduction features of isolation transformers or filtering devices with voltage regulators. Many of these units provide a separately derived source with isolation while providing voltage regulation. The advanced conditioners also incorporate surge suppressors to clamp high-voltage surges, which filtering alone does not address. Figure 7-16 depicts a power line conditioner using tap-switching voltage regulator, isolation transformer, and surge suppression.

[1]The numbers in brackets correspond to those of the bibliography in 7.7.

 Copyright © 2006 IEEE. All rights reserved.

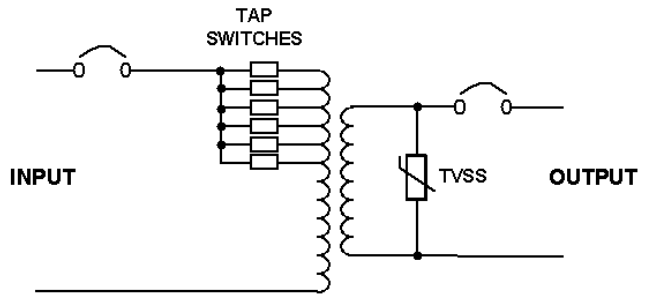

Figure 7-16—Power line conditioner

7.2.7 Computer power distribution units

A PDU is a device that provides a convenient method for distributing electrical power to information technology equipment (ITE) without the need for premises wiring, and typically includes a separately derived source for local grounding. The basic components of a PDU are a cabinet with an input disconnecting means, isolation transformer, system monitoring, output distribution overcurrent protection, and flexible output cables. See Figure 7-17. The load cables are terminated with mating connectors for connecting to the ITE. Some manufacturers include power conditioners such as tap changers, motor-alternator/generator (M-Gs) sets, or magnetic synthesizers internal to the PDU to further enhance performance.

The PDU greatly reduces the time required to install the average information technology system and allows for relatively easy relocation of equipment as compared to hard wiring methods. This can translate into significant cost and time savings. The isolation provided by the transformer (or M-G) in the PDU allows the creation of a separately derived source and common grounding point that is recommended practice in Chapter 8.

PDUs with internal voltage regulators can be used to reduce the effects of long distribution feeds from central power conditioning or uninterruptible power supply (UPS) equipment. The effect of current harmonics on the power source is a function of the type of conditioner used in the PDU.

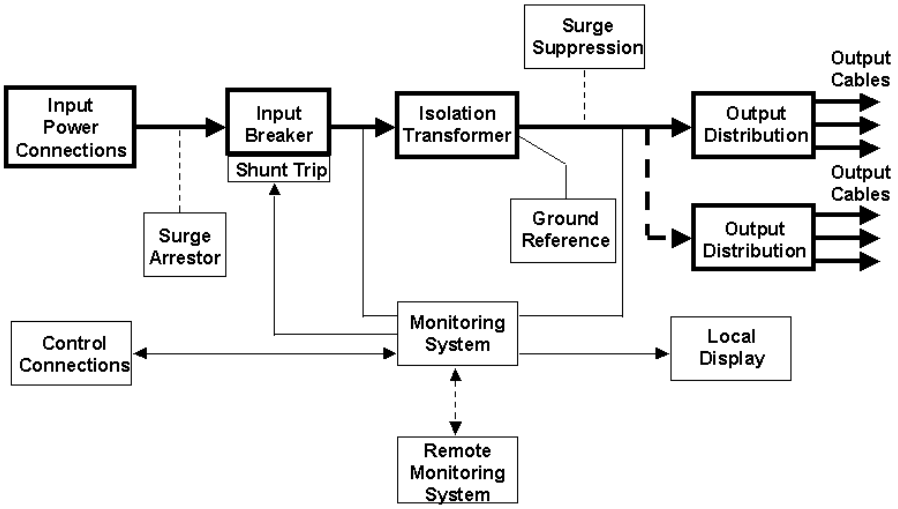

Figure 7-17—Computer PDU

Copyright © 2006 IEEE. All rights reserved.

7.2.8 Magnetic synthesizer

Another ferroresonant-based technology is the magnetic synthesizer (Figure 7-18). These units are three-phase systems consisting of nonlinear inductors and capacitors in a parallel-resonant circuit with six saturating pulse transformers. These units draw power from the source and generate an output voltage waveform by combining the pulses of the saturating transformers in a step-wave manner. They provide for noise and surge rejection and regulation of the output voltage to within 5% over large swings in input, up to ±50%. These units generally incorporate shielding into the pulse transformers to attenuate common-mode disturbances. Additional filtering is included to eliminate self-induced harmonics. This filtering can handle a reasonable level of harmonic distortion at the input or at the output as induced by the nonlinear loads. The circuit is tuned to the rated output voltage and frequency.

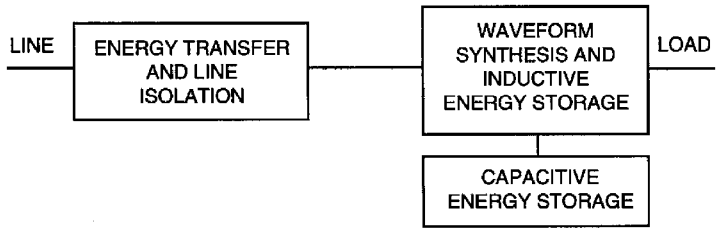

Figure 7-18—Magnetic synthesizer

The magnetic synthesizer has an inherent current-limiting characteristic that limits maximum current at full voltage to the range of 200% to 250% of rating. Beyond that load, the voltage drops off rapidly, producing typically 250% to 300% current at short circuit. This is a limitation with large inrush and starting currents. Sudden large load changes, even within the unit's rating, can cause significant output voltage variations. These units are best applied when the load does not make large step changes.

The ferroresonant circuit has stored energy and may ride through outages of one half-cycle or more depending on unit loading. Magnetic synthesizers tend to be large and heavy due to the magnetics involved and can be acoustically noisy without special packaging. Some of the larger units display good efficiencies as long as they are operated at close to full load. The magnetic synthesizer provides two-way harmonic isolation, isolating the electronic load from supply voltage distortion and isolating the supply from the load current distortion.

7.2.9 Motor-alternator/generators

M-Gs provide the function of a line conditioner and can also provide for conversion of the input frequency to a different frequency that is required by the load. Figure 7-19 depicts one configuration of an M-G. Examples of this are 60-to-50 Hz or 60-to-400 Hz frequency converters. These units consist of a utility-powered electric motor driving an ac generator that supplies voltage to the load. The motor and generator are coupled by a shaft or belts. This totally mechanical coupling of the input and the output allows the M-G to provide total electrical noise isolation of the load from the input power source. Practical M-G systems include a bypass circuit that can reduce this total input-to-output isolation, and some commercial M-G systems have the motor and generator windings in a common frame, leading to capacitive input-to-output noise coupling.

The induction motor is the least expensive of the common types of motors used on these devices. This type of motor does not rotate at the same speed as the rotating field that is generated by the input power. The speed at which the motor turns changes with load and input voltage variations. Since the generator frequency is a function of its shaft speed, the output frequency varies with the motor speed. The output voltage is maintained by controlling the excitation to the field winding of the generator and is independent of small changes of motor speed.

 Copyright © 2006 IEEE. All rights reserved.

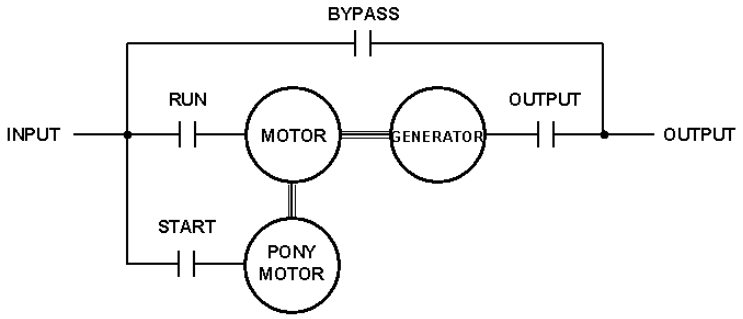

Figure 7-19—M-G set

Although most of today's computer power supplies can operate with a wide range of frequency, some loads may be frequency sensitive (e.g., ±0.5 Hz tolerance). For critical frequency applications, low slip induction motors or synchronous motors should be used. The output frequency of a synchronous M-G is the same as the input frequency. However, the synchronous M-G output voltage is not in-phase with the input power source and varies proportionate to the loading. Uninterrupted transfers between the M-G and bypass source for maintenance must accommodate the varying output phase angle of the M-G. For induction M-Gs, uninterrupted transfers to bypass can be accomplished only during the brief periods of time when the output voltage is nearly in-phase with the bypass voltage.

M-Gs protect the load from voltage sags, swells, and surges. For short-term power line voltage changes of ±20% to ±50%, voltage to the load is still maintained at nominal. A useful feature of the M-G is its ability to bridge severe short-term deep sags or outages. The rotational momentum of the rotating elements permits the M-G to span momentary outages depending on the particular M-G momentum and the frequency tolerance of the load. The M-G ride-through time may be affected if the power outage is some distance from the conditioner, so that the power system appears as a short on the input by virtue of other loads connected to the same source. Part of the rotating energy stored in the M-G can be lost by the dynamic breaking action of the motor. The limiting factor is the drop in frequency shaft speed that can be tolerated by the load as energy is removed from the M-G set. This period can be extended by adding inertia via a flywheel. Ride-through times of several seconds are available through the use of large flywheels.

Products are available that are able to maintain output frequency even while the shaft speed is slowing down. These devices do not have fixed poles in the generator. Instead, the poles are created or "written" as the device rotates. When input power is lost and the shaft speed starts to decay, the spacing of the poles is reduced and their number is increased so that the frequency remains constant. This method achieves ride-through times that are significantly longer than other M-G sets with the same rotating energy at the cost of increased complexity and lower efficiency.

Another form of M-G is referred to as a *rotating transformer*. These units have a common rotor with two stators. One is the motor stator and the other is the generator's stator. These are compact units that have demonstrated excellent efficiency. One drawback of this design is that they do not provide the same level of noise and surge isolation between the input and the output as conventional M-Gs. The noise and surges have a path through the unit because of the capacitive coupling between the two stators that are typically wound one on top of the other.

M-Gs tend to be more expensive than other types of line conditioning equipment. They are usually physically large and heavy. Depending on the design, the M-G efficiency can be relatively low so that electrical energy costs over its lifetime may be significant. The rotary transformer types, as well as some of the larger standard units, display better efficiencies. M-Gs tend to be noisy and require soundproof enclosures to make them suitable for computer room installation. M-Gs do not introduce measurable current

Copyright © 2006 IEEE. All rights reserved.

distortion on their input source and have the added advantage of lowering the overall level of distortion by isolating the utility from the harmonic current requirements of the loads supplied by the generator.

7.2.10 Static transfer switches

STSs use semiconductor switches to provide very fast, break-before-make switching between two independent power sources and are applied to improve the quality and reliability of power to the connected loads. Figure 7-20 depicts a typical STS incorporating maintenance bypass provisions to each input source. Proper application of STSs require the two input power sources to be as independent as possible so that there are no simultaneous power source failures, both input sources need to be synchronized within 10° to 15° to keep from causing sudden phase shifts during transfers that can upset the load equipment, and both input sources need to be nominally available so that the STS has an alternate source available to transfer to in case of switch failure (analogous to having a bypass source available for UPS systems).

STSs have been applied at both the medium (up to 34 kV) and low (<600 V) voltages. As with most power conditioners, application as close to the protected load as possible yields the greatest protection.

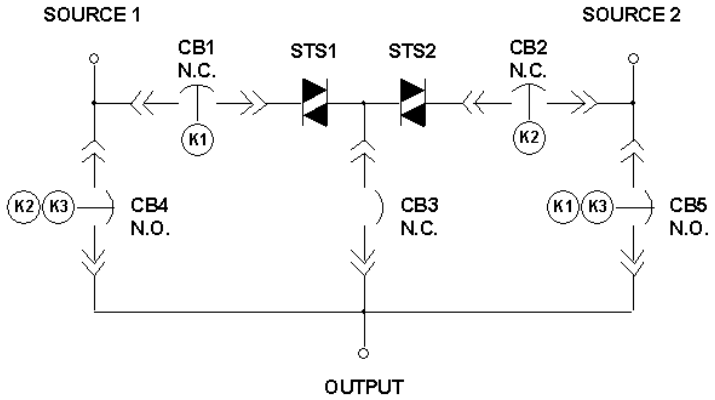

Figure 7-20—Typical stand-alone STS with bypass provisions to both input sources

7.2.11 Standby power supply

Standby power supplies are back-up power systems in which the load is normally supplied by the input power source. Figure 7-21 shows one configuration of the standby power supply. The standby power supply only supplies the load when the input power source is determined to be not acceptable (see IEEE Std 446™-1995 [B5]). These power systems are intended for loads that can tolerate a discontinuity of power during the transfer. They come in a number of configurations using a number of technologies and are used for a variety of loads ranging from personal computers to emergency lighting. There are significant variations in the power failure detection and transfer times and the type of output waveform supplied when the normal power source is not available.

The simplest form of standby power supply has the load connected to the input power source through a transfer switch during normal operation. In the event of an input power failure, the load is transferred to an inverter that generates ac power to support the load. The inverter output voltage waveform can be a sine wave, square wave, quasi-square wave, or other nonsinusoidal waveform deemed satisfactory to support the load. The inverter is fed from a battery that has been maintained at full charge from a rectifier unit that is fed from the utility source. The design of this type of supply allows several economies. First, the inverter is not supporting the load on a continuous basis. It only has to operate for the duration of the power outage or for the support time of the batteries. This period is typically 15 min or less. The quality of the inverter output waveform is generally less than for an on-line UPS. Second, the rectifier section only has to recharge the battery and not support the full load of the inverter.

 Copyright © 2006 IEEE. All rights reserved.

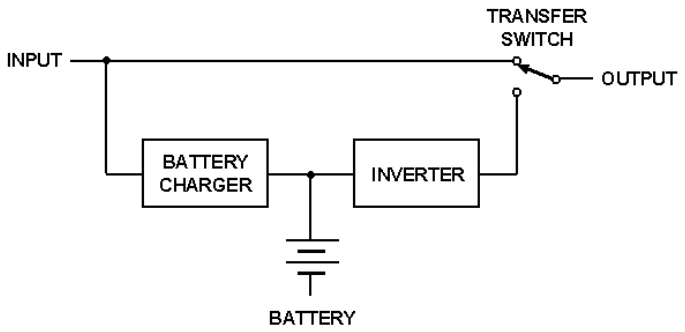

Figure 7-21—Standby power supply

Normal operating efficiency of this type of unit is high since the load is being fed from the utility under normal operation. The losses are those associated with the line conditioning element (if used) and the battery charging circuit. A major requirement of this type of unit is its ability to sense all types of power failures and transfer to the inverter without an unacceptably long input-power loss to the load equipment. These units are typically successful in powering systems that have power supplies that can tolerate short durations of input-power interruption. They are often employed with loads that utilize switch-mode power supplies, which often do not require regulated voltage and are tolerant of momentary loss of power during the transfer.

A common enhancement of the standby power supply involves the use of some form of power conditioner in series with the load to provide conditioning of the supply voltage during normal operation as shown in Figure 7-22. The conditioner can be one of the types that were previously discussed. Most commonly available standby power supplies use some form of transient voltage surge suppression and/or noise filtering. Another variation of the standby power supply uses a tap changer that powers the load under normal operation to provide some voltage regulation. Some manufacturers take advantage of the extensive capability of some of the conditioners, such as the ferroresonant transformer, magnetic synthesizer, and M-G. The filtering capability allows them to use a very simple inverter circuit that generates square waves as opposed to sine waves. The line conditioner is in circuit all the time and provides conditioning of the inverter output as well as the utility during normal operation. Continuous regulated output power can be achieved by this method if the line conditioner has sufficient ride-through to power the load during the interruption time (see 7.2.12.1).

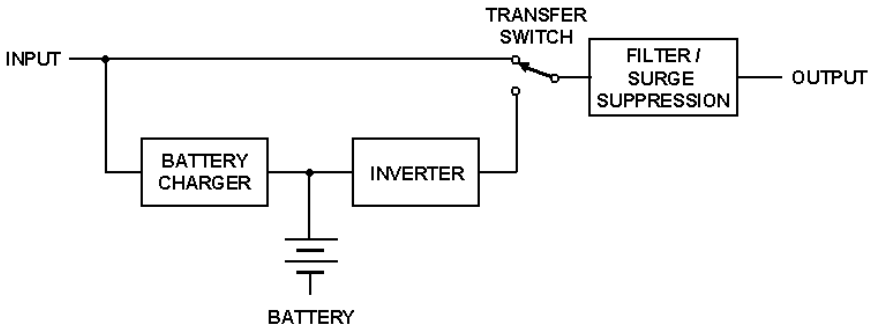

Figure 7-22—Standby power supply with power conditioning

Copyright © 2006 IEEE. All rights reserved.

7.2.12 Uninterruptible power supplies

UPSs are intended to provide regulated, uninterrupted output power regardless of the condition of the input power source, including total power outages. UPSs come in a variety of configurations and utilize various technologies. The major categories of UPS are rotary and static UPS.

7.2.12.1 Rotary UPS

A rotary, or M-G UPS, consists of a rotary line conditioner modified to receive power from a battery when utility power is not available. Three major methods are used to provide this uninterruptible performance.

An early form of rotary UPS involved the addition of a dc motor to the M-G system (Figure 7-23). When the normal input power source is available, the ac motor rotates the output alternator (generator) and the dc motor operates as a generator to charge the batteries. When the normal input power source fails, the dc motor uses power from the batteries to rotate the output alternator to support the load. These motors can be on the same shaft or can be connected by drive belts. The battery is recharged directly from the dc motor. This is accomplished by controlling the field current to change the function of the dc motor to that of a generator. This approach reduces the complexity of the system, but disadvantages include low efficiency, high cost, large size, high audible noise, and high maintenance costs.

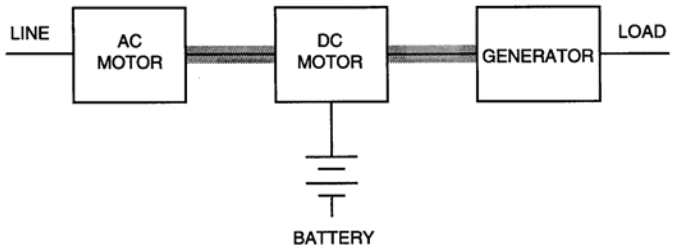

Figure 7-23—Rotary UPS with dc motor/generator

A variation of this early rotary UPS configuration uses an M-G with a dc motor driving the alternator with the dc for the motor being derived from a solid-state rectifier, which also charges the system batteries. The one-line diagram of this configuration is similar to a solid-state UPS, where the solid-state inverter has been replaced with an M-G rotary inverter.

A more common rotary UPS configuration uses a static inverter/motor drive to supply ac power to the motor during utility power outages (Figure 7-24). When input power is lost, the inverter converts the power from the batteries into ac, which is supplied to the input of the motor. This switchover is accomplished during the ride-through time that the inertia of the M-G provides. A bi-directional inverter or a separate battery charger can be used during the time that the input power source is available to charge the battery.

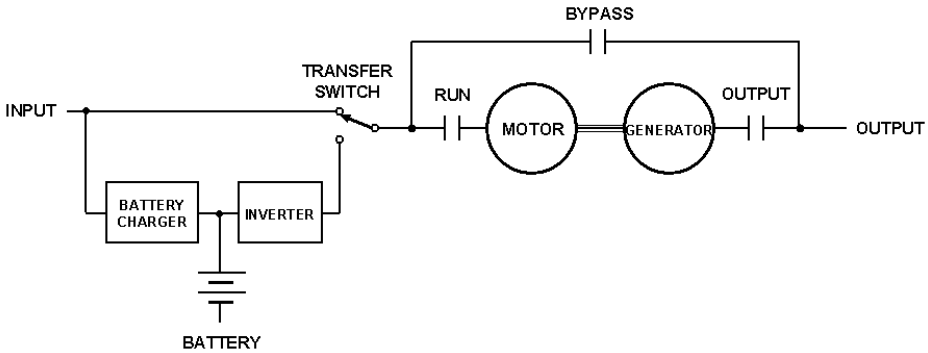

Figure 7-24—Rotary UPS with static inverter

 Copyright © 2006 IEEE. All rights reserved.

A bypass transfer switch is usually included with a rotary UPS. These switches can be solid-state or electro-mechanical. The switch transfers the load to the bypass source for maintenance of the UPS or in case of a failure within the M-G. With synchronous M-Gs, the transfer can be made at any time due to the inherent near phase lock of the output with the utility source. With induction M-Gs, the bypass transfer must be delayed until the output voltages are nearly in-phase with the bypass source.

A more complicated rotary UPS configuration involves the integration of an engine with the M-G to provide long-term outage protection that is normally provided by standby engine-generator sets. One such configuration is shown in Figure 7-25, where the inertia stored in the M-G is used to bridge the time required to get the engine started after a power failure. Some configurations use extra energy storage means, such as a high-speed rotor or hydraulic accumulator, to provide power to the M-G set during the power failure before the engine is started.

The amount of current distortion introduced by a rotary UPS is a function of its design. Units without a solid-state rectifier typically do not introduce harmonic currents into the source. Units with rectifiers that are used only to charge the batteries typically will not introduce significant current distortion during battery recharging since the charger is typically only 10% of the system rating. A rotary UPS that has a rectifier supplying a dc motor will introduce current distortion based on the type of rectifier and amount of filtering provided. These units are the same as static UPSs that utilize similar rectifier configurations.

7.2.12.2 Static UPS

The static UPS is a solid-state device that provides regulated uninterrupted power to the critical loads. Static UPSs fall into two basic designs: double-conversion rectifier/inverter, illustrated in Figure 7-26, and line-interactive, illustrated in Figure 7-27.

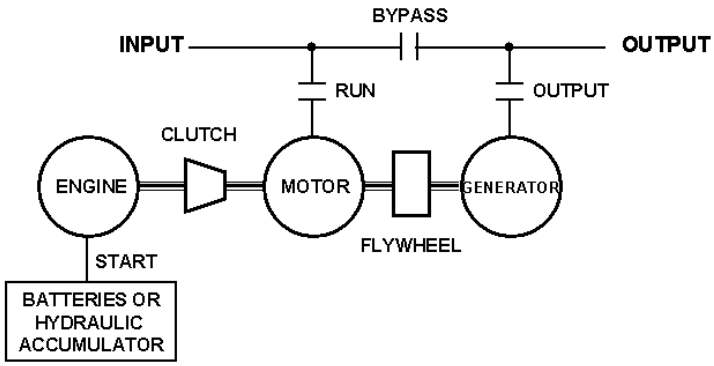

Figure 7-25—Rotary UPS with integrated engine

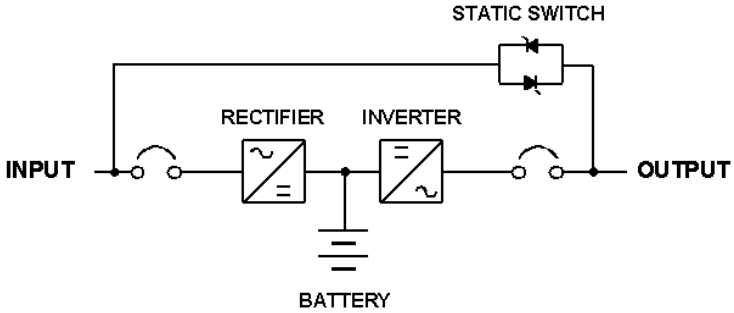

Figure 7-26—Double-conversion rectifier/inverter UPS

Copyright © 2006 IEEE. All rights reserved.

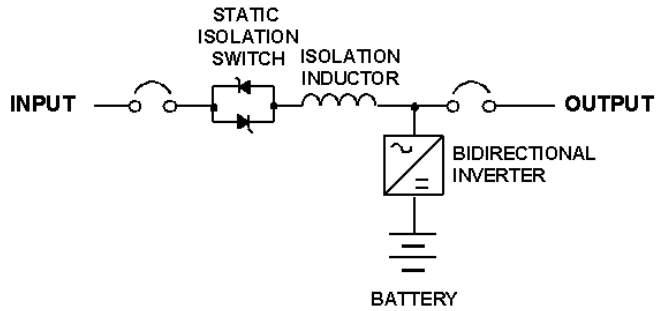

Figure 7-27—Line-interactive UPS

In the double-conversion rectifier/inverter UPS, input power is first converted to dc. The dc is used to charge the batteries and to constantly operate the inverter. In the line-interactive (or single conversion) UPS, utility power is not converted into dc but is fed directly to the critical load through an inductor or transformer. Regulation and continuous power to the critical load is achieved through the use of inverter and switching elements in combination with inverter magnetic components, such as inductors, linear transformers, or ferroresonant transformers. These systems require relatively complicated controls on the inverter to provide improved output voltage regulation and, in some cases, improved input power factor or improved input current distortion. In this case the inverter controls its phasing and duty cycle to both charge the battery and provide a voltage component to be summed in the transformer. The term *line interactive UPS* comes from the fact that the inverter interacts with the ac line to buck, boost, or replace incoming ac power as needed to maintain voltage control. An important part of the line-interactive UPS design is the capability to disconnect from the supply power source under all fault conditions. Typically, forced-commutated static switching elements are required to reliably disconnect from the supply to prevent reverse power flow from the inverter to the source.

7.2.12.2.1 Rectifier types

Most static UPS utilize some form of a solid-state rectifier to convert the incoming ac to regulated dc, which is used to charge batteries and/or supply an inverter. There are several types of rectifiers used, including single-phase full-wave rectification with and without boost converters, three-phase, six-pulse rectification with and without passive filtering; three-phase, twelve-pulse rectification with and without passive filtering, and synchronous rectification. Each comes with its own characteristic input current distortion and input power factor over the input voltage and load range.

With the increased emphasis on reducing input current distortion, it is common to find single-phase, double-conversion UPSs with diode rectification and some form of boost converter to provide low input current distortion [5% total harmonic distortion (THD)] and high input power factor (>95%).

For three-phase UPSs, the most popular rectification remains six-pulse rectification using silicon controlled rectifiers (SCRs). The characteristic input current distortion of these rectifiers is around 30% THD at full load with the primary harmonic currents being the 5th and 7th harmonic. Passive filters can be added to reduce the input current distortion to less than 10% THD at full load. A potential disadvantage of passive filters for six-pulse rectifiers is the large amount of capacitance that is typically required and the associated leading power factor at lighter load levels.

Twelve-pulse rectifiers (using a delta-delta-wye isolation transformer and two six-pulse rectifier bridges) have a characteristic input current distortion of 12% at full load with the predominant harmonic currents being the 11th and 13th harmonic. Passive filters can be added to reduce the input current distortion to less than 5% THD. Passive filters for twelve-pulse rectifiers require a smaller amount of capacitance and typically do not have significantly leading power factors at loads greater than 25%.

 Copyright © 2006 IEEE. All rights reserved.

Synchronous rectifiers typically use transistors to rectify the ac in a high frequency switched manner to produce low levels of input current distortion (typically <5%).

7.2.12.2.2 Inverter types

Static UPS uses some form of a solid-state inverter to convert the dc voltage from the rectifier or battery to regulated ac output voltages. There are a number of types of inverter configurations used, including step-wave, pulse-width modulation (PWM), and resonant converters. The performance of each type of inverter can be generalized. However, due to the wide variation in implementations, the specific performance of any given product can be more of a function of the control implementation rather than the basic topology.

Generally, PWM inverters provide better step-load and nonlinear load performance since the waveform can be corrected many more times throughout the cycle than a fixed step-wave inverter. The major disadvantage of PWM inverters is typically lower efficiency due to higher switching losses.

High-frequency resonant converters seek to overcome the disadvantage of PWM inverters by switching at zero current to minimize switching losses. However, there are few commercial implementations of high frequency resonant converters due to their complexity.

7.2.12.3 Energy storage means

All standby power supplies and UPS need some form of energy storage means. The most popular method of storing short-term back-up energy is batteries, with the most popular battery type being lead-acid. Emerging alternate energy storage means include other types of batteries, flywheels, superconducting magnets, and ultra-capacitors.

7.2.12.3.1 Batteries

There are two main types of lead-acid batteries used for UPS applications: wet-cell and sealed valve-regulated (also known as *maintenance-free*). The original type is the wet-cell battery. This type is used in large installations with long back-up times. Wet-cell batteries are generally installed on open racks, usually in a dedicated room with separate ventilation from the rest of the facility. Ventilation is required because, under certain conditions, the batteries generate hydrogen gas. Often hydrogen detectors, temperature detectors, showers, eyewashes, and spill containment are required by local code. All of these items add to the cost of the installation. Some of the considerations discussed in the following paragraphs may become more or less significant as battery technology evolves.

The life of the wet-cell battery is affected by the environment and the operating conditions. Most battery manufacturers specify that the average temperature in the battery room should be 25 °C. At low temperatures, the battery capacity (back-up time) is less than normal. The battery life decreases and loss of electrolyte increases as the temperature increases. These batteries generally have a specified life of 10 to 20 years. The rate of internal breakdown within the battery increases with temperature. The effective life of the battery can be significantly shortened by operating at elevated temperatures. Battery life is also a function of the number of discharges and the depth of discharge. Wet-cell batteries in UPS applications can have a useful life on the order of hundreds of discharges.

In recent years, sealed valve-regulated maintenance-free batteries have been used in increasing numbers for UPS applications. These units can be housed in cabinets or placed on open racks. They still require maintenance during their life, but do not allow water to be added. These batteries do not generate significant gas during normal operation. Their low-gassing level allows the batteries to be housed in cabinets and installed almost anywhere, including on the computer room floor next to the UPS. The special requirements for wet-cell batteries generally are not required. If the batteries are located next to the UPS cabinet, the amount of cabling required is greatly reduced. All these items generally make the valve-regulated batteries much less expensive to install.

Copyright © 2006 IEEE. All rights reserved.

Depending upon design and mission objectives, the warranted life of valve-regulated batteries can range from 2 to 20 years. Their actual life is affected by the same conditions as the wet-cell batteries. By definition, sealed valve-regulated batteries have a limited amount of electrolyte, which is not replenished during their life.

In most UPS applications, the batteries are maintained at their float voltage. This is the voltage that allows the batteries to become fully charged but not overcharged. The battery accepts the amount of charge necessary to maintain full charge and no more. Most UPS batteries are made up of cells that are connected in series to achieve the desired voltage level. Since these batteries are wired in series, the same current flows in each battery. If one battery tends to self-discharge a little faster than the rest, it will slowly become less charged than the rest. This situation is detected by periodically measuring the voltage across each battery to verify that they are closely balanced. If the voltages vary beyond limits, an equalizing charge is performed. This charge involves raising the charge voltage above the float value for a specified length of time. This charge-cycle forces additional charge current to flow through all of the batteries. The lower voltage cells are brought up to full charge and the others are slightly overcharged. It is often necessary to parallel strings of batteries to achieve the desired amount of back-up time.

7.2.12.3.2 Flywheels

Flywheels store energy in their rotating mass. A change in speed results in a change in energy. Flywheels have been added to M-Gs to increase their ride-through time. More recently, the development of high speed flywheels, more efficient bearings, and better power conversion electronics to effectively remove more of the total stored energy have allowed flywheels to become an alternative to batteries for short-term back-up times. The proposed advantages include smaller size, simpler installation, unlimited number of discharges, better temperature tolerance, reduced maintenance, and longer useful life. Disadvantages include significantly higher initial cost and limited back-up time.

7.2.12.3.3 Superconducting magnets

Superconducting magnets store energy in the magnetic field of a dc inductor. Superconductive wires are used in the inductor to greatly reduce losses. Large values of inductance are required to provide practical energy storage. Advantages of superconducting magnets include the ability to provide high power for brief discharge times, unlimited number of discharges, small size, and long useful life. Disadvantages include high initial cost, the ongoing use of cryogens, system complexity, and limited back-up time.

7.2.12.3.4 Ultra-capacitors

Ultra-capacitors store energy in the dc charge of a capacitor. The significant difference of an ultra-capacitor is the value of capacitance that can be practically achieved. Ultra-capacitors can provide several farads of capacitance. Current technology has relatively low voltage limitations. Electronic circuits are required to properly charge and discharge the ultra-capacitor. Advantages of ultra-capacitors include a high number of charge and discharge cycles, low maintenance cost, and moderate initial cost.

7.2.12.4 UPS system configurations

The reliability and availability of a UPS is very much influenced by its system configuration. There are a number of options available to improve the basic reliability and availability of the UPS, independent of the type of UPS that is used. Most practical UPSs include a bypass circuit (static bypass switch) that allows a very fast transfer to a bypass source without disrupting the connected load equipment. The bypass circuit is used in case of UPS failure or overload. With a separate bypass source and proper independent control and operation, an automatic bypass circuit can improve the reliability and availability of power to the connected load by a factor of five over a UPS without an automatic bypass circuit.

 Copyright © 2006 IEEE. All rights reserved.

7.2.12.4.1 Maintenance bypass

An external maintenance bypass circuit is used to allow the UPS to be bypassed and isolated for maintenance, repair, testing, or alteration without disrupting power to the load. A typical maintenance bypass circuit for a static UPS is shown in Figure 7-28. The availability of power to the connected load is improved as maintenance of the UPS can be done without a load shutdown, and maintenance of the UPS is more likely to be done on a regular basis, which improves the reliability of the UPS.

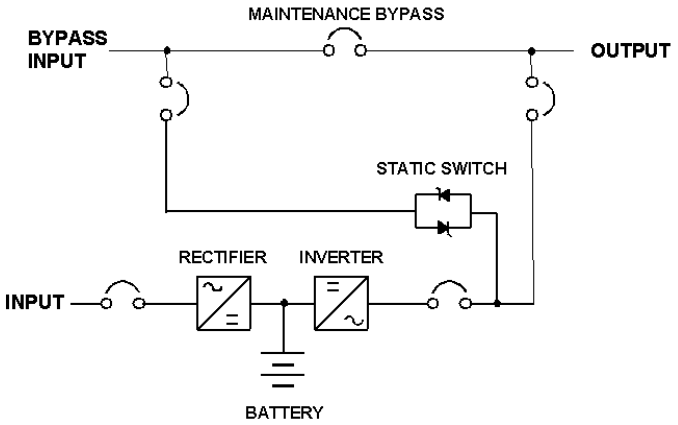

Figure 7-28—Static UPS with external maintenance bypass circuit

7.2.12.4.2 Isolated redundant UPS

For some applications, a single-module UPS configuration contains an unacceptable risk of UPS failure when the bypass is not available (such as a battery failure coincident with an ac input failure), and it requires that the connected load be exposed to unprotected bypass power during periods of UPS maintenance. An isolated redundant UPS configuration, such as shown in Figure 7-29, was devised to correct these deficiencies. In this configuration, a "reserve" UPS module supplies the "primary" UPS module's bypass input. In this way, protection against the primary module's battery failure is obtained and the risk of the primary UPS module failure when the bypass power is not available, as well as continued UPS protection during periods of the primary UPS module maintenance can be obtained. However, drawbacks of this configuration include relying on the proper operation of the primary module's static bypass switch to obtain power from the reserve module, the requirement that both UPS modules' static bypass switches must operate properly to supply currents in excess of the UPS's capability (such as those needed to clear faults or supply large inrush currents), and the requirement that the reserve UPS must accept large step loads when the primary module transfers to bypass.

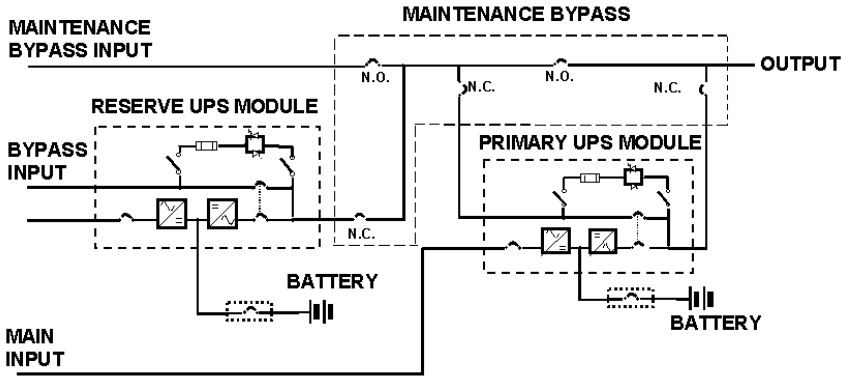

Figure 7-29—Isolated redundant static UPS with external maintenance bypass circuit

Copyright © 2006 IEEE. All rights reserved.

Isolated redundant UPS configurations have also included a single reserve module providing backup to several independent primary UPS modules. In that configuration, the reserve module generally is sized to support only one of the primary UPS module's load at a time, which requires complexity in the switchgear configuration to automatically disconnect the other primary UPS modules' bypasses from the reserve module upon the first primary module's transfer to bypass. Any reliability gains of this configuration are often more than offset by the complexity of the switchgear and associated controls.

7.2.12.4.3 Parallel redundant UPS

Another redundancy approach, one that is widely applied in large UPS applications, is the use of parallel redundant UPS modules with a system-level static bypass switch. N+1 redundancy is obtained by providing one more UPS module than is required to support the total load. A typical parallel redundant UPS configuration is shown in Figure 7-30. Some of the drawbacks of this approach are that system-level controls are required and that well-designed module disconnecting means are required to properly isolate a faulted UPS module from the parallel bus without disrupting the connected load. Further, the principles of reliability dictate that the fewer parallel modules required for redundancy the better. For example, the calculated system mean time between failures (MTBF) of two parallel redundant modules is three times the MTBF of the same UPS modules where three modules are required for redundancy, and 15 times the MTBF of the same UPS modules where six modules are required for redundancy.

A variation of the parallel redundant configuration without a system control cabinet is the 1+1 configuration. In this configuration, two single-module UPSs, each with an internal static bypass switch, are connected in parallel. Usually, some form of system-level control is required to allow the modules to share the load and control transfers to the bypass source. Parallel UPS modules without a system control cabinet are generally limited to redundant configurations due to the problem of sharing the load between modules while operating on the bypass source, because multiple small static bypass switches operate in parallel. Often some form of impedance is required in the module bypass circuits to control load sharing while on the bypass source. Further, complete system level bypass and isolation for maintenance in 1+1 configurations is troublesome.

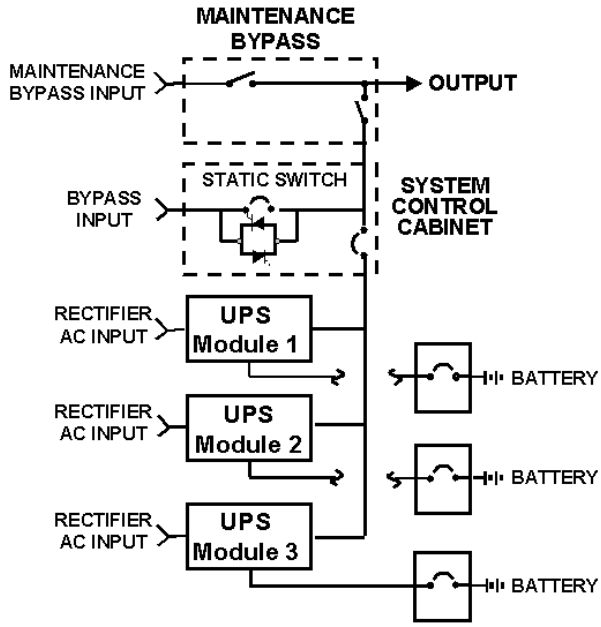

Figure 7-30—Parallel redundant static UPS with external maintenance bypass circuit

 Copyright © 2006 IEEE. All rights reserved.

7.2.12.4.4 Dual-bus UPS systems

Another configuration that allows maintenance of the UPS without exposing the connected load to unconditioned bypass power is a tied dual UPS bus system. Two UPS systems (single module or paralleled modules) are connected together on their output using a conventional three-breaker tie scheme. The tie breakers are electrically operated and controlled by the UPS systems to allow the UPS systems to be paralleled while operating on inverter. The tie connection can be operated normally open or normally closed. Dual UPS busses for redundant distribution systems generally operate with the tie breaker open. One advantage of the tied dual UPS bus system, if implemented properly, is the ability to shift the loads to and from either UPS system without exposing the connected load to the bypass source. In effect, the two otherwise independent UPS systems are operated in parallel when the tie breaker is closed, before one of the UPS systems is isolated. In some versions of the tied dual UPS bus configuration, the tie breaker can be closed indefinitely without isolating one of the UPS systems, in effect operating the two UPS systems as one large parallel UPS system. This mode of operation can be useful to maintain redundancy of the UPS modules when multiple UPS modules may be off-line. For example, if two of three UPS modules are required to support the total UPS load (combination of load 1 and load 2) and one module from each side of a dual three-module UPS bus is disconnected (off-line), then the tie breaker could be closed to regain redundancy of the UPS modules. In this case, with the tie breaker closed, even with two UPS modules off-line, there are four remaining UPS modules available to support the total load (which results in N+2 redundancy, because only two UPS modules are required to support the total load).

7.2.12.4.5 Distributed redundant UPS

The dual UPS bus configuration has become increasingly popular for critical information processing centers, not because of the tied system capability but rather as a “distributed redundant” configuration. The distributed redundant configuration requires a complete change in the approach generally taken for large UPS system design. The change is reflected in the results of a survey of large information processing center downtime where 79% of the failures causing load equipment disruption occurred between the UPS output bus and the load equipment. This is to be expected because the largest exposure to single points of failure in a typical UPS system is from the UPS output bus to the load. The emphasis of critical power system designs needs to be maintaining power at the input terminals of the load equipment, not at the UPS output. This change in thinking has brought about the distributed redundant UPS configuration. In its basic form, it involves creating two independent (redundant) UPS system busses and redundant power distribution systems, eliminating as many single points of failure as practical, all the way up to the load equipment’s input terminals. Figure 7-31 demonstrates the concept of a distributed redundant UPS system showing several methods of providing redundant ac inputs to the load equipment.

To provide “fault tolerance” in the distributed redundant power distribution system, some method of allowing the load equipment to receive power from both UPS power busses must be provided. Protecting against fast power system failures (such as a circuit-breaker trip or a power system fault) requires a commensurately fast switching method. STSs have been applied to accomplish very fast (<1/4 cycle), break-before-make transfers between the two UPS sources. It is important that the two UPS power sources be designed to be as independent as practical to eliminate any common failures. Likewise, the switching between the two power sources needs to be break-before-make to maintain the independence of the two sources.

A number of power distribution configurations have been devised to provide various levels of redundancy in the power distribution system. For example, STSs have been applied at the output of the UPS busses (feeder-level STSs), at the input of each power distribution unit (PDU), and at the output of two (redundant) PDUs. The closer the STS is applied to the load equipment, the fewer single points of failure remain between the redundant UPS power system and the load equipment. The ultimate in the distributed redundant UPS configuration is two independent UPS power distribution systems with all dual-input load equipment, where the load equipment can operate with either of the two ac inputs powered.

Copyright © 2006 IEEE. All rights reserved.

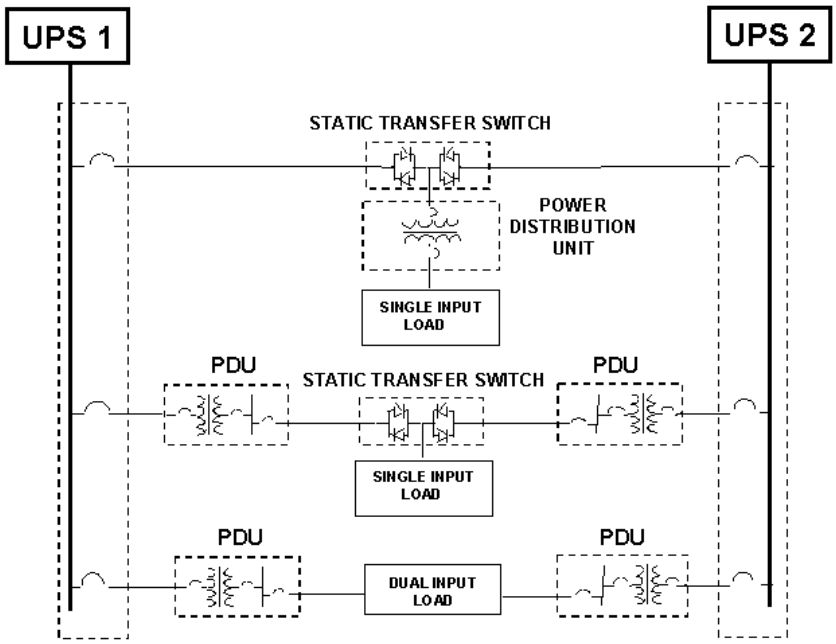

Figure 7-31—Distributed redundant static UPS with various distribution options

7.2.13 Fuel cells

A fuel cell (see *Fuel cell technology* [B3]) is an electrochemical device where the energy of a chemical reaction is converted directly into electricity. Fuel cells were invented in 1839 by Sir William Grove, but the first practical application was to provide electricity for U.S. spacecraft in the 1960s. Today there are a number of fuel cell types with the most popular being the proton exchange membrane (PEM). Other types include the alkaline fuel cell, phosphoric acid fuel cell, solid oxide fuel cell, and molten carbonate fuel cell. PEM advantages include lower operating temperature (around 80 °C) and tolerance to less pure fuels.

Hydrogen is the primary fuel source for fuel cells where it is combined with oxygen in the presence of a catalyst to produce a direct current flow from a cathode to an anode. A single fuel cell produces about 0.7 V so multiple fuel cells are stacked to provide the desired output voltage. Fuel reformers are used to extract hydrogen from other fuels, including methanol and natural gas.

Fuel cells have been applied as alternate electrical energy sources much like engine-generators, windmills, and solar cells. Since the output of the fuel cell is direct current, inverters and other interface controls are required to provide ac power. Distributed power generation is an emerging fuel cell application where the fuel cell is operated continuously. Fuel cells are not good candidates for standby power applications or as substitutes for batteries since they have significant start-up time (60 s to 30 min minimum) and relatively poor dynamic load response. Relatively high cost (first cost and operating costs), complexity, and the low fuel cell stack life expectancy (1000 h to 10 000 h) have limited fuel cell ac power generation applications to demonstration projects.

7.2.14 Medium-voltage distribution power quality enhancement products

Medium-voltage power electronics-based products have been developed to provide additional options for the utilities and large commercial and industrial customers to improve power quality on utility distribution systems. Progressive utilities have worked with customers to include provisions in their power specifications for the following:

 Copyright © 2006 IEEE. All rights reserved.

a) Fewer power interruptions

b) "Tight" voltage regulation, including short duration sags or swells

c) "Low" harmonic voltage distortion

A family of power electronic devices is available to achieve these customer power objectives, including:

1) Solid-state circuit breaker (SSB) to provide power quality improvement through nearly instantaneous (<1 ms) current interruption, thereby protecting sensitive loads from disturbances that conventional electromechanical circuit breakers cannot eliminate.

2) Solid-state transfer switch (SSTS) to provide very fast transfers of sensitive loads from a disturbance on the normal feed to an undisturbed alternate feed.

3) Dynamic voltage restorer (DVR) to protect a critical load from disturbances (e.g., sags, swells, transients, or harmonics) originating on the interconnected transmission or distribution system.

4) Distribution static condenser (DSC) to protect the distribution system from the effects of significant harmonics-producing loads.

Figure 7-32 shows how these devices can be deployed on the distribution system to provide power quality improvement at the distribution feeder level for premium power customers.

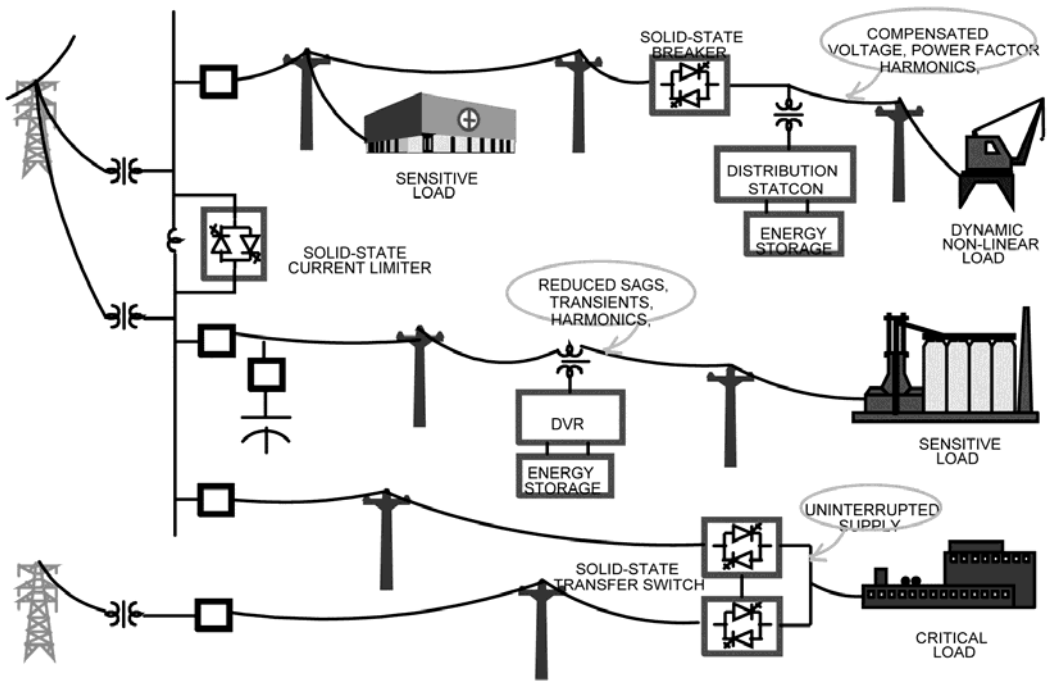

Figure 7-32—Medium-voltage power enhancement products

7.2.14.1 SSB description and applications

Manufacturers have incorporated advanced current interruption technology, utilizing power electronics, to quickly clear distribution system faults that result in voltage sags, swells, and power outages.

When combined with a current-limiting reactor or resistor, the SSB can rapidly insert the current-limiting device into the distribution line to prevent excessive fault current from developing from sources of high short-circuit capacity (e.g., multi-sourced distribution substations).

Copyright © 2006 IEEE. All rights reserved.

The SSB is designed to conduct inrush and fault currents for several cycles and to disconnect faulty source-side feeders in less than one half-cycle. The capability of the SSB to provide this performance is dependent primarily on the rating and operating characteristics of the power semiconductor devices used for the ac switches making up the circuit breaker. At the power levels associated with 15 kV and higher voltage class systems, commercially available gate turn-off (GTO) thyristors and conventional thyristors (SCRs) can be used for the ac switch.

Various SSB applications are shown in Figure 7-33.

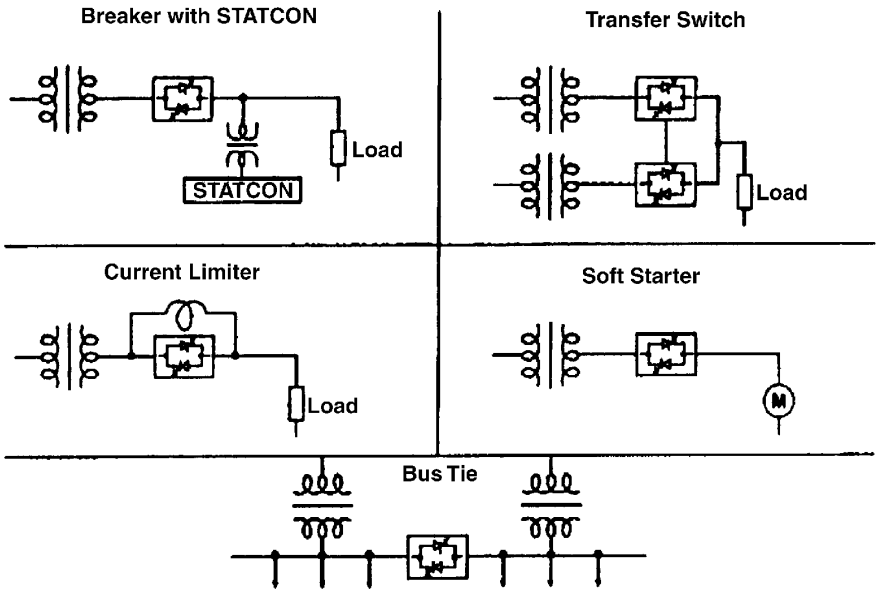

Figure 7-33—Potential applications for solid-state breakers

7.2.14.2 SSTS description and applications

SSTSs are capable of providing higher availability power to critical customers. Solid-state, fast-acting (subcycle) circuit breakers can very quickly transfer loads from a normal supply that experiences a disturbance to an alternate supply that is unaffected by the disturbance. The alternate supply may be another utility primary distribution feeder or a standby power supply operated from an integral energy storage system. In this application, the SSB acts as an extremely fast transfer switch that allows the restoration of power of specified quality to the load as fast as one quarter-cycle.

The SSTS consists of two three-phase SSBs, each with independent control. The status of the three individual phase switches in each SSB is individually monitored, evaluated, and reported by real-time switch control and protection circuits. The operation of the two SSBs is coordinated by the transfer switch control circuit that monitors the line conditions of the normal and alternate power sources and initiates the load transfer in accordance with operator-selectable criteria.

The SSTS can be provided with either SCR or GTO switches depending upon the specific load transfer speed requirements.

SSTS voltage and current ratings are available for 4.16 kV to 34.5 kV and 300 A to 1200 A continuous.

System protection should be incorporated into the SSTS control modes based on the critical load requirements and utility preferences and practices.

 Copyright © 2006 IEEE. All rights reserved.

7.2.14.3 DVR description and applications

The DVR is a solid-state dc-to-ac switching power converter that injects a set of three single-phase ac output voltages in series with the distribution feeder. By injecting voltages of controllable amplitude, phase angle, and frequency (harmonic) into the distribution feeder in instantaneous real time via a series injection transformer, the DVR can "restore" the quality of voltage at its load-side terminals when the quality of the source-side terminal voltage is significantly out of specification for the connected load equipment.

The reactive power exchanged between the DVR and the distribution system is internally generated by the DVR without any ac passive reactive components (i.e., reactors and capacitors). For large variations (deep sags) in the source voltage, the DVR supplies partial power to the load from a rechargeable energy source attached to the DVR dc terminal. The DVR, with its three single-phase independent control and inverter design, is able to restore line voltage to critical loads during sags caused by unsymmetrical line-to-ground, line-to-line, double line-to-ground, as well as symmetrical three-phase faults on adjacent feeders or disturbances that may originate many miles away on the higher voltage interconnected transmission system.

During normal line voltage conditions following the sag, the energy storage device is recharged from the ac system by the DVR. Even without stored energy, the DVR can compensate for the variations of terminal voltage due to load variations by injecting a lagging voltage in quadrature with the load current, thus providing continuously variable series capacitive line compensation. The DVR can also limit fault currents by injecting a voltage vector during the fault that opposes the source voltage and maintains the fault current to an arbitrarily low value.

Connection to the distribution network is via three single-phase series transformers, thereby allowing the DVR to be applied to all classes of distribution voltages. At the point of connection, the DVR, within the limits of its inverter, provides a highly regulated clean output voltage.

Some implementations of the DVR can also reduce the level of harmonic voltages on the feeder.

7.2.14.4 DSC description and applications

The distribution static condenser (DSC) is a solid-state dc-to-ac switching power converter that consists of a three-phase, voltage-sourced inverter. In its basic form, the DSC injects a voltage in phase with the system voltage, thus providing voltage support and regulation of VAR flow. Because the device generates a synchronous waveform, it is capable of generating continuously variable reactive or capacitive shunt compensation at a level up to the maximum power rating of the DSC inverter.

The DSC can also be used to reduce the level of harmonics on a line. The use of high-frequency pulse-width modulated inverters to synthesize the necessary signal allows the device to inject complex waveforms to cancel out voltage harmonics generated by nonlinear loads. The DSC can compare the line waveform with respect to a reference ac signal, to provide the correct amount of harmonic compensation. By a similar method, the DSC can also reduce the impact of some voltage transients.

When coupled with the SSB (installed on the line side of the DSC) and energy storage, the DSC can be used to provide full voltage support to a critical load during operation of the feeder circuit breaker that protects the distribution feeder on which the DSC is installed. In the event of a source disturbance or feeder circuit-breaker operation, the SSB isolates the DSC and the connected load downstream from the circuit breaker and the DSC supports the entire load from its energy storage subsystem. The amount of load that can be supported is determined by the MVA rating of the inverters and the length of time that the load can be maintained by the amount of energy storage provided.

The DSC can be connected to the distribution network via a standard distribution transformer, thereby allowing the DSC to be applied to all classes of distribution voltages. At the point of connection, the DSC, within the limits of its inverter, can provide a regulated stable terminal voltage.

Copyright © 2006 IEEE. All rights reserved.

7.3 Equipment specifications

Generation of the specification for the required power-enhancement product is a very important part of the procurement of the equipment. There are a large number of different specification items that are published by the manufacturers. Some of the items are of universal importance to all users, and some are of more interest in one application than another. The procurement specification should emphasize those specifications of particular interest for the application. Any items that can have the specification loosened should be treated appropriately in the procurement. In this way, the specification defines the system requirements without over-specifying. This approach helps assure the procured products are the best combination of performance and price for the requirements of the particular installation.

7.3.1 System load rating

A fundamental rating is the capacity of the system. For most power conditioning equipment, capacity is expressed in apparent power (kVA) and/or real power (kW). The power factor rating of any power conditioner should take into account the portion due to phase shift and the portion due to waveform distortion. The crest factor rating is the conditioner's ability to support nonlinear loads that have peak currents. If the load power factor is anything but 1.0, the real power (kW) that the system is supplying is less than the apparent power (kVA). Most systems are rated at a power factor between 0.7 and 0.9, meaning that the real power rating of the system is less than the apparent power (kVA) rating. Both ratings are important because neither can generally be exceeded at steady-state conditions.

7.3.2 Size and weight

The size of the system is important because of the cost or lack of floor space that is available for the system. The weight is important because of floor loading limitations as well as elevator ratings.

7.3.3 Installation cost considerations

There are a number of factors that affect the final cost of installing a power conditioner. These costs should be considered along with the purchase price and performance for each of the systems that are under consideration. Some of the factors that can affect the installation costs are discussed in 7.3.3.1 and 7.3.3.2.

7.3.3.1 Location of the installation

There are several options as to where a power line conditioner can be installed. Installation of smaller systems tends to be rather straightforward and the costs involved are usually not very great. Small UPS typically have sealed maintenance-free batteries that are installed inside the cabinet or can be placed right next to the UPS, which further simplifies the installation. The smaller systems generally feed a limited number of loads so that power distribution is less of a problem. The very small units typically have power receptacles into which the loads can be directly connected.

The installation of larger systems is different. These systems tend to be large and generate significant heat and noise. Stationary wet-cell type batteries associated with very large UPS require that numerous safety precautions be taken, resulting in very significant installation costs. Most of these wet-cell battery systems have to be installed in special rooms with eyewash stations, hydrogen ventilation, and acid spill containment.

Many of the factors that affect the cost of installation are based on the physical constraints that are placed on the installation by the available space. There are certain items that can be controlled somewhat to lower the cost of installation.

Many UPS products allow the entire system (power electronics, batteries, maintenance bypass, and output distribution) to be installed directly in the computer room near the load equipment, thus greatly simplifying

 Copyright © 2006 IEEE. All rights reserved.

the installation and reducing installation costs. However, the floor space in the computer room tends to be more expensive than other installation sites. Newer products tend to reduce the floor space required due to their more compact designs.

In addition, the efficiency of these systems tends to improve with each new generation. Since the heat loss is a function of the system's efficiency, the newer products tend to dissipate less heat than older ones. More emphasis is being placed on the noise level emitted by the system. The noise level is being reduced by use of baffling, newer fan designs, and switching techniques that place most of the noise above the audible range. These factors make these power products easier to place in areas that are also working areas for personnel.

7.3.3.2 Wire and circuit breaker costs

The cost of the electrical cabling and circuit breakers is a function of the current that the system draws and supplies to the loads. The efficiency of the system as well as its input power factor affects the amount of current that the system requires for a given load. The higher the efficiency and the power factor, the lower the input current of the system. In some cases these items can make a difference in wire and circuit breaker sizes that will have a significant effect on the installation costs.

The input and load voltages of the system have a large effect on the wiring costs. A 480 V input system will draw 43% of the current compared to a like 208 V input system. If possible, all larger systems should be fed from the highest practical voltage. Further, systems providing electrical isolation of the output often do not require an input neutral conductor, which further reduces the installation costs associated with the additional neutral wire, larger wireways, and derated phase conductors due to harmonic neutral currents.

The same is true for the load side. In most cases, the user does not have good control of the input requirements of the connected loads. However, even if the actual loads are 208 Y/120 V, it may be more economical to distribute the UPS output at 480 V (three-wire plus ground) and then step it down to 208 Y/ 120 V near the load. This is especially true for higher capacity systems, where there is a long distance between the UPS and the loads, or with nonlinear loads requiring derating (oversizing) of the phase and neutral wiring.

7.3.4 Audible noise

The amount of noise that is generated varies greatly from one system to another. The noise level is of great importance if the system is to be installed in or close to offices or people. Many systems are available with additional soundproofing or special enclosures to reduce the sound level emitted.

7.3.5 Utility interface considerations

7.3.5.1 Input voltage range

This is the range of input voltage that the system can operate over. The system should have full capabilities, including charging the battery over the range of input voltages. The wider the range, the more tolerant the system will be to fluctuations in the input line voltage.

7.3.5.2 Transient voltage withstand

Power conditioning equipment should have adequate transient voltage withstand capability to survive the expected transient voltage surge activity. IEEE Std C62.41™-1991 [B7] describes the transient voltage surge environment. The power conditioner should include transient voltage surge suppression to protect itself from voltage transients on its input as well as reduce the transient voltage surge at its output so as to protect the connected load equipment. Transient voltage surge withstand is specified as the transient voltage amplitude and duration using standardized surge voltage waveforms (and source impedances) that can be withstood without damage.

Copyright © 2006 IEEE. All rights reserved.

7.3.5.3 Inrush current

Inrush is the amount of current that a load draws when it is first energized. Inrush is generally caused by the magnetization requirements of transformers, charging of capacitors, or starting requirements of motors. Inrush must be considered when sizing the electrical feed to the system (circuit breaker size) and any power source, such as a standby generator system.

7.3.5.4 Input power factor

The input power factor of the system specifies the ratio of input kilowatt to input kilovolt-ampere at rated or specified voltage and load. The power factors of some conditioners are a function of the load power factor, and some are independent of the load. Those that are a function of the load may be specified for a unity power factor load that does not represent normal operation. In power systems that utilize phase-controlled rectifier inputs, the input power factor will become lower or less desirable as the input voltage is raised. Other rectifier designs are becoming available that can maintain a near unity power factor over their full operating range.

For a given load on the power conditioner, the lower the power factor, the more input current will be required by the system. The wiring to the system and the switchgear depends on the current that is drawn. All other aspects being equal, the power conditioner with a higher power factor over the operating range can have a lower installation cost. In some locations, the public utility may impose penalties for power factors less than some target value. If the power conditioner is a substantial portion of the total building load, a low input power factor of the power conditioner can contribute to the additional operating costs associated with any power factor penalties.

7.3.5.5 Input current distortion

The current that is drawn from the supply by many loads is not sinusoidal and contains frequency components that are harmonics of the supply frequency. The amount of distortion is specified as a percentage (square root of the sum of the harmonic current components squared as a percent of the fundamental component). Different power converter designs create different amounts of current distortion. This current distortion is translated into voltage distortion in proportion to the power source impedance. This voltage distortion can adversely affect other equipment that is powered from the same source. Lower levels of current distortion cause lower voltage distortions, and other devices are less likely to be adversely affected. Input current distortion is specified for a given set of conditions and can be affected by such factors as input voltage, load, input phase balance, and source impedance. Power sources with higher impedances, such as standby generator systems, cause a greater concern for current distortion.

7.3.6 Load compatibility considerations

7.3.6.1 Power capacity

There are several factors that may require the capacity of the power conditioner to exceed the steady-state load requirements. First, many loads require more current during starting than they do under normal operation. In a similar manner, some loads have periodic increased load (pulsing) requirements that should be taken into account when sizing the power conditioning system. In addition, the potential growth requirements in the near future should be considered. Load requirements typically grow with time, and various economies can be achieved if this growth is anticipated and accommodated during the initial planning.

The rating of the power conditioner may also vary with the type of load that is applied. Many modern loads have rectifiers or switching inputs that do not draw current in a linear manner at the input power frequency. This current distortion can cause additional stress on the power conditioner that in turn may affect the rating of the conditioner when supplying these loads. The conditioner manufacturer may specify a nonlinear load

 Copyright © 2006 IEEE. All rights reserved.

rating. The ability to support nonlinear loads can be stated as a "crest factor" that describes how much the load current can vary from a pure sine wave while maintaining the system's full rating. In the case of crest factor, a linear load has a factor of 1.4, which is the ratio of the peak value of a sine wave to its rms value. Therefore, a load with a crest factor rating of 2.8 has twice the peak current of a linear load. For dry-type transformers, a K-factor harmonic rating system (see UL 1561-1999 [B11]) has been devised where the individual harmonic currents are weighted according to their additional heating effects on the transformer.

7.3.6.2 Output voltage regulation

This specification defines the maximum change in the output voltage that should occur during all modes of operation. For power conditioners that do not actively regulate the output voltage, the output voltage regulation specifies the output voltage change from no load to full load with a given (constant) input voltage. For actively regulating power conditioners, such as UPSs, output voltage regulation should be specified for all combinations of load changes, input voltage variations (including the complete loss of input), and operating modes (including battery discharge). The acceptable input voltage range of the connected (protected) load equipment determines the acceptable limits for the regulation of the power conditioner.

7.3.6.3 Unbalanced load regulation

This specification gives the maximum voltage difference between the three output phases that occurs when individual phase loads are not balanced. This specification becomes important when serving three-phase loads that are sensitive to unbalanced voltages, such as motors where small voltage imbalances cause larger current imbalances. According to NEMA MG 1-2002 [B10], standard-duty motors should be derated for more than 1% voltage imbalance and not operated with more than 5% voltage imbalance. Voltage unbalance often occurs as single-phase loads are added to three-phase sources and load balance is not maintained. Often this specification is stated in percent unbalance in voltage for a stated unbalance of load. However, the calculation of percent unbalance can be different from one manufacturer to another. One method calculates the percent voltage unbalance as the greatest individual phase voltage difference from nominal expressed as a percent of nominal. Another method calculates the percent voltage unbalance as the highest phase voltage minus the lowest phase voltage expressed as a percent of the average phase voltage. Still another method calculates the percent voltage unbalance as the highest phase voltage minus the lowest phase voltage expressed as a percent of the nominal phase voltage. Similar variations in calculating the load current imbalance exist. *The Authoritative Dictionary of IEEE Standards Terms* [B4] defines *voltage imbalance* as the greatest deviation from the average expressed as a percent of the average of the three phases.

7.3.6.4 Output voltage distortion

This specification describes the maximum amount of voltage distortion that will be present at the output of the unit when connected to a linear load. A linear or resistive load is one that draws current from its source that is proportional to the voltage waveform. For equipment that does not generate the output voltage, such as a transformer, the specification is the voltage distortion added by the device, assuming an undistorted input voltage waveform. For equipment that generates the output voltage waveform, the specified output voltage distortion is independent of the input voltage distortion. The specification generally defines the total harmonic distortion as well as the maximum value of the largest harmonic that can be present. Most critical loads are not linear loads, so this specification does not reflect the actual distortion when the system is installed and powering the load equipment. Some power line conditioner and UPS manufacturers specify a value for output voltage distortion with nonlinear loads. However, without defining the exact type of nonlinear load, the specification is not comparable.

One cannot assume that the product that has the lowest distortion specification with a linear load will have the lowest distortion in a practical application with nonlinear loads. This is due to the differences in the output impedances of the power conditioners at the frequencies of the load's current distortion. It is advisable to test the power line conditioner with the intended load if the actual level of voltage distortion is critical. The resulting amount of voltage distortion can be estimated if one knows the amplitude and

Copyright © 2006 IEEE. All rights reserved.

spectrum of the load's input current distortion and the output impedance of the power line conditioner at those frequencies. However, often the load's actual current distortion is affected by the power source impedances and source voltage distortions, and becomes complex to model properly.

7.3.6.5 Dynamic response

The dynamic response of a power conditioner is defined as the deviation that occurs in the output voltage when a load step is applied to the output. Also associated with the magnitude of the deviation is the time that it takes for the output voltage to recover to within normal regulation limits. The specification is an attempt to quantify the disturbance that will occur on the output when a load is applied. If the disturbance is too large, the load that is being started or other loads that are already being fed from the same bus may be adversely affected. The size of the disturbance is usually proportional to the percentage that the load is changed. The recovery time is a measure of how fast the system can respond.

The dynamic response is often specified for partial and full load steps. The smaller the deviation and the faster the output voltage recovers to normal, the less likely that the loads will be affected. Most computer systems and other critical loads state the maximum voltage deviation that they can withstand. The load equipment manufacturer's recommendations should be strictly adhered to.

Dynamic response can be particularly important if the power system configuration allows for large load steps, such as with isolated redundant UPS systems or applications with STSs where large load steps can be instantly switched from one power source to another.

7.3.6.6 Transfer time

Certain power conditioners transfer the load from one source to another, such as a standby power supply or UPS when it transfers the load from input power source to inverter operation or back again. The transfer time is the total time that it takes to transfer the critical load from one source to the other. For automatic transfers, such as a standby power supply sensing a power failure or a UPS sensing an inverter failure, the transfer time should include the time required to sense that there is a need to transfer the load. Once sensed, with solid-state switches, it takes only a few microseconds to execute the transfer. With electromechanical switches, such as used in many standby power supplies, the transfer time can be milliseconds. It is important that the connected load equipment is compatible with the worst-case sense and transfer time of the power conditioner to avoid load upsets. For example, common ac relays have been found to be susceptible to transfer times as brief as 2 ms, making the 4 ms sense and transfer time of many standby power supplies unacceptable.

7.3.6.7 Overload capacity and duration

This is a measure of how much margin is designed into the system. This extra capacity is needed to clear faults and provide additional current for starting various loads. Some products exhibit very poor characteristics, which include high distortion and poor voltage regulation, during periods of overload.

7.3.6.8 Load isolation

One of the fundamental functions of a power conditioner is to prevent its load from being subjected to electrical noise and other disturbances that are present on the input power source. The power conditioner's ability to isolate the load from noise is usually expressed in decibels (dB) of attenuation and different values are given for common- and normal-mode noise at various frequencies. The higher the numerical value of the isolation, theoretically the better the load is protected. Very high levels of noise attenuation for the power conditioner are difficult to practically obtain for an installed power system due to the lack of commensurate shielding and isolation in the rest of the power system wiring and grounding.

 Copyright © 2006 IEEE. All rights reserved.

Galvanic load isolation is the electrical isolation of the power conditioner's input from output, such as by an isolation transformer where there is no direct electrical path from input to output. Galvanic isolation allows the power conditioner to be a separately derived source with a local reference for the power system (such as a neutral-to-ground bond).

7.3.6.9 Automatic forward and reverse transfer operation

It is important that the UPS system be able to automatically transfer in both directions. Many UPS systems rely on the bypass (utility) source to supply currents that exceed the capacity of the inverter. If the UPS automatically transfers the load to bypass due to a momentary overload, it is important that the UPS also have the capability to allow the load to be automatically returned to the inverter once the load current has returned to within the inverter's capabilities, to avoid unnecessary exposure to the unconditioned bypass source.

7.3.7 Cost of operation considerations

There are a number of power conditioner specification items that affect the cost of operation of the system. These items are of interest to almost all commercial installations as they are ongoing costs that often represent a higher cost than the equipment's acquisition and installation costs.

7.3.7.1 Maintenance costs

All power systems require some preventative maintenance. This includes checking of the electrical connections within the unit as well as external to the unit, such as the connections between the batteries or to circuit breakers, cleaning, recalibration, and general diagnostics. If the installation includes wet-cell batteries, their specific gravity, voltages, and impedances should be measured and recorded. These periodic maintenance activities can be covered by the manufacturer's maintenance agreements.

7.3.7.2 Efficiency

The efficiency of a power system is the relationship between the real input power that it draws and the corresponding real output power supplied to the load (kilowatt out/kilowatt in). The efficiency tends to vary with load levels. A value should be obtained for the anticipated load level on the system reflecting the expected operating conditions of the system. The conditions under which the efficiency is measured should have all fans, power supplies, etc., operating along with all capacitor bleeder resistors, snubbers, and other power dissipating devices connected. The efficiency should accurately reflect the actual operating conditions, including such items as supplying the normal float current into the battery bank, operating nonlinear loads, and operating with unbalanced, high or low input voltages.

7.3.7.3 Air conditioning requirements

These requirements are a function of the efficiency of the system and must be considered when sizing the air conditioning system for the installation. The heat loss is generally specified in British thermal units per hour (Btu/h) or kilowatts. Also included is the recommended operating temperature and humidity range that determines the kind of air conditioning or ventilation system that will be required. For UPS systems, the battery has a much narrower operating temperature range than the UPS equipment.

7.3.7.4 Reliability

The overall reliability of the system will impact its total operating cost. A system that is more reliable will typically cost less to maintain and will cause fewer failures in the critical bus. It is sometimes difficult to assess the costs of down time and power-induced failures in the critical loads. These costs vary so much from one installation to another that guidelines are even difficult to create. It is safe to say that unreliable

Copyright © 2006 IEEE. All rights reserved.

operation can offset any cost advantages or other performance features of a product. An unreliable system is undesirable no matter what other positive features it may have.

7.3.8 Reliability considerations

When one considers the purchase of a power conditioner to protect a critical load, a primary concern should be the reliability of the system. The principal function of the system is to supply quality power to the critical load in a continuous manner. There are many items that affect the overall reliability of the system. Some of these are discussed in the following subclauses. Other factors to be considered are a function of the overall power system configuration (see 7.2.12.4).

7.3.8.1 Product reliability

Many factors are involved in making a product as reliable as possible. These factors include design, component selection, workmanship, and conservative rating of the units. Further, the proper application of the product in the intended environment and within its ratings is also a major factor in reliability of the product. It is very difficult to look at a product and determine its potential for reliable operation. Estimating the relative performance of various products usually requires sorting through reliability information from manufacturers.

7.3.8.2 Calculated reliability mean time between failures

Most manufacturers calculate the reliability of their systems in the manner that is prescribed for military products. The process involves determining the basic reliability of each component that goes into the system. The reliability estimate is based on field experience and accelerated life testing. The stress that is placed on the device in the application needs to be taken into consideration. Once the reliability of each component is estimated and the total number of each is known, the total system reliability can be estimated. The overall reliability of a system is usually expressed as the MTBF. The MTBF is usually expressed in hours and specifies the average number of hours that can be expected between failures in the system.

The calculated MTBF is only an estimate and may not really define the actual reliability of the product. The inaccuracies come about due to the many variables that are hard to determine. Such items as the stress (peak and average current and voltages, and junction temperatures) on the devices are often hard to determine accurately. Other factors associated with the design are almost impossible to estimate accurately, such as noise susceptibility, effects of accumulated dust combined with humidity, and the thoroughness and correctness of the design. Improper reactions of the system to faults or disturbances can cause the system to fail, but are not included in component reliability. Proper maintenance and installation are also often assumed in MTBF calculations. In general, calculated MTBFs should be used as guides when actual field data are not available.

7.3.8.3 Field reliability data

Once a product has been in the field for a period of time, an accurate determination of the operating reliability can be made. This procedure involves keeping track of the number of hours that the installed base of units has operated and the total number of failures that have occurred. MTBF data derived this way can be used to compare the reliability of various systems. Ensure that the numbers from the different manufacturers are derived by the same methods. There are three reliability figures of merit for UPSs that should be compared, as follows:

a) Individual module

b) Multimodule

c) Total system

 Copyright © 2006 IEEE. All rights reserved.

First, the reliability of the individual unit or module should be examined. This figure of merit is a measure of how often service will be required and should provide the means to determine the relative service costs between products.

The second figure of merit is the reliability of a multimodule, redundant system output. (How often did the power system itself fail to provide power that was within specifications?) This figure of merit can be difficult to determine unless a line-disturbance monitor is installed on the critical-load bus. Typically, the frequency of system failure (that required the critical load to be powered from the utility or alternate source) can be determined. This frequency shows how well the manufacturer's methods of providing redundancy actually perform in the field. The ratio of the module reliability and the multimodule redundant system reliability is important. Systems that have effective methods of isolating a failed module before it degrades the critical bus show higher ratios between the system and the module figures of merit. In most applications this is an important factor because it reflects how well the load can be supported by the system, independent of the quality of the input power. This ratio is what actually justifies the purchase of a UPS.

The third reliability figure of merit is the most commonly stated. This figure-of-merit is the total system MTBF, including the STS that connects the critical load to the utility in the event of a complete failure of the UPS. The difference between this parameter and the previously discussed ratio gives an indication of how well the STS logic functions and how well it is integrated into the entire system. The number is somewhat dependent on the reliability of the bypass source, so it will vary with the installation. This parameter does not distinguish between the time that the critical load is powered from the UPS output and the time that it spends on the bypass source. This factor is important as it reflects the ultimate reliability of power available for the critical load.

7.3.8.4 Manufacturer's experience

The field reliability data discussed previously requires that the manufacturer have a large number of products installed in the field for a long enough period of time to give an accurate assessment of the products' reliability. When a new product enters the marketplace, the only data that exist is the calculated MTBF, which is only an estimate of what the actual reliability should be in the field. The actual (demonstrated) system reliability will not be known until sufficient field experience is obtained.

If the product is one that has been on the market for a number of years, the reliability should be determined from manufacturer's data and through contacts with users of the product. It is always a good idea to contact organizations that have used the product for a number of years to see what kind of reliability and general experience they have had with the product and the manufacturer. Since reliability may vary from one application to another, it would be good to talk to organizations that have similar quality of input power and similar equipment on their critical bus.

If the product is new to the marketplace, the user will have to rely on calculated reliability data and very thorough testing of the product before it leaves the factory as well as after it is installed on site. The manufacturer should demonstrate control of the product configuration and its production processes. A comprehensive quality assurance program, such as ISO 9001:2000 [B9], should be in place. A purchaser of a new product should review the technical aspects of the manufacturer's operation and be convinced that quality control really exists.

7.4 Procurement specifications

7.4.1 General discussion

The purpose of an equipment and/or material specification is to describe technical performance and physical requirements for a piece of equipment or system that is desired by a customer or user. Typically the specification serves as the technical portion of a purchasing contract. The purchase order defines the

Copyright © 2006 IEEE. All rights reserved.

business terms of the agreement. The most important aspect of the specification is how well the buyer understands the value of what is described. Specifications do not have to be lengthy and complex to be effective.

7.4.2 Using vendor-supplied specifications

The most common method of developing a specification is the use of a manufacturer-prepared product specification. Unless a qualified consulting engineer or experienced user is involved, the use of a vendor-supplied specification is the only way to give a detailed description of the product desired. However, it must be kept in mind that a particular vendor-supplied specification describes the vendor's product in great detail. Other vendors or manufacturers of a similar product may object to this practice since the specification favors another vendor. In some cases, they may be reluctant to offer a proposal or bid because they feel the buyer has made his choice of product by virtue of the specification used.

The use of vendor-supplied specifications does not have to reduce the competitive process. The person responsible for the procurement can promote competitive responses by encouraging other vendors to make a proposal for their similar product. A serious competitor will take the time to respond to another manufacturer's specification, pointing out the differences between that product and the specified product.

The use of specifications is essential to the procurement process. The buyer can effectively use vendor-supplied specifications "as supplied" or modified, depending on how well the specification describes the product desired. Careful review of the specification prior to issuance will minimize conflict and maximize the value received.

7.4.3 Creative specifications

Writing an effective specification for the procurement of a product or service is a difficult task. The writer must first determine exactly what he or she is trying to procure: a specific product for a specific task or a generic performance criterion. Unless the requirements are unique or custom in nature, a "performance" type specification will generally provide the best results. By accurately describing the desired performance parameters rather how the performance is to be accomplished, more than one vendor or manufacturer can respond with meaningful proposals.

Writing a specification to cover a unique or special situation should be avoided, if possible. In the majority of cases where special products are deemed necessary to provide a service or solve a problem, a commercial product or service actually exists for that purpose. In most cases, it would be beneficial for the custom specification to permit consideration of other approaches to meet the requirement.

7.4.3.1 Specification conflicts with standard products

The unique specification deviations from standard products can be significant. Major product changes may totally discourage vendors from bidding. The important task is to determine if the unique requirements are necessary and whether or not standard products may be acceptable.

7.4.3.2 Unknown performance/reliability characteristics

Unique specifications that require extensive modification of standard products may result in reduced performance or reliability. In the case where a totally new or substantially modified product results, the known "track record" or performance history of a standard product is eliminated. Long-term benefits of standard products may be more important than a unique feature that requires extensive modification.

 Copyright © 2006 IEEE. All rights reserved.

7.4.3.3 Long-term maintenance problems

Requiring a unique product by definition means that a "one-of-a-kind" product may result. Typical commercial manufacturers cannot provide their normal degree of engineering or support documentation that accompanies standard products. The most serious consequence is inadequate spare parts and field service once the product is in use. The long-term result may be reduced to unreliable performance later in the product life cycle or premature replacement of the product in total.

7.4.3.4 Electrical safety listing avoidance problems

One of the most serious ramifications of custom product specifications is the absence of product listings [Underwriters Laboratories (UL), ETL, Canadian Standards Association (CSA), etc.] designed to ensure safe operation. The requirements of these agencies demand extensive testing to ensure compliance with accepted standards. Even minor changes can sometimes impact the product listing and may result in the local authority (electrical inspector) refusing to approve the product's installation or operation.

7.4.3.5 Increased liability problems

Use of a unique specification can conceivably increase or involve the purchaser in the liability associated with a failure of a special power system. In the case of liability claims, standard products with a proven track record are the responsibility of the manufacturer if the product was applied or used properly. Development of a unique product may relieve the manufacturer of a portion of his liability if a major problem develops.

7.4.4 "Mixed" vendor specifications

When the standard specifications of several vendors are available, there is a strong temptation to select the best features and functions from each vendor and combine these into a single specification. Even though the chosen feature from each source is a standard item for that vendor, the overall specification ends up being very unique. The most typical occurrence of this situation is with functional items, such as operator controls, alarms, status indicators, and other individual components.

Each manufacturer can generally recognize the specific features of his competitors used in the specification. Getting each vendor to address the specification in detail becomes more difficult. Generally too much time and effort are spent on "selling against" items in the specification rather than on user benefits. This approach generally leads to greater confusion on the part of the purchaser, and in turn, makes a value selection more difficult.

7.4.5 Generic specifications for multiple vendors

A true generic specification that can be proposed by more than one vendor is possible. A specification that addresses the functions or results desired from a product is typically called a *performance specification*. This type of specification concentrates on how each system would perform in the critical areas rather than how the performance is accomplished. In the case of a UPS system, as an example, the main performance issues would be the following:

a) Capacity rating (both kVA and kW)
b) Input and output voltages
c) Dynamic response (voltage regulation)
d) Overload capability
e) Input current distortion
f) Input power factor
g) Battery back-up time
h) Electrical isolation

Copyright © 2006 IEEE. All rights reserved.

i) Efficiency

j) Controls and monitoring

k) Installation environment

l) Support items

In a performance specification, the hardware items allow vendors to present the ways in which their product satisfies the specification. The support items or "software" (test procedures, quality assurance, start-up services, maintenance agreements, etc.) can be tailored to the specific project. These items determine the degree of support required on a project-by-project basis.

7.5 Verification testing

For large systems where the effort and expense of verification testing is justified, there needs to be some method devised to determine that the product being procured does in fact meet the specifications for which it was purchased. This function is usually performed through acceptance testing at the manufacturer's facility before shipment and on-site after installation. It is difficult to totally test a power conditioning system in a factory situation. The best that can be done is to test each of the key performance features of the system as completely as possible. The manufacturer can supply what he or she considers to be a valid test of the product's performance, which then can be modified to cover those items of particular importance to the specific installation. Large, complex, or critical systems should undergo a burn-in at the factory and/or on-site before the system is placed in service with the critical load.

7.5.1 Factory testing

The factory testing should verify that the power conditioner meets all of its significant specifications in the environment of the manufacturer's test facility. Manufacturers that have certified quality control systems, such as ISO 9000:2000 [B8], should have comprehensive testing and verification processes in place to ensure that the product meets the manufacturer's specifications and is free of manufacturing defects. For large, complex, or critical products, users or their representatives may elect to visit the manufacturer and witness the testing of their product.

Factory quality control tests should not be confused with design verification tests. According to quality standards, commercial products should undergo extensive product testing to verify the design performance. These tests are often conducted on engineering samples or pre-production units and include safety agency and abnormal testing. Factory quality control tests are often a limited subset of these tests to verify conformance of the production unit to the design criteria and to detect any manufacturing defects.

The following subclauses describe some of the tests that can be performed in general terms. The unit under test is assumed to be a UPS. The tests can be deleted or modified to accommodate the type of equipment being tested.

7.5.1.1 Visual inspection

A qualified individual can gain insight by simply looking at the components used in the power conditioner and the methods and workmanship of assembly. The trained individual should inspect to see that the cabinets are of adequate strength to withstand the stresses of transportation, installation, and seismic activity. Components should be high quality and properly mounted to assure mechanical security and adequate heat transfer. The wiring should be of the proper rating, properly terminated, and secured to prevent damage. Bus bars should be properly mounted and braced to resist movement during fault conditions. These areas and others are significant to the long-term reliability of the product.

 Copyright © 2006 IEEE. All rights reserved.

7.5.1.2 Load tests

This test should be performed to verify that the power conditioner is correctly connected and all functions operate properly. The test should include adding blocks of load in 25% increments to full load at a specified power factor. Observe and record the output voltage amplitude, waveform, steady-state regulation, dynamic response, and frequency. Check the operation of all controls, meters, and indicators.

7.5.1.3 Transfer test

This test should be performed to verify that the system will transfer from the inverter to the alternate source and back without generating disturbances on the load bus beyond specified limits. At no load and at full load, manually transfer the load to bypass source and then back to the system. Observe and record the same parameters as in the load test in 7.5.1.2. In addition, the transfer time in each direction should be determined and recorded.

7.5.1.4 Synchronization test

This test should be performed to verify that the system is able to synchronize to alternate sources within the specified limits. The frequency or phase angle of the alternate source should be varied outside of acceptable limits. An attempt to manually transfer to this source should be made. The alternate source should then be returned to nominal frequency or phase angle, and after the specified synchronization time, a manual transfer should be attempted. Observe and record the same parameters as in the load test in 7.5.1.2.

7.5.1.5 AC input failure and return test

This test should be performed to verify battery operation. Often this test is only performed as part of the site acceptance testing when the installed battery system is available. For factory testing, the ac input fail test can be conducted to verify proper SPS or UPS equipment response. Perform this test by interrupting and restoring the ac power source to the SPS or UPS. Observe and record the same parameters as in the load test above. The system should be allowed to operate from the battery, at rated load, to determine performance and verify specified battery time.

7.5.1.6 Efficiency test

This test should be performed to verify that the power conditioner is operating at the specified level of efficiency. The ac-to-ac efficiency of the UPS shall be measured and recorded at full and partial loads, with the battery fully charged. This is done by measuring the real power input and output and dividing the two figures. Very accurate instrumentation is required to properly measure equipment efficiencies. If two sets of power meters are used to measure input and output power, the measurements should be conducted twice (with the power meters connected input and output and then vice versa) and the efficiency results averaged to eliminate metering errors.

7.5.1.7 Full load performance test and burn-in

This test should be performed to verify that the UPS has the specified capacity. Tests should be performed at full load and rated power factor with the output voltage set to its maximum rated level and at the lowest specified dc bus voltage. Duration of the test shall be long enough for the equipment operating temperatures to stabilize. Record the output voltages, output currents, frequency, and key component temperatures.

7.5.1.8 Load imbalance test

This test should be performed to verify that the power conditioner is capable of supplying unbalanced loads per specification. For three-phase systems, the phase-to-phase and phase-to-neutral voltages and phase displacements should be measured and recorded with a balanced full load on the system output. The

Copyright © 2006 IEEE. All rights reserved.

maximum specified load imbalance should be applied and the same parameters should be measured and recorded.

7.5.1.9 Overload capability test

This test should be performed to verify that the power conditioner is capable of supplying the specified overloads. The maximum specified overloads (current and time) should be applied to the system, and its output voltages and current should be measured and recorded.

7.5.1.10 Harmonic input current test

This test should be performed to assure that the power conditioner does not generate harmonics in excess of specification. The harmonic content of the input current and the input voltage should be measured and recorded at full and partial loading.

7.5.2 Site acceptance testing

The on-site acceptance should verify that the system has not been degraded by the transportation and installation at the new site. It should further verify that the system functions properly in its new environment with the actual load that it was intended to support. This phase of testing is very important because it determines if all of the effort that went into the specifying and earlier testing has actually resulted in a system that will perform the desired function.

7.5.3 Solution verification testing

After site acceptance testing, the solution verification testing should be conducted to verify that the system is actually performing the desired power quality solution. This testing can be implicitly done by observing the absence of the power quality problems or their effect on the load equipment, or the testing can be explicitly done with similar monitoring equipment used to detect the power quality problem. Typically monitoring equipment is connected to the power conditioner's input and output to detect the proper power conditioner performance. Permanent monitoring equipment is becoming more popular as its costs have declined to provide long-term solution verification.

7.6 Equipment maintenance

7.6.1 Preventative maintenance

It is generally accepted that equipment with moving parts requires periodic maintenance in order to assure reliable operation. Such items as cleaning, lubrication, and adjustments for wear are common in the upkeep of mechanical equipment. What may not be as obvious is that power electronic equipment requires periodic maintenance as well. A proper schedule of periodic inspections will enhance the equipment's reliable operation.

The following list outlines some of the operations that are performed during preventive maintenance of power conditioning equipment:

a) Check security of all electrical connections (including batteries)
b) Clean units and batteries and replace air filters
c) Check battery cell voltages and specific gravity (wet cells)
d) Lubricate components as required
e) Visually check power connections and components for signs of overheating, swelling, leaking, etc.
f) Perform calibration of meters, alarm levels, etc.

 Copyright © 2006 IEEE. All rights reserved.

g) Functionally check the operation of all components
h) Perform system performance checks

The preceding list is for illustration only; the manufacturer's recommendations should be followed strictly. By performing this type of maintenance on a scheduled basis, it is possible to find and remedy potential problems before the system's operation is affected.

7.6.2 Wear and aging of components

We have come to expect that mechanical components wear during operation. This wear can usually be seen or measured. Some electrical components "wear" during operation as well, but it is sometimes more difficult to detect.

Rotary or M-G products experience wear in their bearings and, in some cases, brushes. Fan motors also experience bearing wear. Circuit breakers, switches, and contactors experience wear in their mechanisms as well as the electrical contacts. Many components, such as motors, transformers, and capacitors, experience degrading of internal insulation over their life.

The rate of degradation is a function of the design of the component and the level of stress to which it is subjected. A given component may have a much longer operational life in a conservatively designed product than it would in a design where its stress level is higher. The design stress level of a component is related to how close the component is operating to the manufacturer's maximum specifications. Typical parameters involved include peak voltage, rms current, and temperature and power limits. In most cases, the designed stress level interacts with the operational environment to determine the ultimate life of the component. High-temperature environments tend to shorten the life of nearly all components. The life of some components, such as electrolytic capacitors and batteries, are greatly affected by operation at elevated temperatures.

7.6.3 Restoring system operation after failure

There will be failures even in a well-maintained system. When failures occur, it is important to take the proper steps to restore the system operation as soon as possible. The following lists the general order of events that should occur when there has been a failure:

a) Determine what has failed and why it failed
b) Restore power to load through the use of maintenance bypass switchgear or other means
c) Replace or repair the failed component or assembly
d) Restart the system and perform operational checks
e) Place the system back in service

If the critical load has lost power, the first priority is to restore power. This is often performed through use of bypass switchgear that connects the utility power directly to the load. It is generally advisable to close a manual bypass switch even if the load is being supplied through a static switch or other automatic switch.

Clearly the next step is to determine what has failed in the system. Modern power conditioning systems provide alarm annunciation, and some provide effective diagnostics to help identify the source of the problem. The ease of determining what has failed and the actual repair of the system varies with its design. It is typically easier to isolate the problem and to replace complete assemblies as opposed to individual components. System designs that have made good use of modular repair concepts generally are easier and faster to put back in service.

The second part of this step is to determine why the failure has occurred. There is normally a cause for each failure, and it needs to be determined and dealt with to avoid recurrences of the same failure. This can be difficult because the cause is often transient and no longer present. The source of the problem could be

Copyright © 2006 IEEE. All rights reserved.

internal to the equipment, in the utility feed, the building power distribution, or the load itself. It is often not possible to devote the time necessary to determine the cause because of the need to restore the system to operation. In that case, steps should be taken after the system is in service to determine and eliminate the source of the failure.

Once the failed part or assembly is identified and repaired or replaced, it is advisable to perform sufficient operational tests to assure that all areas of the system are now functioning properly. Other components may have been damaged and need to be repaired. Once the system is fully checked out, it can be placed back in service. Accurate records of the failure and all associated data should be kept to aid in any future correlation of this failure with others. The actual cause of the failure may not be determined until the data from this failure is compared to other failure data and operational records.

7.7 Bibliography

Additional information may be found in the following sources:

[B1] EPRI PQTN Application No. 10, "Sizing Constant Voltage Transformers to Maximize Voltage Regulation for Process Control Devices," EPRI PEAC, Knoxville TN, Feb. 1994.[2]

[B2] FIPS Pub 94-1983, Guideline on Electrical Power for ADP Installation.[3]

[B3] *Fuel cell technology* at http://www.ballard.com/be_informed/fuel_cell_technology.

[B4] IEEE 100, *The Authoritative Dictionary of IEEE Standards Terms*.[4, 5]

[B5] IEEE Std 446-1995, IEEE Recommended Practice for Emergency and Standby Power Systems for Industrial and Commercial Applications *(IEEE Orange Book)*.

[B6] IEEE Std 449-1998, IEEE Standard for Ferroresonant Voltage Regulators.

[B7] IEEE Std C62.41-1991, IEEE Recommended Practice for Surge Voltages in Low-Voltage AC Power Circuits.

[B8] ISO 9000:2000, Quality Management Systems—Fundamentals and Vocabulary.[6]

[B9] ISO 9001:2000, Quality Management Systems Requirements.

[B10] NEMA MG 1-2003, Motors and Generators.[7]

[2]EPRI PQTN briefs are available by contacting the EPRI Solutions Inc. pubs manager or at www.epri-peac.com.

[3]FIPS Pub 94-1983 has been withdrawn; however, copies can be obtained from Global Engineering, 15 Inverness Way East, Englewood, CO 80112-5704, USA, tel. (303) 792-2181 (http://global.ihs.com/).

[4]IEEE publications are available from the Institute of Electrical and Electronics Engineers, Inc., 445 Hoes Lane, Piscataway, NJ 08854, USA (http://standards.ieee.org/).

[5]The IEEE standards or products referred to in this subclause are trademarks of the Institute of Electrical and Electronics Engineers, Inc.

[6]ISO publications are available from the ISO Central Secretariat, Case Postale 56, 1 rue de Varembé, CH-1211, Genève 20, Switzerland/Suisse (http://www.iso.ch/). ISO publications are also available in the United States from the Sales Department, American National Standards Institute, 25 West 43rd Street, 4th Floor, New York, NY 10036, USA (http://www.ansi.org/).

[7]NEMA publications are available from Global Engineering Documents, 15 Inverness Way East, Englewood, CO 80112, USA (http://global.ihs.com/).

 Copyright © 2006 IEEE. All rights reserved.

[B11] UL 1561-1999, Dry-Type General Purpose and Power Transformers.[8]

[B12] Woodley, N. H., Sarkoze, M., Sundaram, A., and Taylor, G. A., "Customer Power: The Utility Solution," *International Conference on Electricity Distribution,* Brussels, Belgium, May 1995.

[8]UL standards are available from Global Engineering Documents, 15 Inverness Way East, Englewood, CO 80112, USA (http://global.ihs.com/).

Copyright © 2006 IEEE. All rights reserved.

Chapter 8
Recommended design/installation practices

8.1 Introduction

The proliferation of electronic load equipment in industrial and commercial environments has placed a demand on all parties involved in the design and installation of electrical systems to provide reliable power, grounding, and electrical protection for these devices. This demand is compounded by the fact that most electronic load equipment in these facilities are interconnected via metallic data/telecommunications cables that also require special design and installation considerations. This chapter deals with engineering principles that relate to performance requirements of modern electronic load equipment. Recommended practices may appear to restrict certain design, installation, or service efforts. Such restrictions are generally necessary to promote the desired performance levels of electronic load equipment within the confines of applicable local, state, and federal codes and regulations. Other standards and recommended practices may also be applicable. To assure all codes and regulations are met, prudent designers, installers, or service people should determine what specific codes or regulations apply at the location prior to proceeding with design or installation work.

Desired performance of electronic load equipment typically depends on various items, such as the proper selection and arrangement of the electrical distribution system, the proper selection and installation of electrical distribution equipment, the proper selection and installation of a grounding system for both the electrical power system and the electronic load equipment, and the proper selection and application of surge protective devices (SPDs).

Successive generations of electronic load equipment are more and more immune (to some degree) to recognized susceptibility problems. A good example is electronic load equipment manufactured to meet European Community 1996 electromagnetic immunity requirements. As such, some electronic load equipment may in fact be fairly immune to recognized electrical disturbances occurring at typical magnitudes. For example, electronic load equipment using a nonmetallic interface (such as fiber optics) may work satisfactorily in a quite electrically hostile industrial environment. Electronic load equipment that is less susceptible to electrical disturbances is desirable, but it does not alleviate adherence to the recommendations given in this recommended practice.

Distributed electronic load equipment such as computer networks and telecommunications circuits are further subjected to disturbances arising from voltage differentials between different grounding locations and different power sources. These conditions are covered in Chapter 9.

Electrical distribution systems serving commercial and industrial environments should be designed to support modern nonlinear electronic load equipment. Some equipment may specifically generate harmonic load currents that can adversely affect system components designed for sinusoidal load currents. Harmonic load currents act on the impedance of the electrical distribution system to create distortion of the voltage waveform. The magnitude of the voltage distortion will typically depend on the magnitude and harmonic profile of the load current as well as the impedance of the distribution system and the power source. Both single-phase and three-phase electronic load equipment can generate harmonics. Three-phase electronic equipment [such as variable-frequency drives and uninterruptible power supply (UPS) systems] can cause excessive voltage notching due to the commutating action of converter elements. Single-phase electronic equipment (principally switched-mode power supplies) can cause “flat-topping” of the voltage waveform due to nonlinear characteristics of high peak currents and associated large crest factors. Some loads are capable of creating significant voltage waveform distortion that may affect the entire electrical distribution system at the premises. In some cases, the current waveform distortion may affect the electric utility system. In these situations, other electronic load equipment and/or other loads may be adversely affected by the resulting distorted voltage waveform. These effects can include equipment/component damage, operational

Copyright © 2006 IEEE. All rights reserved.

problems, and the inability of the equipment to be properly powered. Electronic equipment may contain internal circuits that monitor the system voltage waveform for the purposes of timing, or detecting an impending power failure or other out-of-specification power quality parameters. Distorted voltage waveforms may cause equipment to go into unwanted operational modes such as automatic shutdown. In addition, sensing circuits may produce memory overflow conditions or slow down equipment operation due to repetitive logging of power quality anomalies.

8.1.1 Safety

Electrical safety is the overriding concern of all electrical design work. Safety is basically governed by the electrical codes and standards as adopted by government agencies, commercial entities, and good engineering judgment on the part of the designer. Safety requirements cannot be compromised to satisfy the special power and grounding requirements of electronic load equipment. Equipment manufacturer's requirements must not take precedence over safety requirements. In general, equipment that cannot operate in a satisfactory manner without violating applicable electrical safety requirements is not suitable for use in typical applications. Such equipment is considered to be designed improperly. As such, the equipment should be properly modified by its original equipment manufacturer, or authorized field service or engineering personnel so that it can work in a safe manner. The equipment should not be placed into service if the wiring and installation does not meet all applicable safety codes and regulations.

The exclusive use of electrical and electronic equipment that is covered by a product safety test or nationally recognized testing laboratory (NRTL) listing is generally the first line of defense against electrical safety problems. With very few exceptions, the use of listed equipment is also required by applicable electrical codes, such as the National Electrical Code® (NEC®) (NFPA 70, 2005 Edition).[1] The equipment should be installed and used for the specific purpose for which it was listed. Listed equipment is normally intended for attachment to a power system that is installed in compliance with the NEC. Factory tests performed by the original equipment manufacturer (OEM) are typically conducted with the subject equipment connected to a power system that is compliant with the NEC. Performance of equipment on a power system that is not compliant may not be satisfactory.

8.2 Equipment room wiring and grounding

Unless otherwise defined, the term *equipment room* shall be used to describe rooms housing computer-based equipment such as information technology equipment (ITE) or data processing equipment. Creation of an equipment room that meets the requirements of Article 645 of the NEC permits the designer to utilize flexible wiring methods within the room that would otherwise not be permitted. Related design information is also presented in NFPA 75. It is recommended practice that an equipment room, per Article 645 of the NEC and NFPA 75 descriptions, be created and maintained where large electronic systems, information technology systems, or automatic data processing systems are to be installed.

8.2.1 NFPA 75

This document provides specific requirements for interconnecting cables and other items used in conjunction with the NEC. It also cross-references the NEC, NFPA 780, and numerous other important NFPA references. NFPA 75 does not apply to areas other than designated equipment rooms and their directly related support areas (e.g., media storage areas).

8.2.2 UL 1950

This standard has provisions for listing power conditioning, distribution, and control equipment that are

a) Connected by ac branch circuits (not feeders) under 600 V rating;

[1]Information on references can be found in 8.8.

 Copyright © 2006 IEEE. All rights reserved.

b) Not installed as a part of the premise mechanical or electrical systems; or

c) Installed only as a UL 1950 listed part of a listed electronic computer/data processing system that is comprised of a single or multiple vendor-provided set of electrical or electronic load units.

UL 1950 also contains the listing requirements for all interconnecting cables for listed units of the electronic computer/data processing system. Cord assemblies and interconnecting cables listed to this standard are specifically stated to be suitable for installation within the space under a cellular raised floor, with or without that space being used for heating, ventilation, air conditioning, and process cooling airflow (see 1.5 of UL 1950).

8.3 Electrical power system selection considerations

Reliable and proper operation of electronic load equipment depends on providing an electrical distribution system specifically designed and installed to meet the power and grounding requirements of the equipment. The electrical distribution system should also be arranged to minimize service interruptions; provide flexibility for growth and maintenance; and provide continuous, reliable power under all desired conditions. All parties involved in the design, construction, and installation of the facility should consider all interrelated items, including selection of power system voltage, arrangement of the electrical distribution and branch circuit systems, connectivity of electronic systems, analyses of electrical system and load interactions, and compatibility of alternate/emergency/standby power systems. Additional considerations include the environmental friendliness and energy efficiency of the power system.

8.3.1 Selection of system voltage

The selection of the ac supply system voltage typically begins at the service entrance of the facility. In most commercial environments in the U. S., the utility supplies three-phase power at 480 Y/277 V (or 600 Y/347 V) or 208 Y/120 V. In industrial environments, the utility may supply three-phase power at even higher voltages such as 4160 V, 13 800 V, and higher. The magnitude of the voltage will typically depend on the size of the facility, the load conditions, and the voltage ratings of the utilization equipment in the facility. In some cases, the facility owners may design, install, and maintain their own medium-voltage electrical distribution system. Refer to 8.3.2.1.1 for a list of the different power system arrangements typically utilized in site distribution systems.

Recommended practice is to provide distribution power in most facilities at 480 Y/277 V (or 600 Y/347 V) rather than at the actual utilization equipment level of most electronic load equipment (208 Y/120 V). Electrical distribution systems operating at 480 Y/277 V (or 600 Y/347 V) have the following benefits over 208 Y/120 V systems:

a) The source impedance of 480 Y/277 V systems is typically less than 208 Y/120 V systems. This characteristic provides a more stable source with better voltage regulation, and minimizes voltage distortion due to the nonlinear load currents.

b) 480 Y/277 V systems are less susceptible to on-premises generated disturbances. Step-down transformers (and other power enhancement devices) for 208 Y/120 V utilization equipment help attenuate disturbances originating on the 480 V system.

c) 480 Y/277 V systems distribute power at lower currents, which result in lower heat losses in feeders. 480 Y/277 V systems may also decrease material and labor costs associated with installing long feeder circuits.

Step-down transformers (and other power enhancement devices) may be located physically close to the electronic load equipment to minimize the buildup of common-mode voltage. Delta-connected transformer primaries trap balanced triplen harmonic currents generated on the secondary side by nonlinear electronic load equipment. This action serves to reduce distortion of the voltage waveform at the 480 Y/277 V level.

Copyright © 2006 IEEE. All rights reserved.

It is not recommended practice to step up the voltage from the service entrance by means of a locally installed transformer in order to obtain a higher power system voltage for the electrical distribution system serving electronic load equipment. Although this can be done in certain cases, it is also possible that less satisfactory results can occur than if the system voltage at the service entrance was used.

Due to the generally lower impedance of 480 Y/277 V distribution systems, higher short-circuit currents may be available throughout the system. Overcurrent protective devices with higher interrupting capabilities and equipment with higher withstand ratings may be required.

In some situations, electrical distribution at 208 Y/120 V is unavoidable. This may be due to limitations of the utility or facility to provide higher voltages. As previously noted, nonlinear electronic load equipment may cause undesirable voltage distortion that can adversely affect the entire premises. In these situations, a system analysis may be performed to determine proper mitigation techniques such as the installation of isolation transformers and other power conditioning or filtering equipment located close to the electronic load equipment.

8.3.2 System arrangement

Arrangement plays an important role in the reliability, flexibility, and maintainability of the electrical system serving electronic load equipment. The type of system arrangement selected is typically affected by the competing objectives of balancing the issues of costs vs. reliability and flexibility. Typically, as the need for reliability increases, the associated cost of the electrical system also increases. Modern electronic equipment requires continuous, reliable power from the power system source all the way to the branch circuit outlet. The selected arrangement of the serving power system, the service entrance, the building electrical distribution system, and the branch circuits should serve to minimize adverse interactions between various loads in the facility.

8.3.2.1 Arrangement of power system and service entrance

There are many methods for providing electrical service to different facilities. Utilities can supply facilities with different incoming line voltages and different system configurations depending on the needs of the facility. In some situations, the facility owners will design, install, and maintain their own medium-voltage electrical system.

8.3.2.1.1 Types of power systems

The following types of power systems can serve the facility in the order of least to most reliable (and least to most costly):

a) Simple radial system
b) Expanded radial system
c) Primary selective system
d) Primary loop system
e) Secondary selective system
f) Secondary spot network
g) Ring bus

Reliability of the power system should be judged on the ability of the system to provide continuous power to the facility, to provide stable regulated voltage, and to be flexible enough for future expansion needs and for routine maintenance needs that require de-energizing portions of the system. The subject of various power system configurations and associated reliability and cost considerations are discussed in detail in IEEE Std 141™ and IEEE Std 241™.

 Copyright © 2006 IEEE. All rights reserved.

8.3.2.1.2 Considerations for locating the power service entrance

The location of the incoming service entrance should be carefully considered. Consideration should be given to the location of accessible grounding electrodes in order to provide grounding of the power system as close as practicable to the service entrance equipment. Important consideration should also be given to the location of other services such as telecommunications. Power systems, telecommunications metallic systems, cable television metallic systems, and other metallic systems (such as a lightning protection system) must be effectively grounded and inter-system bonded to each other. Even when grounding electrodes are effectively bonded together into one conductive ground structure, potential differences may occur between different systems. For example, the installation of the power service entrance at one end of the building and the installation of the telecommunications entrance facility at the other end of a building may still cause unacceptable voltages to appear between the power and telephone systems during transient events (such as lightning and power circuit faults). Recommended practice is to install the power service entrance, the telecommunications cable entrance, and other facilities for incoming metallic systems as physically close as practicable to each other and to a grounding electrode system. This type of configuration serves to reduce potential differences between systems under both steady-state and transient conditions. It also provides an effective grounding means for SPDs connected to the different systems. It should be recognized that multiple service entrances may be used for purposes of diversity, reliability, and redundancy. The electrodes for these systems shall be bonded together in accordance with the NEC. Further information on telecommunications and distributed computing is given in Chapter 9.

8.3.2.2 Arrangement of in-building electrical distribution system

Arrangement of the building electrical distribution system depends on factors such as the selection of system voltage and the power system configuration. It also depends on the types, the ratings, and characteristics of the electronic load equipment. Electronic load equipment that is susceptible to voltage variations or requires uninterruptible power sources (UPSs) may require one of the power enhancement devices discussed in Chapter 7. Other equipment may have characteristics that can adversely affect other loads on the same circuit or feeder. These loads may be linear loads, such as motors with their associated inrush currents, or nonlinear loads, such as static power converters and their associated distorted harmonic voltages and currents. Recommended practice is that equipment that is required to support electronic load equipment and the associated operation of a facility (such as heating, ventilation, air conditioning, and process cooling equipment), should be powered via separate feeders and/or panelboard-branch circuits (see Figure 8-1). It is vital that the building electrical distribution system be properly interfaced with the branch circuits. Branch circuits should be arranged to ensure all desired performance levels over and above those already provided by meeting safety requirements.

8.3.2.2.1 Three-phase vs. single-phase systems

Some power conditioning and electronic load equipment is operable only from a three-phase power source. Often single-phase equipment can be operated directly from a single-phase component of a three-phase system. However, these alternatives should be carefully determined before selecting an electrical system design. The acceptable voltage limits of all equipment must be determined and carefully evaluated to ensure proper operation on the electrical system into which it is installed. Some equipment may have features such as internal taps or other adjustments that will allow it to accept common utilization voltages.

When evaluating the choice between three-phase and single-phase systems, consideration should always be given to the fact that three-phase systems may generally support larger loads with greater efficiency. In addition, the source impedance of three-phase systems is generally lower than single-phase systems, which is important to minimize voltage waveform distortion due to nonlinear load currents. Three-phase power may also be derived from single-phase systems. However, the derivation of three-phase power from a single-phase system is not always practical and is not recommended. Certain methods of converting a single- phase circuit to supply three-phase loads such as capacitor phase shifters are considered inappropriate for electronic load equipment and may damage these loads per IEEE Std 141. Still other

Copyright © 2006 IEEE. All rights reserved.

methods, such as utilizing single-phase motors to drive three-phase generators, may be used to convert single-phase to three-phase. Even so, special precautions should be observed, such as balancing the load among the three phases.

Most three-phase electronic load equipment cannot tolerate the application of single-phase power to its input. The resulting downtime and equipment damage can be extensive. Because fuses and circuit breakers generally cannot prevent all types of single-phasing conditions, recommended practice is that electronic phase failure or voltage-unbalance relays be installed where necessary to mitigate single-phasing events.

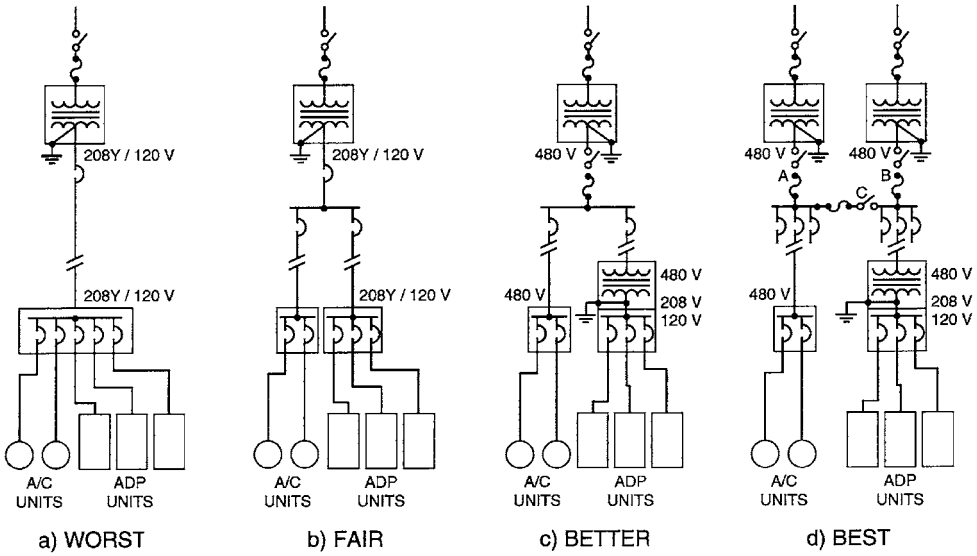

Adapted from FIPS Pub 94.

Figure 8-1—Recommended separation of electronic load equipment power distribution from support equipment power distribution

8.3.2.2.2 Feeder circuits

Feeder circuits connecting switchboards to panelboards and other interconnected equipment may be in the form of a busway or cable. The ampacity and length of these circuits may be quite large. Associated fault currents may be of great magnitude depending on the voltage of the feeder circuit, impedance at the fault location, and the impedance of the feeder source. Faults occurring on feeder circuit conductors generally involve the equipment grounding conductor (EGC). Therefore, particular attention should be directed to minimizing voltage drops associated with both the load currents and the anticipated fault currents. Recommended practice is to provide dedicated feeder cable circuits consisting of phase conductors, neutral conductor (where applicable), and insulated EGC(s) in effectively grounded and bonded metallic conduit, raceway, or cable assemblies when they serve electronic load equipment. A properly grounded and bonded system is necessary to facilitate the operation of overcurrent protective devices when a ground fault occurs. A fully enclosed, dedicated busway (without taps) is also a recommended practice when the ampacity of the circuit justifies the cost. Dedicated feeder circuits avoid problems that often result from multiple loads being connected at different locations to the same feeder. Multiple loads may adversely interact with each other via the commonly shared feeder circuit wiring impedances. Where shared feeder cable circuits or busway (with taps) are used to serve electronic load equipment, a separately derived source (such as an isolation transformer or other power conditioner) may need to be installed for each tap serving electronic load equipment.

 Copyright © 2006 IEEE. All rights reserved.

8.3.2.2.3 Branch circuit interface to electronic load equipment

Recommended practice is to interface certain configurations of electronic load equipment to the building electrical distribution system via a dry-type shielded isolation transformer (or other power enhancement device). This is especially important where two or more separate power systems serving electronic load equipment are not referenced to the same ground reference as the electronic load equipment. The isolation transformers provide system voltage matching and also create a separately derived source. Recommended practice is to install the isolation transformers as close to the branch circuit panelboard and associated electronic load equipment as practicable. In addition, these transformers shall be properly selected and installed. Details on selecting isolation transformers manufactured specifically to supply nonlinear electronic load equipment (K-factor rated) are given in 8.4.1. Details on proper grounding of the transformers are given in 8.5.2. Isolation transformers also come equipped as part of power distribution units (PDUs) that also contain internally mounted branch circuit panelboards. Accordingly, the PDU is also a recommended practice for interfacing the electrical distribution system with electronic load equipment. Details on selecting PDUs are given in 8.4.10.

8.3.2.3 Arrangement of branch circuits

Panelboards serve the branch circuits that supply the utilization equipment. Panelboards that serve electronic load equipment should be placed in the same area as the electronic load equipment and bonded to the same ground reference used for the electronic load equipment. This location philosophy is recommended for any panelboard that serves other loads in the same area with the electronic load equipment, such as lighting heating, ventilation, air conditioning, and process cooling equipment. Panelboards shall be properly selected and installed. Details on selecting panelboards manufactured specifically to supply nonlinear electronic load equipment and recommended installation practices are given in 8.4.2. Branch circuit receptacles are typically the point of attachment of the premise's wiring system to the electronic load equipment. In addition to design requirements, the branch circuit shall be installed in a workmanlike manner with materials and devices listed for the purpose by an NRTL as explained in the NEC.

When supporting simple loads, common practice is to share both feeder and branch circuit wiring with loads of unlimited variety. This practice may be found extended to the placement of various separate circuits into a commonly shared conduit or other form of raceway. These approaches are typically based on economics, and normally, there is little fear of load incompatibility on shared circuits serving simple loads. However, electronic load equipment may be susceptible to interaction problems with other load equipment and steps shall be taken to minimize such interactions. The simple arrangement of multiple electronic load equipment sharing phase, neutral, or EGC wiring paths (including conduits and raceways) may produce unwanted interactions.

8.3.2.3.1 Dedicated circuits

Recommended practice for branch circuits supporting electronic load equipment is to install dedicated circuits for electronic load equipment. A dedicated circuit is one that has a separate neutral conductor for the circuit, has one or more devices connected to it, and has an EGC that may or may not be common to other circuits. Splicing of conductors should be avoided or minimized to the greatest extent practicable. The dedicated circuit should include an insulated EGC and should be run in effectively grounded metallic raceway or metallic cable assembly dedicated to that circuit to minimize unwanted interaction problems with other circuits. When raceways are used to transport a large number of circuits, the individual phase, neutral, and EGCs for each circuit should be bundled together. The neutral-to-ground voltage measured at the load should be minimized by installing separately derived sources (i.e., transformers, PDUs) as close to the load as possible. For economic reasons, similar classes of loads may share circuits if they are known to be compatible. Office workstation areas should be designed to accommodate one separate, dedicated branch circuit wiring and receptacle for electronic load equipment and another separate wiring and receptacle circuit for convenience loads or high impact loads such as electric pencil sharpeners, portable electric

Copyright © 2006 IEEE. All rights reserved.

heaters and fans, water coolers, laser printers, and copy machines. This recommendation on the panelboard branch circuit system is similar to the feeder circuit requirements shown in Figure 8-1.

8.3.2.3.2 Shared circuits

Shared circuits are those circuits that share phase and/or neutral conductors. A type of unwanted interaction associated with shared phase conductors is the operation of an overcurrent protective device due to a fault or overload condition on one individual piece of equipment, which then shuts down other connected loads. A type of unwanted interaction associated with a neutral conductor shared by three different single-phase circuits may be excessively high neutral-to-ground voltages and neutral currents. Other types of unwanted interaction may be complex and difficult to diagnose. Some loads may interact due to their physical location on the circuit. Other loads may be susceptible to transient voltages and currents that intermittently occur at tapping points on multi-outlet branch circuits or prefabricated assemblies in response to *L di/dt* effects. Such events are often initiated by normal load-switching operations on the power system and by the effects of lightning currents on the building electrical distribution system.

8.3.3 Engineering studies

8.3.3.1 Analyses of harmonic currents and voltages

Refer to IEEE Std 519™ for a general discussion of harmonic currents. Recommended practice is for all power distribution systems intended for use with electronic load equipment to comply with IEEE 519 and IEEE 399™ guidelines. Calculation or estimation of load harmonic profiles is a necessary requirement when installing power factor correction equipment, selecting K-factor rated transformers (refer to 8.4.1.8), or derating existing conventional transformers.

Improvements in power factor may be desired for financial reasons (to lower utility costs associated with power factor penalties) or operational reasons (to lower system losses, increase system reserve capacity, or improve voltage conditions). Extreme caution should be used when applying capacitors. The manner in which they are applied can cause resonance conditions that can magnify harmonic levels and cause excessive voltage distortion. Power factor correction equipment may be applied directly at or close to the facility service entrance, or as close as practicable to the load equipment. The location of the power factor equipment will depend on economic reasons as well as operational and design considerations. Thorough analysis of distribution system characteristics and load characteristics should be made prior to applying power factor correction capacitors to determine what effect harmonic currents will have on the system, and to determine proper harmonic mitigation techniques. Refer to IEEE Std 141 for further discussion on application of power factor correction capacitors.

It is recommended practice to measure and record the harmonic profile of load currents at the transformers serving the load. When the harmonic profiles of individual loads at downstream locations are measured, there is a tendency to calculate a higher than necessary K-factor. This is also the case in new installations where the current harmonic profile is estimated from typical individual pieces of electronic load equipment based upon experience or data supplied by the OEM. Due to cancellation, the combined contribution to K-factor of several loads is always less than the sum of individual loads. This reduction may be substantial when there is a large number and a diversity of nonlinear load types. Figure 8-2 shows an example of how harmonic levels vary in a typical electrical distribution system. Note that the level of harmonic current distortion decreases from the individual electronic load equipment to the branch circuit panelboards, through delta-wye step-down transformers, and upstream to the power source. However, when loads are removed from the electrical distribution system, the cancellation benefit produced by these loads is also removed. In many cases, this will not be a problem for a transformer that is conservatively loaded or is K-factor rated. It may be a problem if the load or K-factor rating is marginal.

Cancellation results when harmonics produced by different loads are phase-shifted relative to each other. Impedance in branch circuit wiring, as well as isolation transformers or series inductors and shunt capacitors

 Copyright © 2006 IEEE. All rights reserved.

that may be incorporated in the loads, shift harmonic currents. A delta-wye transformer serving single-phase nonlinear loads randomly distributed among the three phases will trap the balanced triplen load harmonics in the primary winding. This may substantially reduce the triplen harmonic currents and the related current and voltage distortion that would otherwise appear on the primary side.

It is difficult to predict a harmonic diversity factor without modeling the nonlinear loads and the electrical distribution system. Computer programs and methods that allow modeling and simulation are becoming available. With more experience, these computer analysis tools are expected to provide diversity factors for typical loads in industrial and commercial power systems. For new installations, where such diversity factors are not available, recommended practice is to monitor the load current distortion and diversity relative to the load mix in a comparable facility.

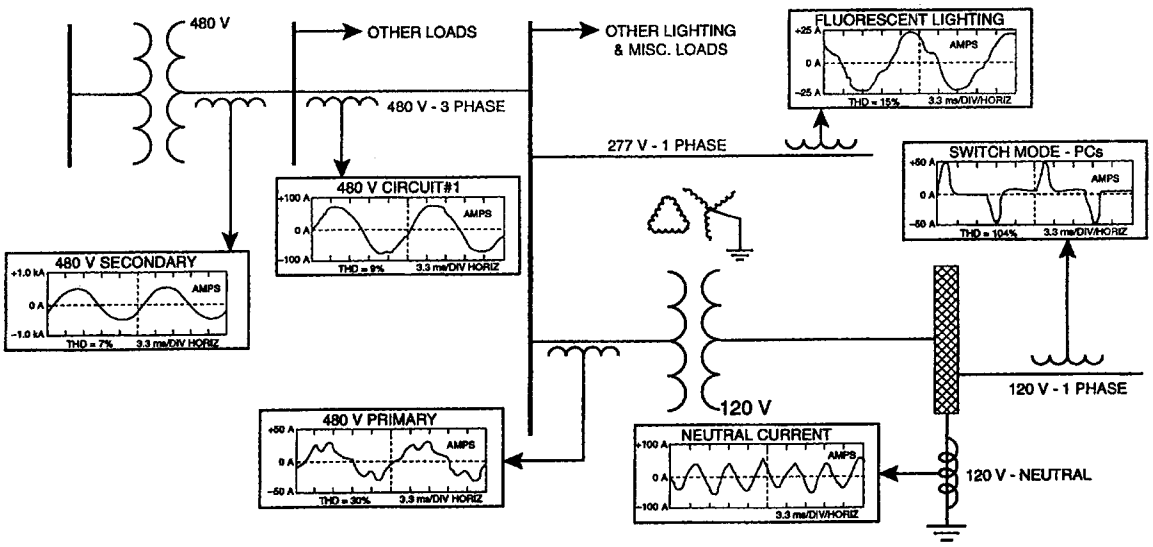

Figure 8-2—Example distribution of harmonic levels in a facility ac distribution system

8.3.3.2 Analyses of steady-state and transient voltage conditions

Maintaining proper operating voltage is essential when serving electronic load equipment and associated equipment. Inadequate voltage may affect the performance of electronic load equipment or risk equipment damage. Improper voltage at the input to UPS systems or static bypass circuits can cause operational problems or synchronization problems.

8.3.4 Alternate/standby power requirements

Most facilities that support electronic load equipment have emergency power systems, preferred and alternate feeder circuits, UPSs with bypass circuits, or a combination of these items. The purpose of these different system configurations is to provide the most reliable and redundant power system available. However, these systems require careful attention to minimize adverse interactions between emergency generator systems and downstream electronic load equipment, and to ensure the proper interconnection of grounded circuit conductors between systems. Detailed information on system grounding requirements of UPS systems is discussed in 8.5.2.1.

8.3.4.1 Standby generator systems

Incompatibility issues regarding emergency standby generator systems and downstream electronic load equipment are gaining more recognition in modern power systems. UPS systems and electronic load

Copyright © 2006 IEEE. All rights reserved.

equipment can be very susceptible to voltage waveform distortion and frequency variations. The distortion of the voltage waveform is primarily a function of the magnitude and harmonic content of the load current and the impedance of the upstream electrical distribution system. Standby generator systems generally have a much higher impedance than the utility system. Therefore, the voltage waveform distortion typically increases when loads are fed by standby generator power. One of the most common incompatibility situations is with generator systems and downstream UPS systems. These situations can range from problems with the UPS inverter trying to synchronize to the static bypass circuit to the UPS input failing to accept the input voltage and thus causing the UPS system to go to battery power. In this latter condition, the voltage distortion typically improves when the load is fed from battery power (the load is now on battery and not acting on the impedance of the generator system) and the UPS input accepts the line voltage. Once again, voltage distortion can increase when the loads are powered via the UPS system and the UPS cycles back and forth on battery power. Additionally, generators may self-excite and shut down due to the leading input power factor of lightly loaded UPSs with input harmonic filters. Recommended practice is to provide the standby generator manufacturer with information on the type, rating, and characteristics of the electronic load equipment. Many generator manufacturers and UPS manufacturers have guidelines for sizing emergency generators when supplying UPS systems. This rating will typically depend on the type and size of the UPS system. In general, the standby generators should have the following characteristics to minimize adverse interactions when supplying nonlinear loads:

a) Isochronous electronic governor to regulate frequency. These governors typically maintain frequency regulation within 0.25% of the setting, as opposed to approximately 3% for mechanical governors.

b) Permanent magnet excitation system or filtering means to isolate the voltage regulator power circuit from the distorted waveform.

c) Generators with a two-thirds pitch stator winding design to minimize third harmonic waveform distortion.

d) Low subtransient reactance to minimize voltage waveform distortion.

8.3.4.2 Transfer switch arrangements

Recommended practice is for all emergency and standby systems intended for use with electronic load equipment to be designed per IEEE Std 446™. This document details recommended means of achieving interconnection of prime and back-up ac supply sources via transfer switches. In particular, this recommended practice clarifies the very important issues surrounding the grounding and interconnection of the grounded circuit conductor of two ac systems that are to be switched between systems such as a UPS system, engine-driven generator, or both.

The preferred configuration for three-phase systems serving electronic load equipment is the use of three-phase, 3-wire circuits (with EGCs) serving three-pole transfer switches, which in turn feeds isolation transformers (or other power conditioners that meet the requirements of a separately derived system) located as close as practicable to the electronic load equipment (see Figure 8-3). When serving 4-wire loads directly, the preferred arrangement is the use of four-pole transfer switches with an overlapping neutral pole to maintain the generator as a separately derived source and simplify any ground-fault protection schemes.

8.4 Equipment selection and installation considerations

The reliability of the electrical distribution system serving electronic load equipment depends upon proper equipment selection and installation. The guidelines in 8.4.1 through 8.4.12 are recommended for selecting and installing such equipment.

 Copyright © 2006 IEEE. All rights reserved.

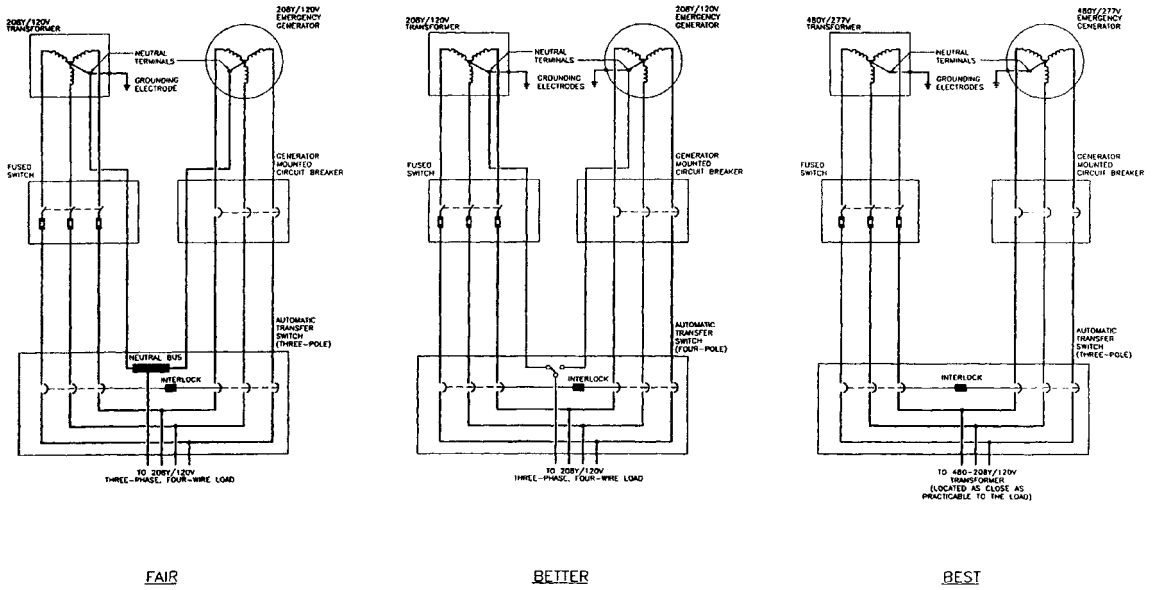

Figure 8-3—Recommended transfer switch arrangement serving electronic load equipment

8.4.1 Dry-type transformer

Recommended practice is to use electrostatically shielded isolation-type transformers as the basic means of interface between the building electrical distribution system and electronic load equipment. Electronic load equipment known to be nonsusceptible either by designed-in immunity or independence of the serving power circuit may not require this transformer interface to the building electrical distribution system. Autotransformers do not provide isolation and should not be used. Three-phase transformers supporting nonlinear loads should be selected such that their windings share a common core (E-core). Banked single-phase transformers are not recommended to support nonlinear loads since they may saturate their cores and overheat due to dc and triplen harmonic currents on the neutral.

8.4.1.1 Location

Recommended practice is to install transformers as close to the branch circuit panelboard and associated loads as practicable. For example, they should be installed and bonded to the same ground reference as the electronic load equipment. Figure 8-4 illustrates the recommended philosophy for locating isolation transformers that serve electronic load equipment.

8.4.1.2 Wiring methods

Proper routing of the primary and secondary conductors to the transformer and within the transformer is necessary to receive all the benefits of the isolation transformer, especially higher frequency noise reduction. Recommended practice is to route primary wiring in a separate conduit or raceway from the secondary wiring. It is also recommended practice to separate the input and output wiring inside the enclosure as much as practical. Additionally, the associated phase, neutral, and EGCs should be installed bundled together. This technique reduces the unwanted stray coupling between the primary and secondary conductors, and induced currents in EGCs due to stray magnetic flux generated by the transformer.

Copyright © 2006 IEEE. All rights reserved.

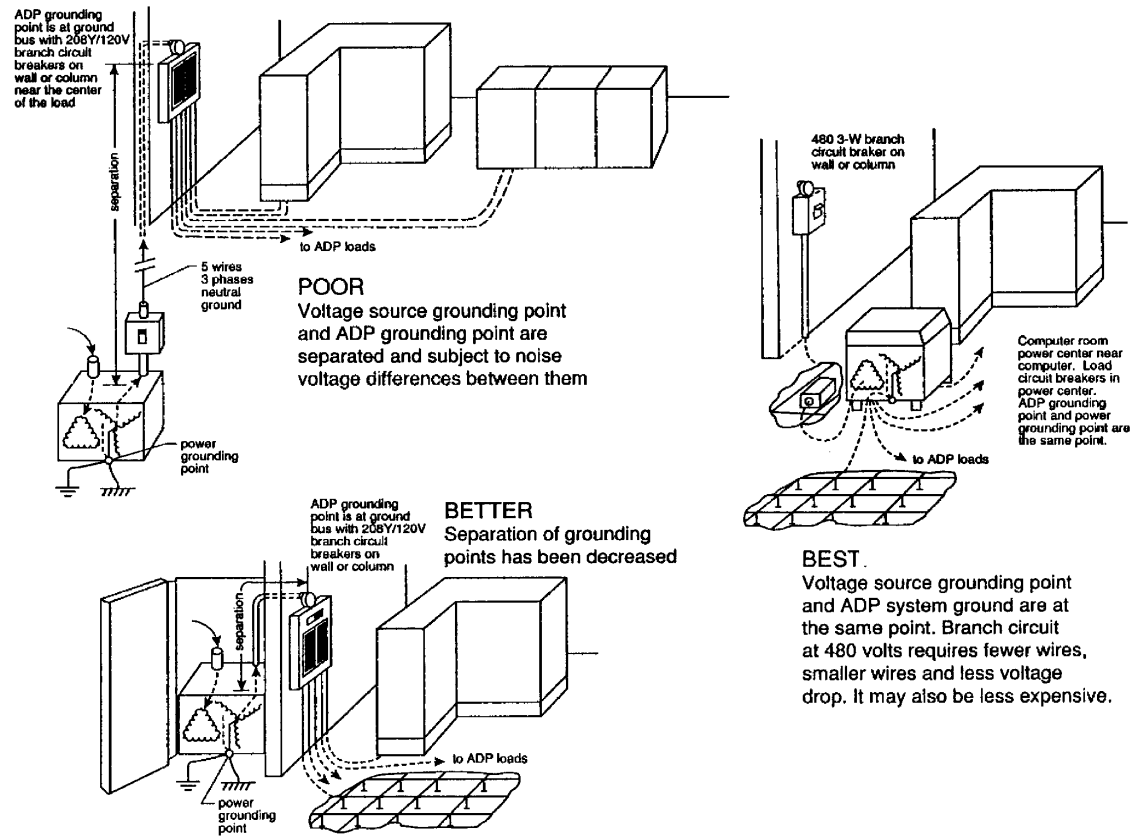

Adapted from FIPS Pub 94.

Figure 8-4—Best design locates shielded isolation transformer as close to electronic load equipment as possible

8.4.1.3 Grounding methods

Equipment and system grounding shall comply with the NEC. Insulated EGCs are recommended to be installed in both primary and secondary circuits. Proper grounding is required to achieve the benefits of an isolation transformer. The secondary neutral terminal and bonding jumper, the grounding electrode conductor, the electrostatic shield and frame, and all EGCs should terminate to a common equipment grounding terminal on the transformer enclosure (refer to 8.5.2 for more details on system grounding). The typical dry-type transformer enclosures are designed and listed for the connection of conduits and raceways only at designated points. These points are generally below a given location in the enclosure where the ambient temperature has been tested and shown not to rise above the listed temperature range.

8.4.1.4 Impedance considerations

Recommended practice is for low-voltage dry-type isolation transformers to have an impedance (%Z) in the range of 3% to 5%, as calculated at the nominal line frequency. This impedance should not exceed 6% in any case. Installation of transformers with lower impedance helps minimize voltage waveform distortion due to nonlinear electronic load equipment. A stiff source (low-impedance value) is advantageous in cases where loads are being served with high peak-current demand and large crest factors, both of which are typical of single-phase 120 V electronic load equipment. A lower value impedance will minimize flat-topping of the ac voltage waveform, reduce the problem of harmonic voltage distortion, and improve voltage regulation of the transformer. Specifying a lower impedance will also result in larger available fault currents.

 Copyright © 2006 IEEE. All rights reserved.

Special precautions must be taken to ensure that secondary overcurrent protective devices have adequate interrupting ratings. In addition, larger rms and peak currents of single-phase 120 V electronic load equipment should be expected.

8.4.1.5 Electrostatic shield considerations

Recommended practice is to use transformers equipped with at least a single-layer electrostatic shield for the primary-secondary interwinding. The shield should be directly grounded or bonded to the transformer metal frame/enclosure using low-inductance means to ensure diversion of interwinding common-mode currents. A second insulated electrostatic shield is also useful. The second shield increases the common-mode attenuation and reduces the conversion of incoming common-mode voltages into normal-mode voltages on the output. Certain manufacturers provide transformers with the electrostatic shield bonded to the enclosure. Other manufacturers provide a terminal for the electrostatic shield that must be bonded to the enclosure at the time of installation.

8.4.1.6 Temperature sensor considerations

Some transformers may contain temperature sensors embedded in the windings. These sensors may be used to indicate excessive operating temperatures that may be caused by overload, nonlinear load currents, blocked ventilation, or high ambient temperatures. This feature can either sound an alarm or activate an overcurrent protective device or disconnect switch to de-energize the transformer before excessive damage is sustained. For increased transformer protection, recommended practice is to include temperature sensors in each of the three-phase windings.

8.4.1.7 K-factor rated transformers

UL and transformer manufacturers have established a K-factor rating for dry-type power transformers to indicate their suitability for supplying nonsinusoidal load currents. The K-factor relates a transformer's capability to serve varying degrees of nonlinear load without exceeding the rated temperature-rise limits. The K-factor is the ratio of stray losses in the transformer winding for a given nonsinusoidal load current to the stray losses in the transformer winding produced by a sinusoidal load current of the same magnitude. These transformers are typically specially designed to handle the increased heating effects and neutral currents produced by nonlinear electronic load equipment. The following are some of the design features:

a) The neutral bus is rated at 200% of the secondary full-load ampere rating to accommodate the large neutral currents that principally result from triplen harmonics and phase imbalance. The transformer neutral bus rated at 200% is capable of accommodating oversized or multiple neutral conductors.

b) The winding conductors are specially configured and sized to minimize heating due to harmonic load currents. Special configurations and sizing such as multiple, parallel conductors can reduce the skin effect of the higher frequency harmonics and accommodate the balanced triplen harmonics that circulate in the transformer primary (delta) windings.

c) Cores are specially designed to maintain flux core density below saturation due to distorted voltage waveforms or high line voltage.

Standard K-factor ratings are 4, 9, 13, 20, 30, 40, and 50. The K-factor for a linear load is 1. For any given nonlinear load, if the harmonic current components are known, the K-factor can be calculated and compared to the transformer's nameplate K-factor (refer to Chapter 4 for sample calculation of load K-factor). As long as the load K-factor is equal to or less than the rated K-factor of the transformer, the transformer is suitably rated and is considered safe to operate at rated load without overheating. Typical load K-factors for facilities containing large numbers of computers appear to range between 4 and 13. Measured K-factor on the secondary of step-down transformers that serve almost exclusively nonlinear loads, such as personal computers, have been observed to range as high as 20, but this is extremely rare. In most cases, a transformer with a K-factor rating of 13 can be sufficient to handle typical nonlinear electronic load equipment.

Copyright © 2006 IEEE. All rights reserved.

8.4.1.8 Derating conventional transformers

In the absence of recognized K-factor rated transformers, recommended practice is to derate conventional transformers in accordance with IEEE Std C57.110™. This recommended practice presents two methods for derating a transformer on the basis of certain of its design characteristics and on the harmonic content of its load current. The first method is intended primarily for transformer design engineers, and the second more commonly used method is based on information obtained from transformer certified test reports. Based on the transformer nameplate data (kVA rating, voltage rating, and primary and secondary full-load ampere ratings), the certified test results data (primary and secondary winding resistances and load losses), and the harmonic profile of the load current, a derating calculation can be performed. This method requires a calculation of harmonic loss factor (also defined by UL as K-factor) from the harmonic profile of the load current. For transformers serving single-phase nonlinear electronic load equipment randomly distributed among the three phases with resultant large neutral currents, the neutral current should not exceed the ampacity limitations of the neutral terminal in the transformer or other neutral components in the power distribution system. Although a conventional transformer may be properly derated to avoid excessive winding heating associated with the harmonic currents, the neutral bus rating may be the limiting factor that determines the maximum load that the transformer can handle.

Another derating method sometimes suggested in the computer industry compares only the crest factor of the load current to the crest factor of a sinusoidal waveform. The transformer derating would then be equal to the sinusoidal crest factor divided by the actual or predicted crest factor of the load current. In the case of electronic load equipment with a high third harmonic content and corresponding large crest factor (such as switched-mode power supplies), this method may provide reasonable results. However, this method should only be used for certain load types and may underestimate losses in the presence of harmonics of higher order. It does not take into consideration differences in the losses associated with the winding eddy- current losses in the transformer. This is an important issue because two waveforms of identical crest factor can have widely different effects on the winding eddy-current losses.

Figure 8-5 shows an example of a derating curve (appearing in Zavadil et al. [B9][2]) obtained by more accurate computations based on IEEE Std C57.110. This figure shows that the derating can reach 50% when the transformer supplies more than 70% of its load to single-phase power supplies of electronic load equipment. This example shows the importance of performing the calculations in accordance with IEEE Std C57.110.

8.4.1.9 Conventional vs. K-factor rated transformers

Conventional transformers are designed to operate within a certain temperature range provided certain environmental and operating conditions are met. Additional losses are incurred when these transformers supply nonsinusoidal load currents with a total harmonic current distortion exceeding their design limit of 0.05 pu as described in IEEE Std C57.12.01™. The additional losses are primarily eddy-current losses in the windings, which are proportional to the frequency squared. These losses result in an increased temperature in the transformer, which causes a reduction in life expectancy. In new installations, recommended practice is to specify K-factor rated transformers listed by an NRTL that supply harmonic-rich loads. In existing installations supplying harmonic-rich loads, recommended practice is to either derate the conventional transformers (refer to 8.4.1.8) or replace these transformers with K-factor rated transformers (refer to 8.4.1.7) where economically feasible.

[2]The numbers in brackets correspond to those of the bibliography in 8.9.

 Copyright © 2006 IEEE. All rights reserved.

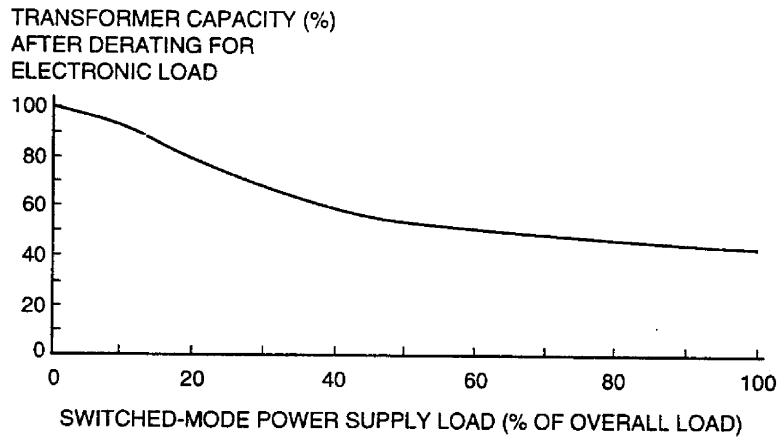

Adapted with permission from Zavadil [B9].

Figure 8-5—Transformer capability for supplying high harmonic electronic load equipment

A K-factor rated transformer is preferred over an oversized (derated) conventional transformer for several reasons. An oversized transformer may have higher short-circuit currents available, thus necessitating secondary protective devices with higher interrupting ratings. In addition, oversized transformers have higher inrush currents associated with them, which may necessitate a corresponding increase in the size of the primary protective device serving the transformer to prevent nuisance tripping upon energizing the transformer. Increasing the primary protective devices may also necessitate an increase in the size of the primary conductors for protection purposes. These additional costs will probably outweigh any additional costs resulting from selecting a K-factor rated transformer over a conventional transformer (if any). In addition, K-factor rated transformers are equipped with 200% rated neutral buses to accommodate the large neutral current resulting from certain types of single-phase nonlinear electronic load equipment. Also, it is not known how local jurisdictions will interpret the NEC regarding derating of conventional transformers as opposed to installing those properly listed to supply nonsinusoidal load currents. Furthermore, there is a concern about maintaining the required derating of conventional transformers over the lifetime of the site.

8.4.2 Switchboards and panelboards

Switchboards and panelboards that support electronic load equipment and related loads should be properly designed and installed. Recommended practice is to use panelboards specifically listed for nonlinear loads if they serve electronic load equipment. As a minimum, panelboards should be rated for power or lighting applications and should not be a lighter duty type. Special attention should be given to the location and installation methods used when installing panelboards. In addition, protective devices shall adequately protect system components, neutral buses should be sized to accommodate increased neutral currents due to harmonic currents from nonlinear electronic load equipment, and equipment ground buses should be sized to accommodate increased numbers of EGCs due to the recommended practices of using insulated EGCs and dedicated circuits for electronic load equipment. SPDs may also be installed external to, or internal to, the switchboards or panelboards.

8.4.2.1 Location

Panelboards that serve electronic load equipment should be placed as near to the electronic load equipment as practicable and should be bonded to the same ground reference as the electronic load equipment. Other panelboards located in the same area as the electronic load equipment that serve other loads such as lighting, heating, ventilation, air conditioning, and process cooling equipment should also be bonded to the same

Copyright © 2006 IEEE. All rights reserved.

ground reference as the electronic load equipment. Panelboards should be directly mounted to any building steel member in the immediate area of the installation. Isolation of a panelboard from the metallic building structure by an electrically insulating material, as an attempt to prevent flow of high-frequency current through the panelboard, is not recommended practice. The panelboard and metallic building structure, separated by a dielectric material, become capacitively coupled. The capacitive coupling presents a low impedance at high frequency defeating the original purpose. NFPA 780 requires effective grounding and bonding between objects such as structural building steel and a panelboard located within sideflash distance [approximately 1.8 m (6 ft), horizontally] of each other. Insulation materials, commonly used in an attempt to separate a panelboard from building steel, are rarely capable of withstanding lightning-induced arcing conditions.

8.4.2.2 Overcurrent protective device considerations

The overcurrent protective devices located in switchboards and panelboards should respond properly to nonlinear load currents. Some overcurrent protective devices only interpret the proper rms value of the load current if it is purely sinusoidal. Others will respond to the true rms value regardless of load current waveform. Recommended practice is to use true rms overcurrent protective devices. Refer to 8.4.3 and 8.4.4 for further guidance on selecting circuit breakers and fuses, respectively.

Fuses and circuit breakers generally do not prevent all types of single-phasing conditions. Therefore, electronic phase failure or voltage-unbalance relays may be required in addition to fuses or circuit breakers. Most three-phase electronic load equipment cannot tolerate the application of single-phase power to its input. The resulting downtime and equipment damage can be extensive. If external relaying is required, circuit breakers and fused switches must be selected with shunt-trip devices. All overcurrent protective device conductors should be properly shaped, routed, and installed in a workmanlike manner, especially at the point of termination to the protective device. With proper spacing, future measurements of load currents are more easily accessed using typical current probes or current transformers (CTs).

8.4.2.3 Neutral bus considerations

Neutral buses should be capable of handling increased neutral currents that may result from downstream nonlinear electronic load equipment. Neutral buses in switchboards are sometimes rated less than the phase buses due to normally anticipated diversity factors. Ratings in the 80% range are not uncommon, although ratings as low as 50% may be seen. This is typically not a problem when the switchboard serves line-to-line connected loads or nonlinear loads via a delta-wye connected isolation transformer. However, such derating can be a problem if the switchboard directly serves single-phase, line-to-neutral connected nonlinear electronic load equipment. Neutral buses in conventional panelboards are rated at 100% of the main bus rating.

It is recommended practice that oversized neutral buses be provided in switchboards that directly serve nonlinear electronic load equipment. Neutral buses may be specified by the switchboard OEM with an oversized ampacity rating without affecting the product safety listing. This approach allows a 200% rated neutral bus to be placed into any standard switchboard so as to allow for the expected larger neutral currents without specifying a switchboard with an oversized main bus rating. This approach is recommended practice where high magnitudes of neutral current is anticipated.

It is recommended practice that oversized neutral buses be provided in panelboards that directly serve nonlinear electronic load equipment. As a minimum, the neutral bus should be rated at 1.73 times the main bus phase current rating. Most equipment manufacturers provide specific panelboards that are listed by an NRTL and labeled for nonlinear loads. These panelboards contain a neutral bus rated at 200% of the panelboard main bus current rating. In addition, these neutral bus assemblies can accommodate oversized neutral conductors or double neutral conductors (refer to 8.4.5 for more details on conductor sizing). For example, a typical 225 A panelboard rated for nonlinear loads may have a neutral bus rating of 450 A, and the neutral bus may be capable of accommodating one 250 mm^2 (500 kcmil) oversized neutral conductor or

 Copyright © 2006 IEEE. All rights reserved.

two paralleled 125 mm^2 (250 kcmil) neutral conductors. The actual wire range for these lugs will vary between manufacturers and should be verified prior to ordering equipment and/or specifying conductor sizes. Since it is recommended practice to serve single-phase electronic load equipment with individual, dedicated circuits, individual termination points should be available on the neutral bus for each possible load. The neutral bus should be insulated from the panelboard enclosure unless the connections are appropriate (such as service entrance applications).

8.4.2.4 Equipment grounding bus considerations

The need for a bus to terminate all EGCs is well-established, as almost every circuit that supports electronic load equipment should require an EGC. Termination of these EGCs without a proper bus degrades the reliability of the grounding path, especially for higher frequency currents.

It is recommended practice that switchboards be equipped with an equipment ground bus. It is also important that all conductor connections to the bus be made using suitable hardware such as listed lugs, bolts, flat washers, locking washers, and nuts. Bolts with slotted heads should be avoided due to the difficulty in torquing these connections. In some cases, a second equipment ground bus for the termination of additional EGCs from insulated grounding receptacle circuits may be necessary.

Depending on the installation requirements, panelboards should be ordered as a listed product with the EGC bus properly bolted or bonded to the panelboard enclosure. An insulated EGC bus intentionally insulated from the panelboard enclosure may also be required (refer to 8.5.3.2 for more details on the insulated ground system configuration). It is not recommended to terminate EGCs to the panelboard via lugs bolted to the enclosure. Termination of EGCs to the panelboard by using panelboard support hardware is not recommended.

8.4.2.5 Surge protective device considerations

Recommended practice is that SPDs be applied to service entrance electrical switchboards and panelboards, and panelboards located on the secondary of separately derived systems that support ITE, telephone, telecommunications, signaling, television, or other form of electronic load equipment (refer to 8.6 for further details). These devices may be installed externally or internally to the switchboard or panelboard. Panelboards are available that contain integrally mounted SPDs that minimize the length of the SPD conductors, thus optimizing the effectiveness of the device. However, as pointed out in IEEE PC62.72™ (Draft 1, 1 November 2005) [B2], when an SPD is located inside switchboards or panelboards, there is a concern that failure of the SPD can cause collateral damage to the switchboard or panelboard, including compromising the insulation system with subsequent L-L and L-G faults.

It is recommended practice that all SPDs have a means to disconnect them for service. Locating the SPD external to the switchboard or panelboard allows the disconnecting means to be located inside the switchboard or panelboard and does not require access to the switchboard or panelboard interior when servicing the SPD.

8.4.3 Circuit breaker considerations

Recommended practice is to use circuit breakers that respond to the true rms value of load current when supplying nonlinear loads. Interrupting ratings of new and existing circuit breakers (particularly those fed from K-rated transformers with low impedances) should be evaluated for proper application. Proper application of circuit breakers requires that the time-current curves be coordinated and matched to the load characteristics.

Copyright © 2006 IEEE. All rights reserved.

8.4.3.1 Trip unit considerations

Circuit breakers used to serve electronic equipment can typically be specified with two different types of trip units, as follows:

a) Thermal-magnetic trip unit

b) Electronic trip unit (true-rms and peak sensing)

Selection of the proper trip device depends on load current waveform characteristics as well as other load, operational, and environmental issues.

8.4.3.1.1 Thermal-magnetic trip units

Circuit breakers equipped with thermal-magnetic trip units will properly respond to the true rms heating effects of nonlinear load currents. The bimetal thermal element responds directly to rms current regardless of the harmonic profile of the load current.

8.4.3.1.2 Electronic trip units

Circuit breakers equipped with true rms sensing electronic trip units will also properly respond to the true rms heating effects of nonlinear load currents, regardless of the harmonic profile. These trip units sample the current waveform at various times each cycle and compute the true rms equivalent current. The number of samples taken per cycle will vary from different manufacturers. Some of these trip units also contain a memory circuit that monitors items such as preloading conditions. These units may be preferable over thermal-magnetic units for the following reasons:

a) More accurate and greater flexibility in setting trip points and achieving selectivity

b) Ability to easily modify continuous current rating by replacement of rating plug

c) Not sensitive to ambient temperature

d) Available integral ground-fault protection

e) Available system monitoring functions

Circuit breakers equipped with peak-sensing electronic trip units will correctly interpret the rms value of the current only if the waveform is purely sinusoidal. Peak-sensing trip devices are not recommended to serve nonlinear electronic load equipment. Loads that produce distorted (nonsinusoidal) waveforms may either cause nuisance tripping of circuit breakers or prevent tripping of circuit breakers depending on the load waveform. Certain nonlinear loads such as switched-mode power supplies located in most electronic equipment have characteristics of very high crest factors. Crest factors of 2.5 or greater are typically measured on this type of equipment. Circuit breakers with electronic trip devices that respond to the peak value of the current waveform may falsely trip under these circumstances at currents below the continuous current rating of the circuit breaker.

8.4.3.2 Interrupting ratings

Interrupting ratings of new circuit breakers or existing circuit breakers (particularly those fed from new K-factor rated transformers or conventional transformers with low impedances) should be evaluated to determine if proper interrupting ratings are applied. Interrupting ratings need to be reevaluated if there are any changes to the power system, such as installing K-factor transformers. These transformers are typically specified or manufactured with a lower impedance (%Z) resulting in a higher available short-circuit current at the system components located on the secondary.

 Copyright © 2006 IEEE. All rights reserved.

8.4.4 Fuses

Fuses are true rms sensing overcurrent protective devices and respond properly to the true rms heating effects of nonlinear load currents. Proper application of fuses require that the time-current curves be coordinated and matched to the load characteristics and that manufacturer's fuse selectivity ratio tables be utilized. Where significant inrushes are expected, time-delay devices are recommended.

8.4.4.1 Safety switches

Fuses are typically installed in safety switches. Separately mounted fused safety switches are typically categorized as general-duty and heavy-duty types. The general-duty type safety switch is rated at 240 V maximum and is typically used in residential and light commercial and industrial applications. The heavy-duty type safety switch is rated at 600 V maximum and is typically used in commercial and industrial applications.

Safety switches can typically be ordered with neutral assemblies and equipment grounding assemblies. There is currently no listing for safety switches that are to be used specifically with nonlinear loads. It is recommended that the manufacturer be contacted to determine if oversized neutral assemblies can be installed in safety switches serving nonlinear electronic load equipment without voiding any listing requirements. In addition, the manufacturer should be contacted to determine if an insulated equipment grounding bus can be installed in the safety switch enclosure for those applications that require this grounding configuration.

Whenever fuses are utilized, there is a risk of a single-phasing condition if one fuse on a three-phase system blows. Safety switches are generally not stored energy devices and may not contain auxiliary functions such as undervoltage release or shunt-trip attachments that help protect against a single-phasing condition. This is an important consideration because some three-phase electronic load equipment may be susceptible to damage if a single-phase condition persists. Other devices may need to be installed to provide proper single-phasing protection.

8.4.4.2 Blown fuse indicators

Recommended practice is to use blown fuse indicators for the quick and safe determination of the source of power outage affecting downstream electronic load equipment. Some safety switches and fused circuit breakers contain indicating devices located on the front enclosure that indicate a blown fuse condition. Some fuses contain an indicator light, providing visual indication that a fuse is blown.

8.4.4.3 Interrupting ratings

Interrupting ratings of new fuses or existing fuses should be evaluated to determine if proper interrupting ratings are applied. Interrupting ratings need to be reevaluated if there are any changes to the power system, such as installing K-factor transformers. These transformers are typically specified or manufactured with a low impedance (%Z) resulting in a higher available short-circuit current on the secondary. This condition can be a problem especially where low interrupting capacity fuses, such as Class H fuses, are installed (Class H fuses have an interrupting rating of only 10 000 A).

8.4.5 Conductors

Typical electronic load equipment characteristics are categorized as continuous, nonlinear, and automatic voltage regulating. Therefore, phase and neutral conductors serving these loads should be properly sized to account for the increased heating due to harmonic currents, any phase imbalance and triplen harmonic currents flowing on the neutral conductor, and the higher associated phase currents due to inverse voltage-current load characteristics. Recommended practice is to install dedicated branch circuits for electronic load

Copyright © 2006 IEEE. All rights reserved.

equipment. The dedicated circuit should be run in grounded metallic conduit or raceway, using an insulated EGC. Splices should be avoided where practicable.

8.4.5.1 Phase conductors

In a three-phase, 4-wire system supplying single-phase nonlinear electronic load, the neutral conductor is typically considered a current-carrying conductor. In these situations, the NEC requires that the ampacity of the circuit conductors be properly adjusted to account for the combined mutual heating effects of the phase and neutral conductors. This additional heat is typically generated from two sources. The first source of additional heating is principally due to skin effect and proximity effect, which results in the effective ac resistance of conductors to increase as the frequency increases. In other words, as the frequency increases, the current at those higher frequencies tends to flow only on the outer surface of the conductor, which results in a higher apparent resistance, which in turn results in additional heating due to I^2R losses. This typically is not a major problem because as the harmonic frequency increases, the magnitude of the harmonic currents decreases. The second source of additional heating is principally due to triplen harmonic currents flowing in the neutral conductors of three-phase, 4-wire circuits serving single-phase nonlinear electronic load equipment. The resulting neutral current can be greater than the phase currents.

For example, consider a three-phase, 4-wire circuit containing four 2 AWG type TW copper conductors that serves a panelboard serving linear loads. The ampacity of the circuit conductors is 95 A (based on no more than three current-carrying conductors in the raceway) and the overcurrent protective device for this circuit may be rated at 100 A (which is the next highest standard overcurrent protective device rating). If this same panelboard serves single-phase nonlinear electronic load equipment, the three-phase, 4-wire circuit conductor ampacities must be adjusted to 80%, per the NEC, to account for the triplen harmonic currents flowing on the neutral conductor. Due to four current-carrying conductors in the raceway, the ampacity of the circuit conductors must be adjusted to 76 A (95 · 0.8), and the corresponding overcurrent protective device shall be rated at a maximum of 80 A. Failure to properly limit current will cause heating that may damage conductor insulation. This situation can compromise the proper operation of the overcurrent protective device. The design engineer should assure that all electrical equipment selected and associated terminals and lugs are able to accommodate the larger phase conductors. In addition, neutral conductors sized equally to the phase conductors may not be capable of handling the expected increased currents due to the nonlinear electronic load equipment. It is recommended practice to oversize the neutral conductors in these situations, as described in 8.4.5.2.

8.4.5.2 Neutral conductors

Neutral conductors in three-phase, 4-wire systems serving panelboards supplying single-phase nonlinear electronic load equipment should be properly sized to handle the increased currents associated with the triplen harmonics and phase imbalance. These increased currents cause additional heating due to the proximity heating effects and the increased losses of the neutral conductor. Recommended practice is to oversize the neutral conductor to a minimum of one trade size larger than the phase conductor ampacity or use two neutral conductors sized the same as the phase conductor. If two neutral conductors are run in parallel, the size of the individual neutral conductors must be at least 1/0 AWG for new installations or 2 AWG for existing installations per the NEC. The design engineer should assure that all electrical equipment selected and associated terminals and lugs are able to accommodate the oversized neutral conductors.

8.4.5.3 Equipment grounding conductors

Recommended practice is to install insulated EGCs with each circuit serving electronic load equipment. The use of uninsulated (bare) wire for the EGC within a conduit or raceway is not recommended. The use of uninsulated (bare) conductors is not recommended in any manner except when used for short grounding jumpers, bonding jumpers, and similar items that are not enclosed in conduit or raceway.

 Copyright © 2006 IEEE. All rights reserved.

8.4.6 Busways

Recommended practice is to use a fully enclosed, dedicated busway (without taps). This design avoids problems resulting from multiple loads being connected along the length of the same feeder. Such connected loads may interact with one another via the commonly shared wiring impedances. If a nondedicated busway is used, then a separately derived source, such as an isolation transformer or other power conditioner, should be installed at each tap that serves electronic load equipment.

The physical geometry of the phase and neutral bus bars in the busway should be configured by the OEM to provide minimum reactance and to minimize the zero-sequence magnetic field surrounding the busway. An internal EGC bus is recommended over using the metal enclosure of the busway. The internal equipment grounding bus should be properly connected to the metal enclosure.

8.4.7 Wiring devices

Branch circuit outlet wiring devices that are required to be used with individual units of electronic load equipment are identified by the OEM of electronic load equipment. They are generally specified on the associated installation data sheets provided by the manufacturer. Several standards (NEMA, IEC, etc.) exist for which electrical connectors are configured and where connectors meeting the same general interchangeable configuration (e.g., voltage/ampacity rating, size, keying, and face pattern) are made by more than one OEM. In these cases, all are basically interchangeable even though mechanical construction and materials may differ significantly among the devices. Circuits using connectors and operating at frequencies other than 60 Hz (U.S. standard) should not use connectors that are interchangeable with 60 Hz versions. Recommended practice is to use special keying for dealing with this problem, as opposed to simply using a different configuration that may be considered unique at the given location. Such uniqueness often is not maintained over the lifetime of the site. Wiring devices shall be utilized for their intended purpose. Improper installation and assembly techniques of these devices can compromise equipment safety and performance.

8.4.7.1 Single-phase receptacles

Improper terminations of conductors to wiring devices are a major source of problems due to either careless assembly, improper assembly techniques, or a combination of these factors. Unforeseen design and installation problems may create incompatibility between a conductor and its associated connector wiring terminal.

Most wiring termination problems can be controlled if the conductor and connector terminals are determined to be compatible with one another with regard to wire size range and aluminum/copper compatibility. Recommended practice is for all wiring terminations to receptacles to only use the screw-compression wiring contacts to ensure a reliable, low-resistance connection. Push-in wiring contacts that are found on common receptacles should not be used.

The receptacle and plug (cap) connected to an EGC should have a dedicated and keyed pin reserved (not field assigned) for the EGC. For neutral connections, receptacles and plugs should be designed and configured by the OEM for the purposes of connecting to a neutral conductor.

8.4.7.2 Three-phase receptacles

Wye-connected three-phase connectors supplied as part of a listed product to be connected to a branch circuit should not require a larger sized neutral conductor be connected in order to accommodate increased neutral triplen currents. This is because the NRTL providing the listing on the associated product should have evaluated the connector to ensure its suitability in the application. A wire size, no larger than the largest one that the branch circuit's receptacle is listed to accept, should be suitable. Verification of the typical connector and neutral current in these cases is recommended to avoid contact/connection

Copyright © 2006 IEEE. All rights reserved.

overheating. The receptacle and plug (cap) connected to an EGC should have a dedicated and keyed pin reserved (not field assigned) for the EGC. For neutral connections, receptacles and plugs should be designed and configured by the OEM for the purposes of connecting to a neutral conductor.

8.4.8 Raceways

Recommended practice is for all feeder and branch circuit conductors serving electronic load equipment to be fully enclosed by grounded metal conduit or raceway. Each branch circuit comprised of individual and dedicated phase, neutral, and EGCs should be in separate conduits. Metal-enclosed wireway also may be judiciously used, but such use compromises the recommended concept of keeping individual circuits separately shielded to reduce coupling of electrical noise between circuits. In addition, all signal conductors should be fully enclosed by grounded metal conduit or wireway. This is extremely important when the signal conductors are in the same vicinity as power conductors. Signal conductors should not be installed in the same raceway or conduit as power conductors. Conduits should be continuous and should be connected to building steel at multiple and random points along their length. Properly installed coupling methods between sections of conduits reduce voltage drops from ground currents. It is imperative that the surface of the enclosures be properly prepared to ensure that the conduit and coupling makes proper contact with the enclosure. For best results, bonding-type locknuts and grounding-type bushings are recommended to ensure the continuity and grounding integrity between the fitting and the equipment enclosure. Refer to 8.4.8.5 for details on conduit fittings. Insulated throat bushings are recommended at each termination to provide physical protection for the circuit conductors.

Bonding jumpers should be placed across expansion joints under all conditions. Use of ferrous metal conduit is recommended (for enhanced shielding purposes) over nonferrous conduits in all cases except for 415 Hz ac power circuits. Circuit conductors for 400 Hz applications are best routed in nonferrous metal conduit to minimize the voltage drop associated with higher losses of ferrous conduits at higher frequencies. Nonmetallic conduits and raceways do not provide shielding properties and are not a recommended practice. When wireways are used for transporting a large number of branch circuits from the panelboard to the load equipment, it is important that the individual phase, neutral, and grounding conductors be arranged and tightly bundled together to minimize induced currents in the enclosing raceway and to minimize susceptibility to disturbances associated with other circuits. The following is a list of recommended conduit materials for most premises wiring purposes in descending order of cost, conductivity, and shielding effectiveness:

a) Rigid metal conduit (RMC)
b) Intermediate metal conduit (IMC)
c) Electrical metallic tubing (EMT)
d) Flexible metal conduit (FMC)

8.4.8.1 Rigid metal and intermediate metal conduit

RMC is the best method to route circuit conductors due to its superior shielding and grounding characteristics, and mechanical strength. Equipment and installation costs make RMC more expensive to install than the generally less expensive, lighter, and easier to install IMC. Sections of these conduits are joined together by threaded metal couplings that ensure shielding and grounding integrity, provided that they are made up tight at the time of installation. Recommended practice is to use double locknuts for connections to enclosures.

8.4.8.2 Electrical metallic tubing

The typical site performs well with properly designed, installed, and maintained EMT. It is typically used where it is not subject to severe physical damage. Caution should be exercised when selecting this type of conduit. Field experience indicates fittings and couplings are often installed incorrectly or loosen over time. EMT has a thinner wall than rigid or intermediate metal conduit and is less expensive, lighter, and easier to

 Copyright © 2006 IEEE. All rights reserved.

install. Due to its thin wall, electrical metallic tubing cannot be threaded and other means must be used to join sections. Sections of this conduit are typically joined by means of setscrew or compression-type connectors, which do not provide the same magnitude of grounding integrity as the threaded connections. Accordingly, the shielding and grounding effectiveness is reduced. Recommended practice is to join sections of EMT with compression-type couplings. Setscrew-type couplings should be avoided. Connections to enclosures should be made up tight using compression-type connectors.

8.4.8.3 Flexible metal conduit

FMC does not possess the grounding and shielding effectiveness as the preceding conduit types. When FMC is used, an EGC shall be installed. Sometimes FMC is used for applications to minimize vibrations in transformer installations or to provide flexibility for connected equipment such as PDUs. FMC cannot act as the sole grounding means except under very limited conditions outlined in the NEC. Where short sections of FMC are used between a transformer and metal conduit or raceway, they should be bonded together using a low-inductance bonding means (since they are shields and may carry higher frequency currents).

In all cases where a liquid-tight form of termination is employed between a conduit and an equipment enclosure, the associated listed sealing ring or gland assembly should be used to interface the fitting to the enclosure. In some cases, this ring or gland is not only the sealing method but is also an integral part of the grounding path.

8.4.8.4 Conduit supports

Galvanized metal framing channel is generally recommended to mechanically support and to secure items in place, as well as to ground and bond items such as piping and conduit. Due to its geometry, this material makes a low-inductance grounding bus for the interconnection of pipes and conduits to one another and to building steel, or other equipment that may be bonded together. If installed properly, this channel also makes an effective higher frequency grounding bus for the connection of all associated equipment. Metal framing channel and its associated clamping hardware is generally an effective conductor for frequencies up to tens of megahertz. Wire conductors used to connect the channel to other items may create a higher inductance connection. Therefore, the channel is best used by itself as a bus directly mounted to building steel or other grounding media.

8.4.8.5 Conduit fittings

The integrity and effectiveness of all metal conduit is significantly improved if certain fittings such as grounding-type bushings, bonding-type locknuts, and grounding wedges are used. Recommended practice for new installations is to install grounding-type bushings and bonding locknuts. Metal grounding-type bushings should be installed on conduits that terminate in all switchboards, panelboards, transformers, pull boxes and junction boxes, and other metal enclosures. A grounding-type bushing is installed on the ends of conduit and contains a lug for connecting a bonding jumper from the conduit bushing to the equipment ground bus. This bonding jumper supplements the existing mechanical connection using locknuts and therefore improves the grounding integrity of the installation. For higher frequency currents, this bonding jumper should be a low-inductance type jumper such as braided copper wire. The grounding-type bushing is extremely important where an end-terminating fitting makes a mechanical connection to an equipment enclosure via a concentric knockout. Concentric ring tabs are not a reliable means of providing a good grounding or bonding path for higher frequency currents and fault currents. The bonding jumper should be terminated directly to the equipment ground bus in the equipment. If an equipment ground bus is not available, the bonding jumper should be terminated directly to the metal enclosure, using a properly prepared grounding surface and lug.

Where more than one bonding bushing is required to be bonded to an equipment ground bus in a box or other enclosure, the use of a single bonding jumper for all of the bushings may reduce the effectiveness of

Copyright © 2006 IEEE. All rights reserved.

the grounding path for high frequencies. Where practicable, a dedicated bonding jumper should be used for each grounding-type bushing to the equipment grounding bus.

Grounding-type bushings are also extremely important in applications where conduits are terminated to equipment with knockout openings too large for the intended conduit. The use of reducing washers on circuits serving electronic load equipment applications is not recommended. Such an installation does not provide effective grounding at higher frequencies. This problem is compounded when the washer set is applied over a painted or nonconductive metal surface. If a fitting or reducing washer is used, a bonding jumper should be connected to the equipment ground bus.

Bonding-type locknuts contain a screwset on the locknut to assure that the connection of the conduit to the equipment enclosure does not loosen over time from vibration or other causes. These locknuts do not provide sufficient bonding when used on concentric or eccentric rings located on the equipment enclosure.

Grounding-type wedges are useful in existing installations where the use of bonding-type locknuts or grounding-type bushings might not be economically feasible. These horseshoe-type wedges may be installed on existing equipment to effectively bond the conduit to the equipment enclosure without disconnecting the circuit conductors. These wedges are typically installed between the conduit bushing and the equipment enclosure and contain a terminal for installing a bonding jumper between the wedge and the equipment grounding terminal.

8.4.9 Pull boxes and junction boxes

All pull and junction boxes should be metal if the associated conduit and raceway system are metallic. Boxes equipped with concentric/eccentric knockout forms for conduit connections should have grounding bushings installed.

8.4.10 Metal-clad cable

Metal-clad cable is an assembly of two or more insulated circuit conductors with one or more EGCs enclosed in a metallic sheath. The metallic sheath may be of interlocked armor tape construction or a continuous smooth or corrugated construction. The NEC allows metal-clad cables to be used for a large variety of equipment and occupancies, including under raised floors of computer rooms constructed according to Article 645. The major restriction placed on metal-clad cable is that it cannot be installed where subject to physical damage.

Two features of metal-clad cable can be advantageous for use in feeder and branch circuits for electronic load equipment. The construction of metal-clad cable causes all circuit conductors to be tightly bundled together. The tight bundling reduces the intensity of the magnetic field near the cable as compared to single conductors in conduit that are not so tightly bundled. The tight bundling also reduces the self-inductance of the cable run, leading to a lower voltage drop. The metallic cable sheath provides a low-impedance, high-frequency bonding path plus electrostatic and electromagnetic shielding between the enclosed circuit conductors and other nearby conductors.

Copper circuit and equipment grounding conductors are recommended over aluminum. On an equal ampacity basis, the copper conductors have a smaller diameter resulting in a smaller center-to-center distance between conductors. Minimizing the conductors' center-to-center distance decreases the intensity of the close proximity magnetic field. The continuous-style cable sheath is recommended over the interlocked armor-type style, since the continuous sheath provides a lower impedance path and is a more effective shield. Aluminum sheathed cable results in a lower inductance cable as opposed to a galvanized steel sheathed cable and provides better electrostatic shielding, but does not provide better electromagnetic shielding than galvanized steel sheathed cable.

 Copyright © 2006 IEEE. All rights reserved.

Terminating connectors for metal-clad cable are primarily designed for their fault-current-carrying capabilities at the fundamental power source frequency, and are not necessarily designed for high-frequency bonding. Setscrew-type metal-clad cable connectors are not recommended. Metal-clad cable connectors should be of the compression-type with consideration given to providing the greatest surface area contact between the metallic portion of the connector and the cable sheath.

In areas where both metal-clad cable and conduit are permitted, metal-clad cable offers the following advantages:

a) The metal-clad cable installation is usually less expensive than conduit.

b) Continuity of the metal-clad cable sheath is virtually assured because of the manner in which the cable is constructed. Continuity of the conduit system may be questionable, primarily due to the human factor involved in the quality of coupled joints and the tendency of conduit threads to corrode over time.

c) Metal-clad cable circuit conductors are tightly bundled together as part of the cable's standard construction. Tight bundling of circuit conductors inside a conduit is typically not standard, but is possible if prelashed or multiconductor cable assemblies are used.

8.4.11 Cable tray systems

Cable tray is frequently used as part of the interconnecting wiring system where a large number of interconnecting cables are required. Cable tray is an economical alternative to raceways, such as conduit, where cable density is sufficiently high. Cable tray also provides flexibility for future additions and modifications. Cable tray is not considered a raceway by the NEC, but rather serves as a cable support system.

The most common materials used for cable tray are galvanized steel and aluminum. Other materials such as stainless steel and fiberglass are available for use in corrosive areas. Galvanized steel and aluminum are recommended for use with electronic load equipment. If corrosion resistance is required in conjunction with electronic load equipment, then it is recommended that a corrosion-resistant coating be applied over galvanized steel or aluminum. From a shielding standpoint, both galvanized steel and aluminum solid-bottom cable trays with covers provide a high degree of electrostatic shielding over a wide frequency range. Galvanized steel cable tray provides better electromagnetic shielding at low frequencies, while aluminum cable tray provides better high-frequency electrostatic shielding (see Scheide [B8]).

Cable tray systems may consist of only two levels for simple systems and eight or more levels for large, complex systems. IEEE Std 518™ provides recommendations for grouping circuits into levels and spacing requirements between levels. The recommendations in this guide are based on using solid-bottom cable tray with covers for susceptible control circuits and ladder-type cable for power circuits and less susceptible control circuits. Where power cables carry high-frequency current, such as cables connecting fast rise time pulse-width modulation (PWM) inverter drives to ac motors, it is advisable to use solid-bottom cable tray with covers for these cables to provide additional shielding. Solid-bottom cable tray provides more surface area than ladder cable tray and thus provides a lower impedance signal reference structure (SRS) between widely separated areas. Solid-bottom cable tray should be the flat-bottom type, as opposed to the corrugated-bottom type, to provide the minimum distance between the contained cables and the SRS surface. The NEC has different maximum fill requirements for ladder and solid-bottom cable tray, and additional cable ampacity derating is required when covers are used.

Metallic cable trays can serve as part of the SRS if a few basic principles are followed for its installation. To provide a low-impedance path over a wide frequency range, a large number of short-length, parallel paths of large surface area are desired. Bonding jumpers may be required or recommended at various points along the cable tray run.

Copyright © 2006 IEEE. All rights reserved.

Where bonding jumpers are specified, they should be as short as possible and be good high-frequency conductors. Where bonding jumpers are used to join two cable tray sections in the same run, two jumpers should be used, one on each side rail. Ideally, the cable tray system should form an unbroken, continuous path. If site conditions require that the continuous path be broken, then bonding jumpers are required to join the discontinuous sections. Cable tray fittings should be used rather than adjustable splice plates to change elevation in horizontal runs. If adjustable splice plates are used, then bonding jumpers should be installed across the joint. Bonding jumpers are also required across expansion joints. Under certain conditions, cable tray can serve as an EGC. It is recommended that a supplemental EGC be used, even of the cable tray qualifies for use as an EGC.

Cable tray is used in tunnels between buildings and for connecting noncontiguous areas within the same building. For new construction, it is recommended that such tunnels be fabricated using corrugated galvanized steel culvert stock, which is available in many sizes and shapes. Metal framing channel can be attached to the culvert stock to support the cable tray. The culvert stock should be bonded to building structural steel at its endpoints and where feasible at intermediate points. This type of construction is not only cost effective, but also provides a good SRS.

Metallic conduit is often used with cable tray. Where solid-bottom cable tray with covers is used, the conduits should be terminated to the cable tray side rails using locknuts on each side and a bushing on the threads. This type of termination not only provides effective bonding, but also allows easy installation and removal of covers. Care should be taken in determining the size and placement of knockouts so as not to weaken the side rails structurally. The preferred method of connecting conduit to ladder cable tray is to use a conduit to cable tray clamp listed or approved for this purpose. Where a large bank of conduits terminates to a cable tray system, it may not be feasible to terminate or clamp each conduit directly to the cable tray. In this case, each conduit should be terminated with a bonding bushing and the conduits bonded to the cable tray in the manner described in 8.4.8.5.

In a typical industrial installation, cables exit the cable tray system either above or below the equipment to which they connect. Common practice is to run the cables exposed for the short distance between the cable tray system and the equipment, using cable supports as required. The NEC requires bonding between the cable tray system and the equipment under these conditions. Recommended practice is to construct a cable support structure using galvanized steel metal framing channel connected mechanically to both the cable tray system and the equipment. The metal framing channels provide a good high-frequency path between the cable tray system and the equipment. Local code enforcement authorities may not accept the cable support structure as an acceptable bonding path between the cable tray and equipment. They may require that bonding conductors be used in addition to the support structure. These additional conductors may not provide a low-impedance path at high frequencies, unless their length is very short. For cables used on circuits that are very noise sensitive, the path between the cable tray and equipment should be via metallic conduits.

8.4.12 Power enhancement devices

The selection of power enhancement devices depends on many factors including the types of power disturbance occurrences, the susceptibility of connected electronic load equipment to various power line disturbances, and the costs associated with the various power enhancement devices. Guidelines on measuring and quantifying the types of power disturbances are outlined in Chapter 6. Guidelines on the susceptibility of certain load equipment to steady-state and transient conditions are outlined in Chapter 3. The cost justification of purchasing one power enhancement device over another is dependent on the costs incurred when data is lost, components damaged, or processes shut down due to power anomalies. Chapter 7 discusses the capabilities of various commercially available power enhancement devices.

The PDU or computer power center (CPC) is recommended as the principal means of supplying the power and grounding interface between the premises wiring system and the connected electronic load equipment, such as ITE. The PDU is generally a superior interface method to almost all available building wiring

 Copyright © 2006 IEEE. All rights reserved.

techniques. Recommended practice is to install these units as near as practicable to the electronic load equipment. However, they can be installed anywhere in the premises wiring. A listed PDU is essentially a prefabricated ac power and grounding system that includes flexible output cables or integrally mounted branch circuit panelboards to serve in place of the premises branch circuit system. PDUs typically contain some form of system monitoring, from system voltages and currents to more comprehensive monitoring, including individual output circuit monitors. These monitoring systems present information on unit operating conditions that can help manage loading to prevent unplanned shutdowns. PDUs may contain an electrostatically shielded isolation transformer, SPDs, an automatic line voltage regulating transformer, motor-generator set, and even full UPS capability, or any combination of these devices. Some PDUs may contain bypass and internal transfer switch arrangements, means for reducing the effects of harmonic currents, and means for improving power factor. Other forms of PDUs used for special applications may be constructed without an internal means of isolation or transformation. Such units should be used with externally provided power enhancement devices that are a part of the premises wiring system, and located on and bonded to the same ground reference as the PDUs.

When the nominal supply voltage is not stable, a carefully chosen power conditioning device with automatic line voltage regulation can provide the necessary voltage correction. Recommended practice is to place the device near the served electronic load equipment and bond it to the same ground reference as the electronic load equipment. The device should be configured as a separately derived system.

8.5 Grounding considerations

Proper grounding techniques are necessary for safety, equipment operation, and performance reasons. The integrity of the facility grounding, and thus the integrity of proper equipment operation, depends on proper bonding of the grounding electrode systems, proper system grounding of service equipment and separately derived sources, and proper equipment grounding for power-related frequencies as well as higher frequencies. Recommended practice is that all grounding design and installation be compliant to all applicable codes and standards. Refer to the NEC and IEEE Std 142™ for proper safety grounding techniques. Recommended practice is to utilize solidly grounded ac supply systems and install insulated (non-bare) EGCs in circuits supplying electronic load equipment. All metal equipment parts such as enclosures, racks, raceways and conduits, EGCs, and all grounding electrodes shall be bonded together into a continuous electrically conductive system. All grounding electrodes used for grounding of the power system, grounding of communications systems, and grounding of lightning protection systems shall be effectively and permanently bonded to each other as required by the NEC and NFPA 780 (see Figure 8-6). All metallic systems shall be bonded to the power system grounding electrode system at the service entrance and at each separately derived power system on the premises. Specific metallic systems included in this requirement are the main and interior cold-water piping systems, the structural building steel system, and any other earth grounding electrodes that may be present on the premises.

The metal parts of equipment enclosures and racks, conduits and raceways, and EGCs on the premises that are likely to be energized by electrical currents [due to circuit faults, electrostatic discharge (ESD), and lightning] shall be effectively grounded for reasons of personnel safety, fire hazard reduction, equipment protection, and equipment performance. Grounding these metallic objects will facilitate the operation of overcurrent protective devices during ground faults and permit return currents from electromagnetic interference (EMI) filters and SPDs, which are connected line-to-ground or line-to-chassis, to flow in proper fashion. All metallic conduits and raceways in areas containing electronic load equipment should be carefully bonded to form an electrically continuous conductor. This requirement is in addition to the recommended practice that a separate insulated EGC be installed with each branch circuit serving the electronic loads.

Copyright © 2006 IEEE. All rights reserved.

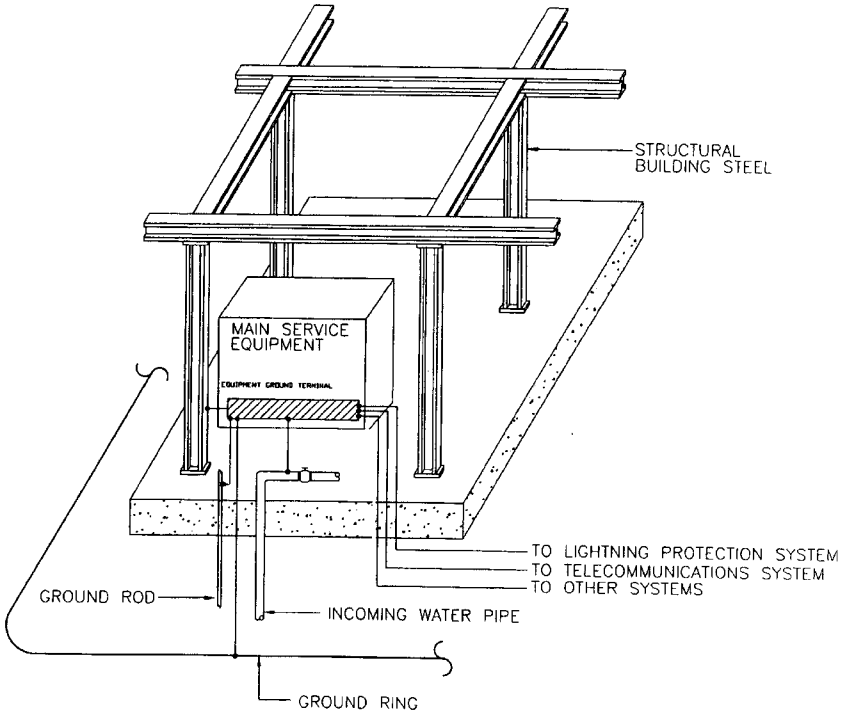

Figure 8-6—Interconnection of building grounding electrodes

Recommended practice is that all grounding and bonding connections for metal piping systems be noted on the appropriate mechanical and electrical drawings. The use of clear, standardized, and detailed drawings to show design intent is strongly recommended to ensure consistent interpretation by the installing personnel. Drawings of existing buildings should also be reviewed for grounded and bonded items that are not properly noted. All mechanical equipment in the electronic equipment areas should be effectively grounded for electrical safety (NEC), for lightning protection (NFPA 780), and for noise-current control. Such equipment (including building steel, metallic structural framing, equipment chassis, piping, ducting, and electrical conduit and raceways) should be grounded or bonded to local building steel using direct or higher frequency grounding and bonding means. When located in the same area as the electronic load equipment, mechanical equipment should be bonded at multiple points to the same ground reference as the electronic load equipment. Heating, ventilation, air conditioning and process cooling equipment, and related metal piping and electrical conduits are recommended to be bonded to the same ground reference serving the electronic load equipment.

8.5.1 Grounding electrode system

The installation of separate grounding electrodes that are intentionally not bonded to the power system grounding electrode system is strictly forbidden by the NEC. Such separate grounding electrodes typically take the form of driven ground rods that are installed in an unapproved attempt to isolate certain pieces of equipment from the power system ground. This installation technique violates the NEC and may cause extreme and hazardous voltage conditions to exist between differently grounded metal objects during power system faults and lightning activity.

It is easier to provide a reliable grounding system for electronic load equipment housed in buildings constructed of structural steel. Buildings constructed of reinforced concrete are not as effective for grounding and intersystem bonding separately derived sources located remotely from the service entrance. This is compounded in some modern facilities that utilize nonmetallic means for interior water piping. Where building steel is accessible, it should be effectively grounded and bonded into a single, electrically

 Copyright © 2006 IEEE. All rights reserved.

conductive mass. Such grounding and bonding may be by compression connections, mechanical fittings, welding, bolting, or riveting. The building steel system should be bonded to the grounded service conductor (typically the neutral) and the EGCs at the service entrance, and to the main (metallic) cold-water piping system. Effective grounding (earthing) of the structural building steel system is recommended and should be accomplished by one or more of the following means:

a) By bonding the rebars that are encased in the concrete footings to the anchor bolts that fasten the structural steel to its concrete base.

b) By a made earth grounding electrode system, such as a buried ground ring connected at multiple points to building steel.

8.5.1.1 Metal underground water pipe

Due to the increased use of nonmetallic water piping systems, the metal underground water pipe is no longer permitted to be solely used as a grounding electrode per the NEC. Where the metal underground water pipe enters a facility, it shall be supplemented by at least one other grounding electrode as described in the NEC.

8.5.2 System grounding

System grounding refers to the intentional connection of a circuit conductor (typically the neutral on a three-phase, 4-wire system) to earth. Separately derived power sources and power service entrances are required to be grounded. The purpose of the system ground is for both electrical safety to personnel and equipment, and fire safety reasons. System grounding also impacts the performance of electronic load equipment for reasons relating to the control of common-mode noise and lightning current.

From a safety standpoint, solidly grounded and properly bonded power systems promote the timely operation of overcurrent protective devices in case of ground faults, limit the potential difference between grounded objects, stabilize the phase voltages with reference to ground, and limit transient voltages due to lightning and load-switching. From a performance standpoint, solidly grounded power systems are recommended practice to ensure the existence of an effective conductive path for the return current of filters and SPDs connected line-to-ground or line-to-chassis. These filters and SPDs may be an integral part of the electronic load equipment or may be separately mounted devices located in the building electrical distribution system. Recommended practice is to design for the lowest reasonable impedance between the load equipment containing a filter or SPD and the associated power system source. Low-inductance wiring methods should also be used.

If a separately derived source (e.g., a transformer, inverter winding, or alternator) is used, the secondary grounded circuit conductor (e.g., neutral) shall be bonded to the equipment grounding terminal or bus of the separately derived source and grounded to the nearest effectively grounded electrode (typically, building steel). If no effectively grounded electrode or building steel is available, then the separately derived source should be connected to the service entrance grounding point via a dedicated grounding electrode conductor installed in the most direct and shortest path practicable. In either case, if metal interior piping is present near the separately derived source or in the area served by the separately derived source, a supplemental grounding electrode conductor should also be installed from the equipment grounding terminal or bus of the separately derived source to the metal interior water piping.

There are basically two requirements for grounding power services and separately derived systems. The first requirement is to bond the grounded circuit conductor to the grounded enclosure. For power service entrances, the incoming neutral conductor is bonded to the equipment ground bus in the switchboard by means of the main bonding jumper. For separately derived sources, the derived neutral is bonded to the equipment grounding terminal or bus on the enclosure of the transformer, UPS, generator, or other equipment that meets the definition of separately derived source. The second requirement is that the equipment ground bus in the power service switchboard or the equipment grounding terminal or bus of the separately derived source be connected to the nearest effectively grounded electrode by means of the

Copyright © 2006 IEEE. All rights reserved.

grounding electrode conductor. Location of the bonding jumper or connection of the grounding electrode conductor to the power system neutral in the meter base or other intervening location is not recommended. Figure 8-7 illustrates the recommended technique for fulfilling system grounding requirements of a typical isolation transformer. A ground bus should be attached to the transformer frame when there is insufficient room on the neutral bus to terminate all of the required conductors.

It is important to note that the NEC prohibits connecting the grounded circuit conductor (typically the neutral) to the EGC at more than one point. This requires careful consideration when determining system grounding requirements of UPS systems with bypass circuits. The proper grounding of UPS systems is critical from a personnel safety, and equipment protection and performance standpoint. The following are recommended practices for properly grounding various UPS system and load configurations. The intent is to show typical UPS configurations with particular attention directed toward system grounding requirements in compliance with the NEC. Other UPS configurations exist and should be addressed on an individual basis.

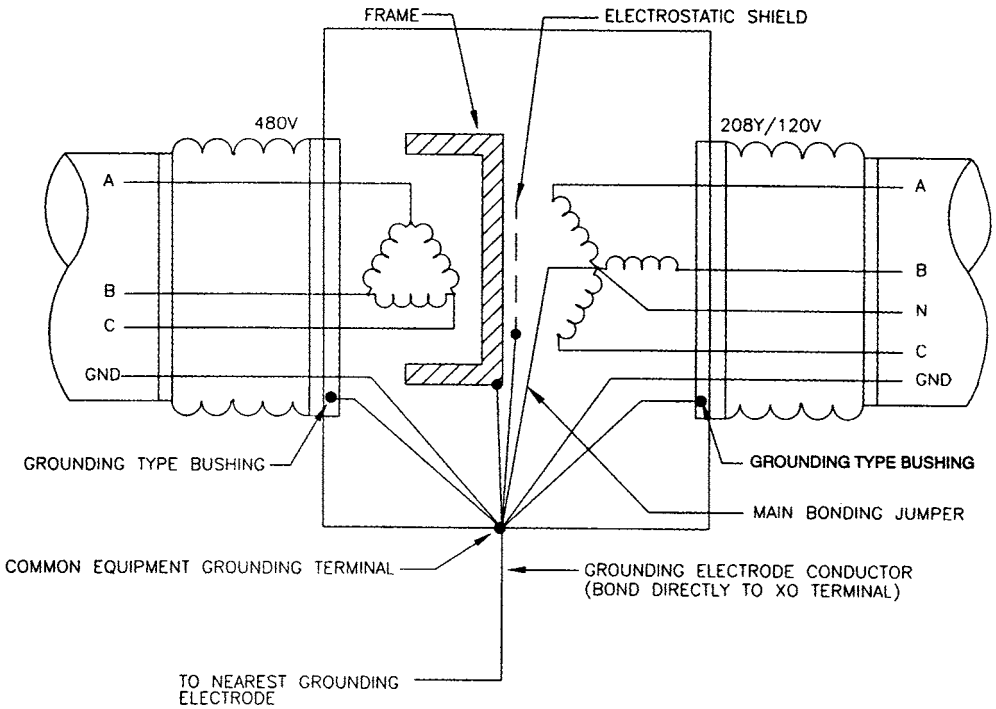

Figure 8-7—System grounding requirements of isolation transformer

8.5.2.1 UPS grounding schemes

8.5.2.1.1 Configuration 1—Single UPS module, nonisolated bypass, grounded-wye service

In this arrangement (see Figure 8-8), a grounded-wye service is connected to both the main input and bypass (reserve) input of a single UPS module, and the power distribution center does not contain an isolation transformer. The neutral, which is bonded to the grounding conductor at the service entrance equipment, is brought into the UPS module.

Grounded/grounding conductor arrangement

Since the UPS module output neutral is solidly connected to the bypass input (service entrance) neutral, the UPS module is not considered a separately derived system according to the NEC. In this system

a) The UPS neutral should not be bonded to the EGC; and

b) No local grounding electrode conductor should be installed to the UPS module.

 Copyright © 2006 IEEE. All rights reserved.

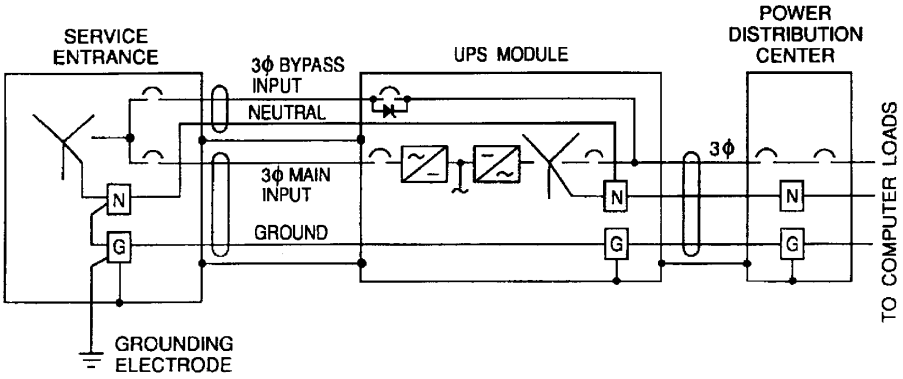

Figure 8-8—Configuration 1

Features/performance

While this arrangement may be typical for 208 V input/208 V output UPS systems, it does not provide any isolation or common-mode noise attenuation for sensitive loads. It appears that ground-fault current from the inverter may adversely affect the service entrance ground-fault relay for standby generators, as shown in Chapter 7 of IEEE Std 446. In many cases, the inverter cannot supply ground-fault current since the static switch will transfer because of the fault-depressed voltage.

8.5.2.1.2 Configuration 2—Single UPS module, isolated bypass

In this configuration (see Figure 8-9), a bypass transformer is used to feed the bypass input of the UPS module. The bypass transformer and UPS module together constitute a separately derived system, since there is no direct electrical connection between the input (service entrance) circuit conductors and the output circuit conductors.

Grounded/grounding conductor arrangement

Since this configuration is considered a separately derived source, the neutral of the UPS module should be bonded to the EGC, and a local grounding electrode module should be installed. (In this particular system, the bonding of the neutral to the grounding conductor could be done at either the bypass transformer or at the UPS module— the UPS module is chosen for the point of bonding because it is in the normal power flow and is electrically closer to the load). The bypass transformer is used in the bypass input to provide isolation and to step down the voltage if required (e.g., in a 480 V input/208 V output configuration).

Features/performance

With this arrangement, isolation from the input is achieved and common-mode noise attenuation can be obtained for the electronic loads if the UPS and bypass transformer are located electrically close [recommendation is 15.2 m (50 ft) or less] to the power distribution center and the sensitive loads.

Copyright © 2006 IEEE. All rights reserved.

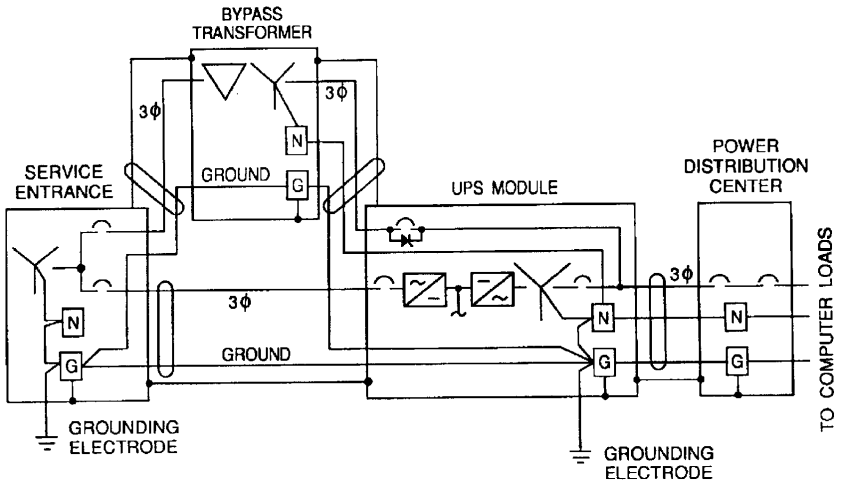

Figure 8-9—Configuration 2

8.5.2.1.3 Configuration 3—Single UPS module, nonisolated bypass, isolated distribution center

In Configuration 3 (see Figure 8-10), the UPS module main input and bypass input are connected to a grounded-wye service in the same manner as Configuration 1.

Ground/grounding conductor arrangement

As explained in Configuration 1, the UPS module is not considered to be a separately derived source, since the neutral is bonded to the grounding conductor at the service entrance equipment and is solidly connected to the UPS module output neutral. Therefore, the UPS neutral would not be bonded to the EGC in the UPS module. However, the power distribution center is provided with an isolation transformer and is considered a separately derived source. Therefore, the power distribution center neutral should be bonded to the EGC and should be connected to a local grounding electrode.

Features/performance

This arrangement can be applied to 208 V input/208 V output UPS modules, as well as to 480 V input/480 V output UPS modules. (The voltage step-down to 208 V occurs in the power distribution center). The common-mode noise attenuation of this arrangement is better than Configuration 1 or Configuration 2, since the isolation (common-mode rejection) occurs as close to the load as is practical. Using this configuration, the UPS module can be located remotely from the power distribution center without compromising the common-mode noise performance. Also, by using 480 V input/480 V output UPS modules, smaller and less costly power feeders can be used and less voltage drop (as a percent of nominal) can be obtained. This is the preferred arrangement when using UPS modules and power distribution centers.

 Copyright © 2006 IEEE. All rights reserved.

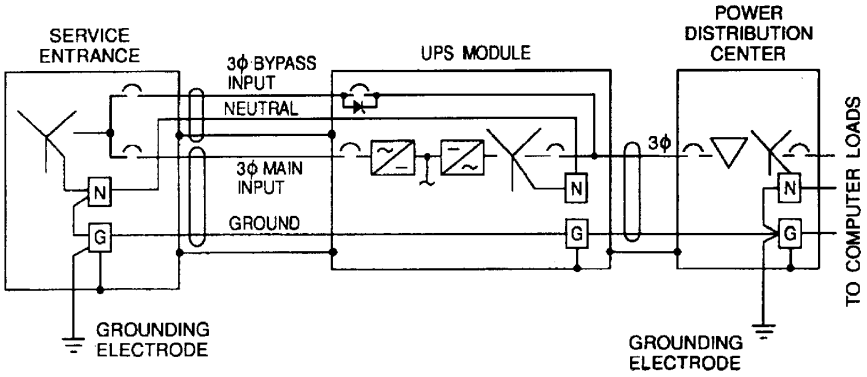

Figure 8-10—Configuration 3

8.5.2.1.4 Configuration 4—Single UPS module, 3-wire bypass, isolated distribution center, grounded-wye service

Configuration 4 is similar to Configuration 3 except that the service entrance neutral is not included in the bypass input power feed.

Grounded/grounding conductor arrangement

In Configuration 4, the neutral of the service entrance equipment is not brought into the UPS module. The UPS module is, therefore, considered a separately derived source. As such, the neutral should be bonded to the EGC, and a local grounding electrode conductor should be installed. Since the power distribution center contains an isolation transformer, it also is a separately derived source. This neutral should also be bonded to the EGC and to a local grounding electrode.

Features/performance

The scheme shown in Figure 8-11 serves as an alternative to the scheme shown in Figure 8-10 when no neutral is available for the bypass input, provided that

a) The main input and bypass input are fed from the same source;
b) The source is a solidly grounded wye source; and
c) No neutral is required for the UPS load.

With some UPS systems, the neutral should be included with the bypass input, even if not required for the output, because the neutral is used for sensing and monitoring of the bypass input.

As in Configuration 3, since the power distribution center contains an isolation transformer, isolation and common-mode noise reduction occurs when the center is located as close to the load as is practical.

Copyright © 2006 IEEE. All rights reserved.

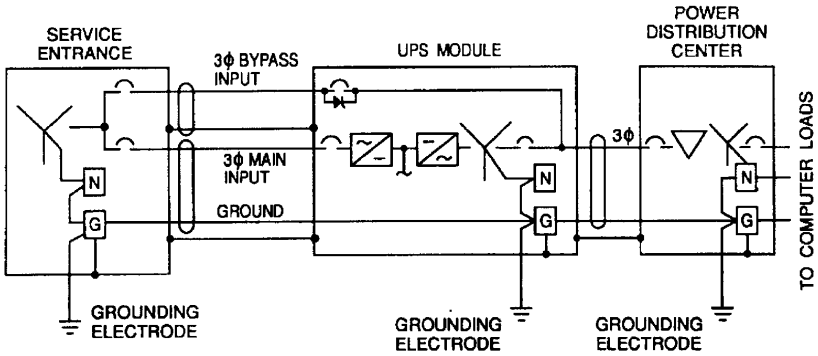

Figure 8-11—Configuration 4

8.5.2.1.5 Configuration 5—Single UPS module, isolated bypass, delta-connected source

Configuration 5 (see Figure 8-12) is similar to Configuration 2, with the exception that the input power source (service entrance) is delta-connected. Most UPS modules require that the bypass input be fed from a wye-connected source. Therefore, when the UPS module is used with other than a wye-connected source, the bypass input should be fed from a bypass transformer with a wye-connected secondary.

Grounded/grounding conductor arrangement

In Configuration 5, as in Configuration 2, the UPS module neutral should be bonded to the EGC, and a local grounding electrode conductor should be installed.

Features/performance

With this arrangement, as in Configuration 2, isolation from the input is achieved, and common-mode noise attenuation can be obtained for the electronic loads if the UPS and bypass transformer are located electrically close [recommended 15.2 m (50 ft) or less] to the power distribution center and to the electronic loads.

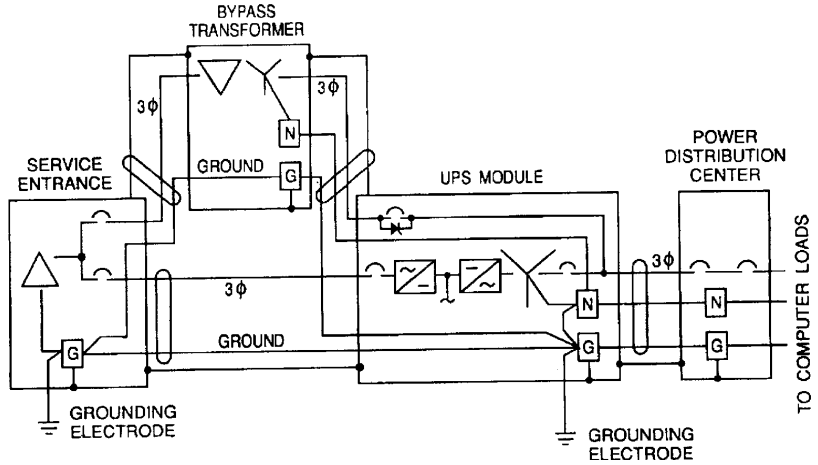

Figure 8-12—Configuration 5

 Copyright © 2006 IEEE. All rights reserved.

8.5.2.1.6 Configuration 6—Multiple-module UPS system example

In general, a multiple-module UPS system may be thought of as being an extension of a particular single-module system, except that the UPS "block" is now composed of more than one UPS module, and everything (including the bypass) feeds through a stand-alone static transfer switch (STS). As an example, consider Figure 8-13 as the multiple-module extension of the same grounding scheme shown in Figure 8-11.

Grounded/grounding conductor arrangement

Figure 8-13 illustrates one of the grounding schemes for multiple UPS modules with a stand-alone static switch. In this configuration, the bypass transformer and UPS modules 1 and 2 are considered to be a separately derived system, since there is no direct electrical connection between the input and output circuit conductors. In order to provide a central point for bonding the UPS output neutral to the ground for the entire UPS scheme, the stand-alone static switch is utilized. (When the neutral is bonded to the grounding conductor in the stand-alone static switch, full-size neutrals shall be run from the UPS modules and bypass transformer to the static switch, regardless of whether the neutral is required for the static switch loads.) The neutral-to-grounding-conductor bond, and the local grounding electrode conductor should be installed.

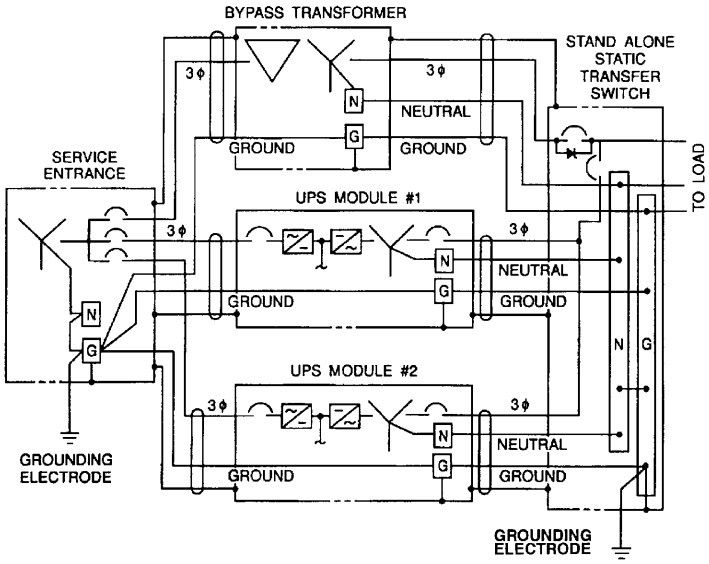

Figure 8-13—Configuration 6

Features/performance

By using the static switch to provide the central point for bonding the neutral to the grounding conductor, as in this sample multiple-UPS module configuration, a UPS module could be removed from, or added to, the overall scheme without jeopardizing the integrity of the grounding system.

Depending upon the multiple-module configuration, the grounding concepts of single-model Configurations 1 through 5 can be applied.

8.5.2.1.7 Configuration 7—Multiple-module 415 Hz UPS system

In Configuration 7 (see Figure 8-14), the 415 Hz UPS module main input is connected to the grounded-wye service in the same manner as the previous 60 Hz UPS configurations. No bypass feed is used with 415 Hz UPS modules.

Copyright © 2006 IEEE. All rights reserved.

Grounded/grounding conductor arrangement

In Configuration 7 there is no bypass feeder, so the neutral of the service entrance equipment is not connected to the UPS output neutral. The UPS module is considered a separately derived source. As such the UPS output neutral should be bonded to the EGC and a local grounding electrode conductor should be installed. In this case, both UPS modules would meet the NEC requirements for a separately derived source. To provide a central point for bonding the UPS output neutral to the ground for the entire UPS system, the neutral-to-grounding-conductor bond should be made in the output switchgear (if a single 415 Hz UPS module is used, the neutral-to-grounding-conductor bond should be made inside the UPS module).

Features/performance

Using the output switchgear to provide the central point for bonding the neutral to the grounding conductor allows a UPS module to be removed or added to the parallel system without jeopardizing the integrity of the grounding system.

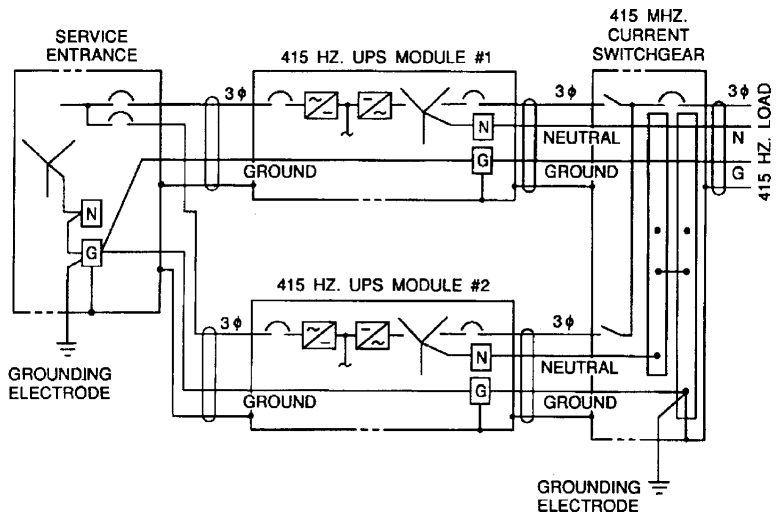

Figure 8-14— Configuration 7

8.5.2.1.8 Configuration 8—Single UPS module with maintenance bypass switchgear

In Configuration 8 (see Figure 8-15), maintenance bypass switchgear is used to completely isolate the UPS module from the critical ac load during maintenance and off-line testing. A grounded-wye service is connected to the main input and bypass input of a single UPS module and to the maintenance bypass switchgear. If the neutral is required for the critical load, the neutral (which is bonded to the grounding conductor at the service entrance equipment) is brought into the UPS module and the maintenance bypass switchgear.

Grounded/grounding conductor arrangement

Since the UPS output neutral and the maintenance bypass switchgear neutral are connected to the service entrance neutral, the UPS module is not considered a separately derived system according to the NEC. In this system

a) The neutrals of the UPS output and the maintenance bypass switchgear should not be bonded to the EGC; and

b) No local grounding electrode conductor should be installed.

 Copyright © 2006 IEEE. All rights reserved.

Features/performance

This arrangement does not provide any isolation or common-mode noise attenuation for electronic loads. If a power distribution center with an isolation transformer is provided downstream from the UPS system (near the electronic load), the common-mode noise attenuation of this arrangement would be greatly improved. Also, since the power distribution center with transformer requires only a three-phase, 3-wire plus ground input, the neutral conductor would not need to be connected from the service entrance to the UPS bypass and from the service entrance or the UPS output to the maintenance bypass switchgear (see Figure 8-16).

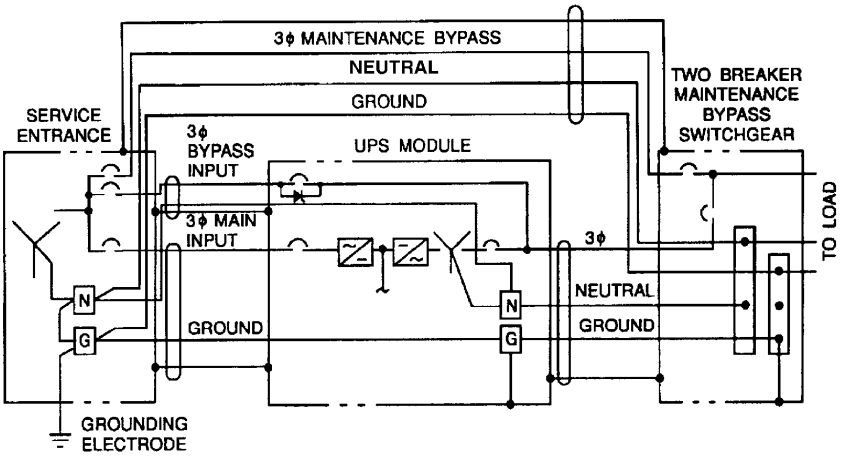

Figure 8-15—Configuration 8 (4-wire)

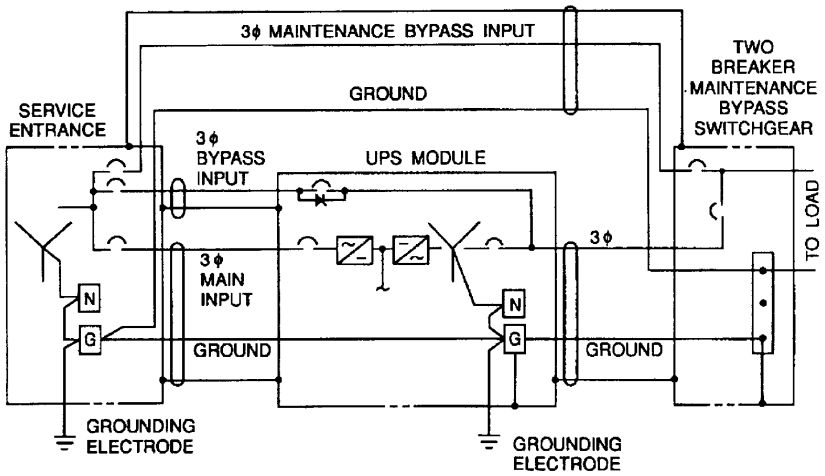

Figure 8-16—Configuration 8 (3-wire)

8.5.3 Equipment grounding

The term *equipment grounding* refers to the connection to power system ground of all non-current-carrying metallic parts of a power system that may come into accidental contact with circuit phase and neutral conductors. These metallic parts include raceways, conduits, EGCs, and equipment enclosures and racks. All these items are ultimately grounded together at the grounding electrode of the power service or separately derived system. Equipment grounding is required for both personnel safety and power system protection.

Copyright © 2006 IEEE. All rights reserved.

From a personnel safety standpoint, properly grounded system components minimize potential differences that may exist between various system components under steady-state and transient conditions. From a system protection standpoint, properly grounded system components provide a low-impedance path for ground-fault currents and promote the timely operation of overcurrent protective devices in case of ground faults.

Recommended practice is to use insulated (non-bare) EGCs installed in grounded metal conduit and run with the other circuit conductors feeding electronic load equipment. Although the installation of an insulated EGC to supplement the grounded raceway or conduit is not required by the NEC, this additional EGC is vital for circuits serving electronic load equipment. The intent of the EGC is twofold. In standard equipment grounding configurations, the EGC provides a supplemental low-impedance ground path in parallel with the metallic conduit or raceway from the electronic load equipment to the power system or separately derived system. In insulated ground configurations, the additional EGC provides the sole grounding path from the electronic load equipment to the power system or separately derived system. The grounded metallic conduit acts as an electromagnetic shield for the circuit serving the electronic load equipment. In either case, the insulated EGC(s) shall be run in the same raceway or conduit as the phase and neutral conductors. Grounding configurations provide equalizing of potential between grounded objects at 60 Hz. But as the frequency increases, other grounding means must also be considered to cover frequencies in higher ranges.

8.5.3.1 Standard equipment ground configuration

The standard equipment ground configuration uses an insulated EGC, typically green in color, run with the phase and neutral conductors to supplement grounded metal raceway and conduit. The conduit and raceway systems may rely solely on the integrity of mechanical connections at conduit and raceway joints, panelboards, junction boxes, pull boxes, and at the receptacles themselves. Ineffective grounding paths can compromise personnel safety as well as the operation of surge suppressors and filters located in electronic load equipment. In addition, currents flowing on grounded surfaces may take less desirable paths, such as through load equipment and associated data cables. The purpose of the insulated EGC is to augment the reliability of the grounded metal conduit system. The proper installation of conduits, raceways, and interconnected equipment to provide an effective low impedance, effective ground path cannot be overemphasized.

Recommended practice is for the insulated EGCs to be sized per the NEC table for EGCs and be properly connected and bonded to each metal enclosure that it passes through from the separately derived system or power service to the electronic load equipment. These metal enclosures include all distribution panelboards, safety switches, circuit breaker enclosures, transformers, and branch circuit panelboards, as well as all pull boxes, junction boxes, and metal outlet boxes.

There are different types of conduit systems that offer better shielding and grounding properties than others. In all cases, the recommended practice is for grounding bushings (and associated grounding conductors) to be installed to supplement the mechanical connections at each location that the conduit system is connected to metal enclosures. These different types of conduit systems, their recommended installation practices, and the application of grounding bushings are discussed in more detail in 8.4.8.

8.5.3.2 Insulated ground configuration

The insulated ground configuration also uses an insulated EGC, typically green in color with yellow stripe, run with the phase, neutral, and standard EGCs from the electronic load equipment to the equipment grounding terminal of the power system or separately derived system. As opposed to the standard equipment grounding configuration, this additional insulated EGC typically connects the insulated ground receptacle (IGR) only to the equipment grounding terminal or bus of the power system source or separately derived system. This EGC extends radially downstream to the chassis of the electronic load equipment without contacting any grounded metal surfaces such as metal conduits and raceways, panelboards, and outlet boxes for receptacles (see Figure 8-17 and Figure 8-18). When this equipment grounding configuration is used, the

 Copyright © 2006 IEEE. All rights reserved.

enclosing metal raceway must still be properly grounded. This type of equipment grounding configuration is only intended to be used for reducing common-mode electrical noise on the electronic load equipment circuit as described in the NEC. It has no other purpose and its effects are variable and controversial. The use of the traditional orange-colored insulated grounding receptacle for the express purpose of identifying computer grade power is not allowed per the NEC. If unacceptable EMI is found to be active on the circuit, an insulated grounding receptacle circuit may be considered as one potential mitigation method. Robust design of the electronic load equipment for immunity to disturbances on the grounding circuit is another method. Particularly for distributed computing and telecommunications electronic loads, using optical signaling interfaces reduces susceptibility to disturbances on the grounding circuit.

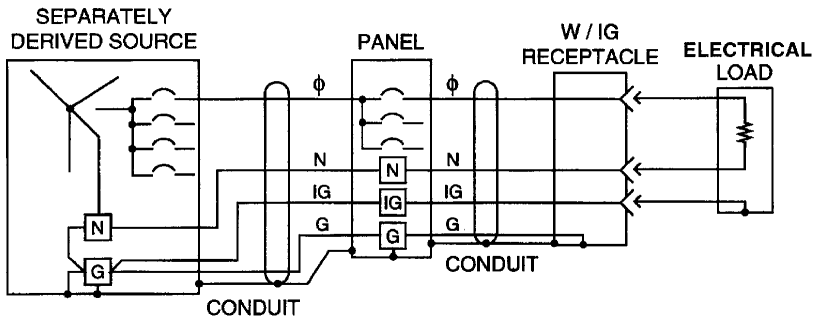

Figure 8-17— Insulated grounding conductor pass through distribution panel

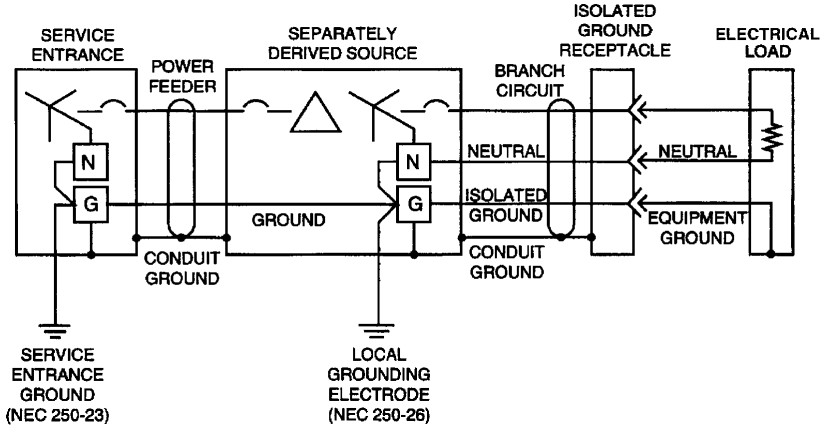

Figure 8-18—Insulated grounding conductor wiring method with separately derived source

Results from the use of the insulated ground method range from no observable effects, the desired effects, or worse noise conditions than when standard equipment grounding configurations are used to serve electronic load equipment. These effects (if any) will be somewhat proportional to the overall length of the circuit (see Lewis [B5]). The greater the length of the circuit, the greater the expected effects of the insulated equipment grounding circuit. However, these effects may again be either increased or decreased noise conditions. Application of the insulated equipment grounding configuration in close proximity to the system deriving the insulated ground circuit will normally not produce any practical effects. However, as the length of the insulated equipment grounding circuit increases, another concern arises. Under lightning or power system fault conditions, the potential difference between the electronic load equipment and grounded objects may be sufficient to cause a safety hazard or disrupt electronic load equipment performance.

Copyright © 2006 IEEE. All rights reserved.

The insulated grounding configuration is only directly applicable to metal-enclosed wiring means and has no useful purpose with nonmetallic wiring systems. Nonmetallic wiring systems are at least partially constructed as if they are insulated grounding types, since no metal conduit or raceway is involved in the wiring path to be bonded to the EGC of the circuit. An exception is where the branch circuit outlet is locally bonded to a grounded metallic object. In any case, the nonmetallic wiring system does not provide electromagnetic shielding for the enclosed circuit conductors and should not be used. Safety and performance concerns related to the length of the nonmetallic wiring system are similar to those described for the insulated grounding receptacle circuit.

The use of the insulated ground configuration may provide beneficial effects to circuits that supply electronic load equipment that do not otherwise connect to grounded objects. The conduit acts as a shield for the circuit conductors and the insulated EGC against radiated noise. In addition, conducted ground currents are discouraged from entering the electronic load equipment. However, if the electronic equipment contains other connections to grounded objects, the integrity and purpose of the insulated grounding configuration is defeated. These connections to ground may be either intentional or unintentional. Typical examples of these connections are interconnections of various equipment through grounded shields of data cables and bonding of equipment chassis to grounded metal equipment racks. These connections defeat the intent of the insulated grounding configuration and may allow conducted ground currents to enter electronic load equipment and may also encourage induced currents from the power conductors to take less desirable paths — such as through data cables (see Gruzs [B1]). Proper installation of the insulated equipment grounding configuration relies on the use of special receptacles, special equipment grounding buses, and proper installation practices concerning the routing and identification of the insulated EGC.

8.5.3.2.1 Insulated grounding receptacles

Branch circuit (and listed ac power interconnecting cable) outlet receptacles served by continuous, metallic raceways may be wired as an insulated equipment grounding configuration. This configuration requires the use of listed insulated grounding receptacles in which the EGC pin is factory insulated from the metal mounting yoke of the receptacle. EGCs shall terminate to the ground pin for safe and proper operation of the connected load equipment. Previous listed insulated ground receptacles were identified by an orange color. In addition, some receptacles had a triangle or delta embossed on the face of the receptacle. Insulated ground receptacles meeting current listing requirements are permanently identified by an embossed orange-colored triangle or delta on the face of the receptacle, and the receptacle may be of any color. Current listing standards permit standard receptacles to be of any color, including orange. Therefore, unless an orange-colored triangle or delta is embossed on the face of the receptacle, it should never be assumed to be an insulated grounding-type receptacle. Recommended practice is for the color of the insulated grounding receptacles to be consistent throughout the facility to differentiate them from standard grounding receptacles.

The designer is allowed to choose the point between the power system or separately derived system supplying the circuit at which the receptacle EGC pin and the metal conduit or raceway or equipment enclosure system are made common. Such a connection shall conform to the requirements of the NEC. In general, the choices for grounding the upstream end of the insulated EGC are limited to the first panelboard, other upstream panelboards or switchboards, or the separately derived system supplying the circuit. An insulated equipment grounding arrangement may be continued from the receptacle upstream to a point no further than the first power system ground at the separately derived system or service entrance for that receptacle.

8.5.3.2.2 Insulated ground bus

Switchboards, panelboards, or other equipment may require both an insulated equipment grounding bus and a standard equipment grounding bus within the same enclosure. The same bus logically cannot be used for both under all conditions, e.g., where the insulated equipment grounding circuit is continued upstream through a panelboard. However, if a specific piece of equipment is actually the termination point for the

 Copyright © 2006 IEEE. All rights reserved.

insulated EGC, it is possible to use the same equipment grounding bus for both the standard EGCs and the insulated EGCs within that equipment's enclosure. A common situation is where only the branch circuits are insulated equipment grounding and standard equipment grounding styles, and are terminated within the panelboard containing the overcurrent protection for these branch circuits. In this case, a separate insulated equipment grounding bus and a standard equipment grounding bus are recommended to be provided within the same panelboard. Separate equipment grounding buses facilitate the convenient measurement of the total insulated equipment grounding current to the panelboard's metal enclosure via the low-inductance grounding jumper between the two equipment grounding buses.

8.5.3.2.3 Routing of insulated grounding conductors

All insulated EGCs should be sized per the requirements of the NEC and are required to be routed within the same metallic conduit or raceway as the associated phase, neutral, and standard EGCs for the entire length of the involved circuit. Terminations of the insulated EGCs similarly shall remain within the associated equipment enclosure. Failure to adhere to this requirement will significantly increase the effective impedance of the insulated EGC during both fault conditions and normal conditions. This condition will negatively affect the operation of overcurrent protective devices, SPDs, and filters located in electronic load equipment, and may cause currents flowing on grounded surfaces to take less desirable paths such as through electronic load equipment and associated data cables. The use of any separate or isolated form of earth grounding electrodes for use as a point of connection of the insulated EGC is a violation of the NEC. Such an improper insulated grounding (IG) scheme does not meet code requirements for effective grounding. The generally perceived need for an isolated earth grounding electrode scheme in relation to the isolated method is not based on good engineering judgment. In the past, this unsafe method of grounding has been erroneously promoted in both advertisements and articles in various trade publications, and in obsolete technical information provided by misinformed vendors. More recent publications do not promote this erroneous method and tend to point out the fallacy of this method.

Improper installation of an isolated form of grounding electrode for the insulated EGC has two major flaws:

a) Under ground-fault conditions, this path forms a high-impedance return path that may desensitize or prevent the operation of overcurrent protective devices.

b) There is an inherent inability to limit the potential developed between the insulated equipment grounding electrode, the connected equipment, and other accessible grounded objects.

Lightning commonly creates conditions of several thousands to tens of thousands of volts between two (or more) such earth grounding electrodes according to FIPS PUB 94. System ground faults may create similar problems in relation to the power system's nominal line-to-ground voltage and the fault-current magnitude. These conditions result in problems ranging from personnel hazard to equipment malfunction to component damage.

8.5.3.2.4 Identification of insulated grounding conductor

The insulated EGC should have green-colored insulation with a longitudinal yellow stripe. Black insulated conductors used for this equipment grounding function (typically larger than 6 AWG) should be color-coded with a combination of green and yellow tapes, applied next to each other, at both ends of the conductor and at all accessible locations along the length of the conductor.

Direct-connected (hardwired) circuits employing the insulated equipment grounding configuration should have their conduit, raceway, or cable sheath prominently and permanently identified as such. This identification should be minimally made by labeling with an orange triangle symbol or by finishing both ends of the circuit with an orange color.

Copyright © 2006 IEEE. All rights reserved.

8.5.4 High-frequency grounding configuration

An SRS should be employed as the basic means of achieving a high-frequency common ground reference for all equipment within a contiguous area. A properly designed and installed SRS effectively equalizes ground potential over a broad range of frequencies from dc through the megahertz range. Accordingly, although it is often referred to as a high-frequency ground reference structure, it may be best described as a broadband ground reference system. The SRS typically can be economically and effectively constructed in the form of a signal reference grid. The use of a signal reference plane (SRP) may be recommended for some applications where the subject system operates at a higher frequency than the typical signal reference grid design cut-off frequency.

Hybrid forms of SRS employing mixtures of signal reference grid and SRPs for varied construction and improved overall performance are also useful. They are used where the benefits of each type of SRS are needed for the collective support of a variety of interconnected electronic load equipment that is susceptible to common-mode noise current.

Improved high-frequency grounding for data signaling cables between (noncontiguous) areas can typically be accomplished by reducing the open-loop area enclosed by the cable and its grounded surroundings. This is typically accomplished via the use of metal conduit or electrically continuous, solid-bottom, metal cable tray, wireway, or similar forms of signal transport ground-plane construction (see Lewis [B4]). These items should be used with supplementary grounding paths (e.g., frequent bonding to building steel or steel structural subfloor decking).

Recommended practice for high-frequency referencing of electronic load equipment does not involve the earth or any earth grounding electrode system except for electrical and fire safety purposes, as described in the NEC and NFPA 780. Earth and earth-related paths are not a desired or effective part of the signal path. Higher frequency grounding principles are further discussed in Chapter 4.

An SRS may be typically constructed using one of the following four methods (in decreasing order of effectiveness):

a) Solid covering of sheet metal

b) Grid of copper straps

c) Grid of copper or aluminum wire

d) Raised flooring substructure

When it is not practical or feasible to utilize these means (specifically, when equipment is located in areas outside equipment rooms), other possibilities for SRS involve the use of welded steel mesh such as that used in concrete reinforcing, galvanized steel sheet floor decking, welded galvanized steel screen with 6 mm to 13 mm (0.25 in to 0.5 in) openings, or very thin copper or aluminum foils [0.375 mm (0.015 in) to 0.75 mm (0.03 in) thick] applied directly to the structural subfloor via adhesive or other suitable means. A sheet metal SRP or grid formed from thin foil may be installed directly beneath carpeting or similar floor covering, without being appreciably noticeable. Figure 8-19, Figure 8-20, Figure 8-21, and Figure 8-22 illustrate various methods of creating signal reference grids in these cases.

8.5.4.1 Solid covering of sheet metal

The most effective (and most costly) SRS is one that is completely solid. This can be fabricated by using solid sheet metal and solidly connecting all equipment directly to the sheet metal using low-inductance means. This form works well in applications such as metal bulkheads used to terminate incoming power and communications cables and their respective shielding and surge protective devices. They may not be cost-justifiable when installed in large areas such as large ITE and telecommunications rooms.

 Copyright © 2006 IEEE. All rights reserved.

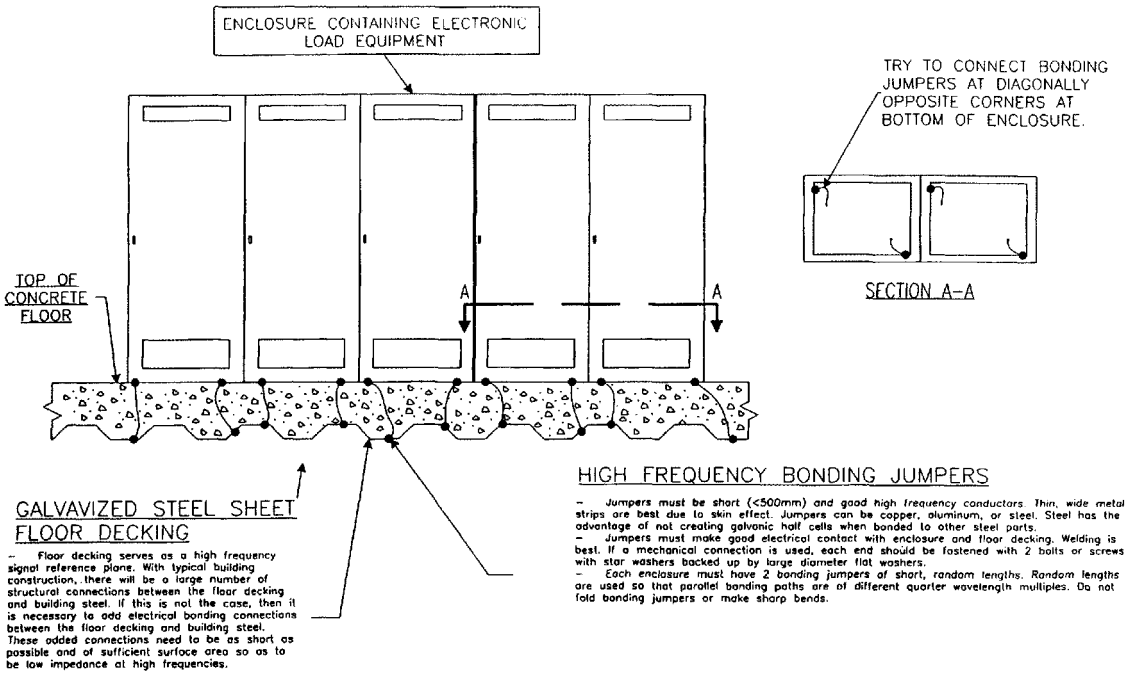

Figure 8-19—SRP utilizing galvanized steel sheet floor decking

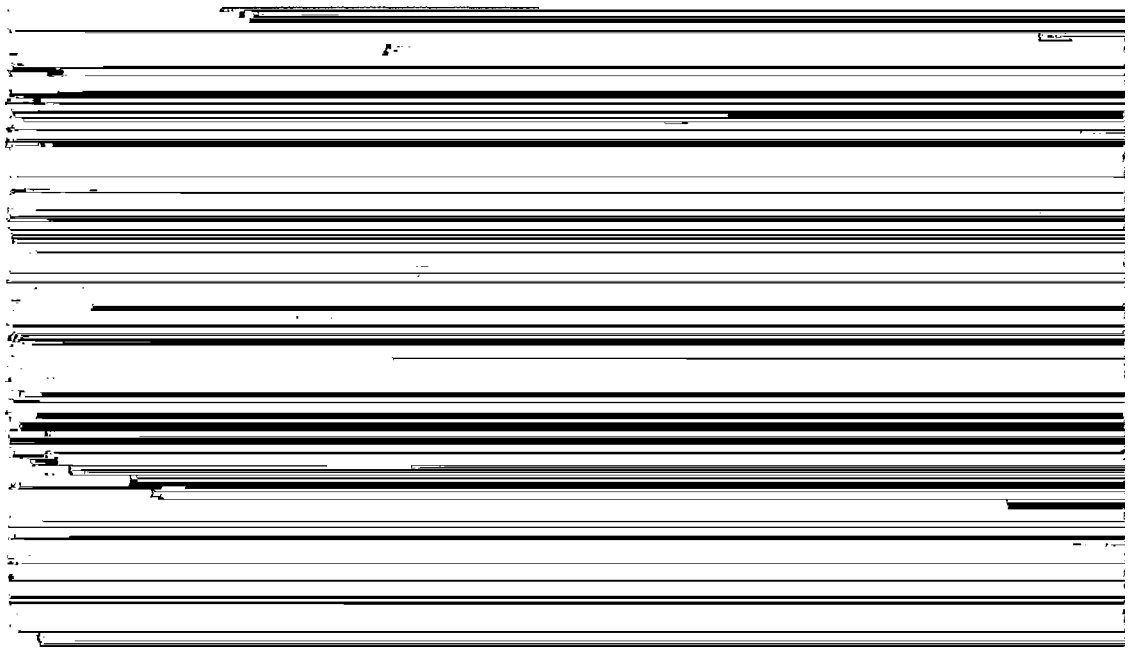

Figure 8-20—Signal reference grid utilizing welded steel wire mesh

Copyright © 2006 IEEE. All rights reserved.

Table 9-28—Highlights of ANSI T1.333 requirements for grounding and bonding conductors

Item	Highlight
Grounding conductors	Sized to withstand without damage any fault current likely to be imposed while facilitating the operation of the overcurrent protective devices employed in the associated circuits.
Size of grounding conductors	A suitable method shall be used to establish the size (cross-sectional area) of grounding conductors.
The minimum size for a DCEG conductor	DCEG conductor for an equipment frame, cabinet, or enclosure shall not be smaller than 6 AWG.
Connectors used with grounding conductors	Listed for their intended purpose by an NRTL. Compression-type, two-hole connectors are preferred for terminating grounding conductors.
Hardware	Installed in accordance with the manufacturer's instructions.
Anti-oxidizing compound	Suitable for electrical connections and properly used on the unplated surface of any conductor, connector, bus bar, or other surface that is part of a grounding path.
Bends in grounding and bonding conductors	Avoid wherever possible. When bends cannot be avoided, the bending angle should be as large as practicable.
Nonmetallic conduits or sleeves	Should be used to protect the grounding and bonding conductors. If local regulations do not permit the use of nonmetallic conduits or sleeves, steel conduits or sleeves not exceeding 1 m (3 ft) length shall be used for penetrating floors or walls.
Metallic conduit longer than 1 m (3 ft)	Bond the grounding conductor(s) to the conduit at both ends of the conduit.
Rings made of nonmagnetic material	Should be used where required for supporting grounding or bonding cables.
Administration	The conductor should be clearly and visibly labeled on both ends unless both ends are clearly visible from each end.

9.9.22 General considerations for grounding and bonding conductors

NEC Article 250 and Chapter 8 should be observed for connecting grounding system components. See also 8.5 and 9.9.18. Grounding and bonding conductor practices are also addressed in the following related standards:

a) ANSI T1.313-2003, for telecommunications central office-type facilities

b) ANSI T1.318, for telecommunications network interface at the customer location

c) ANSI T1.316, for telecommunications network OSP facilities

d) ANSI/TIA/EIA J-STD-607-A, for telecommunications grounding and bonding infrastructure at a commercial building

e) The following considerations generally apply:

   1) Grounding materials should be copper or copper alloy. Where other materials are used in conjunction with copper or copper alloy, care must be exercised in providing for proper bi-metal coupling to reduce corrosion (electrolysis).

   2) Grounding and bonding conductors shall be of sufficient cross-sectional area to safely conduct anticipated ground currents. For example, a specification of 2000 circular mils per running foot for the conductor provides a voltage drop of impressed voltage multiplied by 0.005. For an impressed voltage of 1000 V, the resultant voltage drop (neglecting inductance) would be only 5 V.

Copyright © 2006 IEEE. All rights reserved.

3) Grounding conductors shall minimize voltage drops along their length during lightning and power fault disturbances. Grounding conductors shall be run in a direct manner with no sharp bends or narrow loops.

4) Grounding conductors should not be run in conduit unless they are vulnerable to mechanical damage or conductor support is needed. When conduit is used, it should be nonmetallic. When the use of metallic conduit cannot be avoided, the grounding conductor shall be bonded to each end of the electrically continuous conduit.

5) 5)Where tinned or galvanized ground rods and grounding conductors are used, care should be exercised during installation so that surfaces are not damaged. Damage to the surfaces of these types of grounding elements may increase the potential for deterioration due to corrosion.

6) Keep grounding and bonding conductors as short as possible.

7) Insulate cable shields to prevent undesired grounding. Random contact between shield braid and chassis can result in noise.

8) Cable shields should be grounded.

9) Shields should not be used for signal return, unless the shield is part of a coaxial cable carrying that signal.

10) Avoid use of twisting the ground leads on cables, especially on those carrying signals above 1 MHz.

9.9.23 Grounding considerations for co-location areas

Grounding for co-location areas must be accomplished in accordance with recommendations provided elsewhere in this recommended practice, such as 9.9.6. In no case should the co-location area opt for a grounding medium that is isolated from the building grounding electrode system.

9.9.24 Grounding for work areas with headset users

In communications-intensive operations, personnel may wear voice headsets connected to headset interface equipment in addition to the typical work area devices. At these locations, personnel use a variety of electronic equipment including a headset, headset interface equipment, other electronic equipment such as a computer keyboard and video display terminal (VDT), and the workstation furniture. Frequently, workstations are arranged in clusters consisting of several positions. These positions are typically used at reservation bureaus, telemarketing agencies, and such. See ANSI T1.321-1995 and ANSI/TIA/EIA J-STD-607-A Annex D.

ANSI T1.321-1995 presents measures that are intended to help to control ESD in the network operator-type environment. ANSI T1.321 also presents additional measures that are intended to help minimize the effects of lightning, surges from commercial ac power lines, and power switching operations, both at the facility (building) level and at the network operator-type equipment position. These measures provide for equipotential bonding and grounding at the TEF and the power entrance facility (PEF), as well as for equipotential bonding and grounding, where necessary, and electrical protection at the network operator-type equipment positions. Although ANSI T1.321 deals specifically with telecommunications network locations, the measures outlined in the standard are applicable to non-network installations, as well as at existing installations. See Figure 9-74.

 Copyright © 2006 IEEE. All rights reserved.

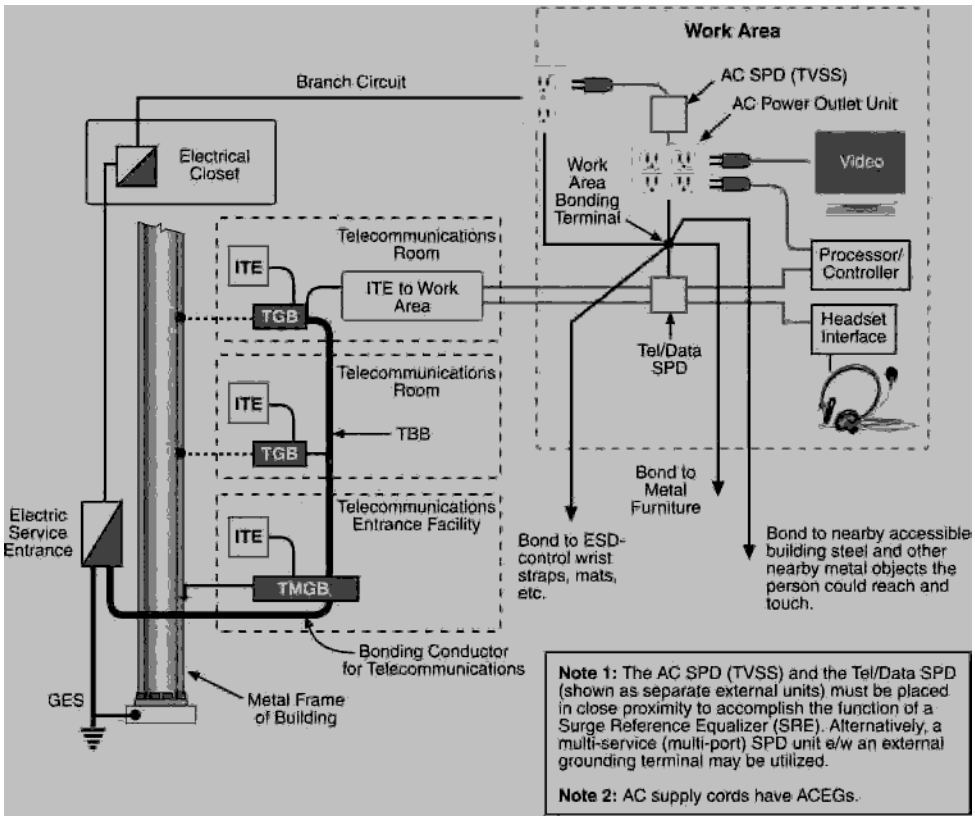

Figure 9-74—Grounding and bonding at a work area where a wire-line headset is used (in accordance with ANSI T1.321)

From Figure 9-74, note the following:

a) The work area protection schema from ANSI T1.321-1995 is overlaid onto the grounding and bonding infrastructure for telecommunications from ANSI/TIA/EIA J-STD-607-A.

b) For grounding and bonding purposes, the position bonding terminal (PBT) is vital.

c) Dielectric design of the wire-line headset is very important and should meet requirements given in Telcordia GR-1089-CORE-2002.

d) Wireless headsets do not contain the wire-line connection to the electrical environment and are a recommended practice. However, wireless headsets may not always be available or suitable for certain operations.

e) The VDT should be MPRII-compliant in order to minimize electrostatic charge buildup on and around the screen.

Note that ANSI T1.321-1995 contains many recommendations and requirements and is considered a recommended practice. The recommended practices in this standard support and are compatible with ANSI T1.321. In several respects, this recommended practice accomplishes many of the objectives described in ANSI T1.321.

9.9.25 Grounding for especially susceptible electronic equipment

For the purpose of reducing objectionable noise on the grounding system, NEC Article 647 permits the use of balanced ac power systems. Balanced ac power remedies a fundamental noise problem created by the grounding design prevalently used in unbalanced ac power systems. See Glasband [B2].

Copyright © 2006 IEEE. All rights reserved.

Figure 9-75 illustrates a restructured ac circuit where the conventional hot-neutral-ground architecture is replaced by a balanced circuit configuration. Reactive currents are balanced at the grounding point. With balanced power, reactive currents null (cancel) at the center tap of the ac transformer, thereby eliminating reactive current in the ground as a source of interference in signal circuits.

Often various media production environments have online capabilities connected to the same audio/video (A/V) system through networking cables. For the A/V environment, ITE should be considered in the same manner as any other electronic load with a switching power supply. In networking applications, an accurately balanced ac voltage (balanced line voltage with respect to ground reference) may decrease the incidence of data and checksum errors, thus increasing throughput. Error rates become reduced when higher frequency harmonics are reduced, which reduces timing errors (digital jitter).

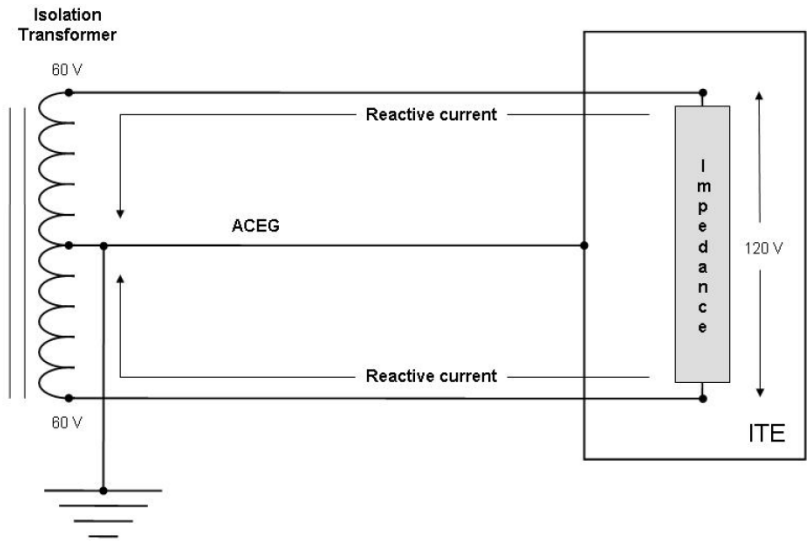

Adapted with permission from EquiTech Corporation.

Figure 9-75—120 V ac balanced power system

9.9.26 Grounding for electromagnetic compatibility

Grounding for EMC for commercial telecommunications is only partially addressed in the following documents:

a) ITU-T K.31

b) ANSI/TIA/EIA J-STD-607-A

c) BICSI TDM Manual [B9].

Historically, EMC for commercial telecommunications was primarily concerned with controlling emissions. Grounding and bonding concerns were generally left to the telecommunications equipment manufacturer to specify as requirements for successful equipment operation. ANSI/TIA/EIA J-STD-607-A partially addressed grounding and bonding for EMC by specifying the required grounding and bonding infrastructure (access to an approved grounding bar) necessary for commercial buildings. BICSI TDM Manual [B9] contains an entire chapter on EMC for telecommunications in a commercial building and is a recommended practice.

An electrostatic management program for large server centers is a recommended practice. Such a program should consist of a facility audit to review design issues that might be related to grounding, ESD/EMI control procedures, staff training, and appropriate ESD control measures.

 Copyright © 2006 IEEE. All rights reserved.

9.9.26.1 EMC grounding compatibility

Some telecommunications digital systems today have high speeds (gigahertz) and large bandwidths. One concern is that transient currents caused by lightning or surge currents on a serving dc power distribution circuit may enter the system through the backplane, upsetting system performance and possibly damaging components. The bus currents and isolation parasitic capacitance that are represented by the 48 V dc side of the system create much greater threat levels to the backplane of these systems, since embedded communication buses are distributed through the backplanes. Capacitors used to isolate the dc common paths can be inadequate at RF outside the backplane structure. To mitigate these effects for ITE deployed in an RAA, manufacturers sometimes choose to bond the 48 V dc return to chassis (dc-C configuration). Note that this dc-C configuration may not be directly compatible with the equipment bonding topology already deployed within the RAA, such as a dc-I IBN. In this situation, the dc-C equipment must be installed in such a manner as to not violate the existing equipment bonding topology.

9.9.26.2 Grounding for network electromagnetic compatibility

Grounding for EMC for public network telecommunications is significantly addressed in the following documents:

a) ITU-T K.27-1996

b) Telcordia GR-1089-CORE-2002

c) ANSI T1.333-2001

These documents contain mandatory and optional requirements considered necessary for the high availability required for public networks by regulatory agencies. These documents are also useful for application to commercial installations requiring high availability.

9.9.26.3 Grounding for network electromagnetic compatibility via the CBN

The coupling of surges into indoor signal or power cabling is reduced, in general, by running the cables in close proximity to CBN elements. However, in the case of external surge sources, the currents in the CBN will tend to be greater in peripheral CBN conductors. This is especially true of lightning down-conductors. Therefore, it is best to avoid routing cables in the periphery of the building. When this is unavoidable, metallic ducts that fully enclose the cables may be needed. In general, the shielding effect of cable trays is especially useful, and metallic ducts or conduits that fully enclose the cables provide nearly perfect shielding.

In steel frame high-rise buildings, the shielding effects that the steel frame provides against lightning strikes can help. For cables extending between floors, maximum shielding is obtained by locating the cables near the center of the building. However, as previously stated, cables enclosed in metallic ducts may be located anywhere.

9.9.26.4 Signal cabling considerations

There are instances where shielded cabling systems fail due to high-frequency noise coupled directly through the grounded connections between interconnected electronic equipment. Isolating the ground connection at one end of the circuit may serve to reduce the noise current flowing through the ground return path. However, such an indication does not mean the ground connection should be left open. Safety and other performance considerations may dictate that the ground connection is left intact and mitigation is accomplished in another acceptable manner.

Shielded cable systems can be effective in maintaining the EMC performance of the distributed equipment and can show better results than unshielded, where all other considerations are met. Such considerations

Copyright © 2006 IEEE. All rights reserved.

include ground loop noise and all grounding and bonding problems involved in ensuring shield continuity throughout the system.

A well-balanced twisted pair cabling system (with tightly twisted pairs) generates very low emissions and provides high noise immunity. Adding a shield may not significantly improve matters (other than reducing capacitive coupled interference) and may cause other problems.

If poor shielding does allow RF currents to flow on the outside of the chassis, a ground wire will not cure the condition. Internally, chassis grounding is used to help keep RF contained within the appropriate circuits. Missing or resistive internal ground connections can sometimes permit the RF energy to appear where it is not supposed to be; perhaps in an unshielded circuit that normally would not radiate RF. Part of the internal considerations should also be to ensure that the chassis grounding is functioning as the manufacturer designed it.

9.9.26.5 Pathway separation between telecommunications and electrical cables

Recommended practice is as follows:

a) Pathway separation is maximized where possible.

b) Power circuit conductors should be maintained close together to minimize interference.

c) Raceways used to house telecommunications cabling should be metallic, fully enclosed, and grounded.

9.9.26.6 Noise coupling into cabling

The induced common-mode coupling voltage (V_{cm}) is a function of the electric field strength and the loop area formed by a conductor of given length that is suspended at an average height above the ground plane.

Installing the signal cable near a ground plane can significantly reduce the magnitude of induced common-mode noise coupling. Changing the average height from 1 m to 0.1 m (3 ft to 0.3 ft) is equivalent to reducing the field intensity from 3 V/m to 0.3 V/m, if the height were constant.

9.9.26.7 Unshielded twisted pair (UTP) cabling balance

The concept of balanced twisted pairs and the calculation of the induced noise assume a well-balanced cabling link. In practice, cables and connecting hardware exhibit a finite unbalance in capacitance, resistance, and inductance between each conductor and the ground return path. Depending on the degree of unbalance, a part of the common-mode noise signal is converted to a differential-mode noise signal that passes directly to the input of the receiver.

9.9.26.8 Screened twisted pair (ScTP) shield effectiveness and ground loop noise

Many of the same considerations that apply to UTP cables concerning noise coupling also apply to ScTP cables. There are two main differences, as follows:

a) The effectiveness of the cable shield to reduce external noise

b) How the cables shield is terminated at the equipment

9.9.26.9 Coaxial cabling

Coaxial cabling readily provides a path to promote ground loops since its outer shield is normally grounded. With the growing use of broadband services for multimedia, coax-grounded shields are likely to be involved in detection of unwanted “ground loops” that cause hum bars on video displays. Recommended practice is to

 Copyright © 2006 IEEE. All rights reserved.

provide fiber links or otherwise safely decouple the effects of the coax shield continuity between interconnected electronic equipment.

9.9.26.10 Minimize length and area of high-frequency current loops

In addition to the possibility of ground loops, the load connections from a power supply are, in effect, high-frequency current loops. Keeping these connections short and tightly coupled will minimize the radiating effect of these loops.

9.9.26.11 Minimize coupling of high-frequency circuits to potential external radiators

AC power input wiring can be viewed as an antenna. Any high-frequency signals coupled to it within the apparatus enclosure will be radiated outside the apparatus enclosure. Recommended practice is to keep the ac power input wiring physically isolated from any circuits carrying high-frequency signals, including load connections from the power supply.

9.9.26.12 Design for EMC

The enclosures, data cable partitions, and power cable troughs should be constructed of grounded conductive metal components. Utilizing these components ensures that radiated EMI will not pass between enclosures and interfere with adjacent equipment or conductor raceways. Data partitions and power cable troughs should be grounded along with other conductive metal components.

Multibranch whips used to distribute power should be constructed of twisted-conductor flexible cord. This cable design provides cancellation of the magnetic fields being produced by the conductors. All cable terminations should be locking type to provide a tight connection and eliminate arching, which can also cause EMI emissions.

9.9.27 Grounding and bonding of outside plant facilities

See 9.9.3.

9.9.27.1 Network vs. station ground

Ideally, the telecommunications system would have each NI ground at the same potential as the central office ground. This is rarely possible due to the predominance of non-homogenous earth. Typically, common bonding and grounding with multigrounded neutral ac power systems is required. This allows the central office and station grounds to use the power grounds spaced throughout the power grid.

However, sometimes the telecommunications utility cable is placed on the opposite side of a road from the power company lines, leaving the connections from cable shields to the power ground occurring only at the customer's location and at the central office. The result is potentially large fault currents going toward the customer's premises or toward the central office grounding system without the reducing effect of the grounding of the ac power grid.

9.9.27.2 Network or station ground effect on lightning dissipation

Consider a telecommunications OSP located where (due to soil conditions) ground resistance at a 2.5 m (8 ft) depth is 225 ohms. Acceptable ground resistance value is available at a depth of 29 m (96 ft), but bedrock is at 7 m (22 ft). Adding to the problem, the power company uses a delta system. So grounding to the power system causes unacceptable transmission quality. Power influence at best is marginal, and it is prohibitively expensive to decrease the problem. The area has a high incidence of lightning. Due to sufficient grounding practices, telecommunications circuits in the area seem to offer the best path to earth. The copper in service drops from cables, and sometimes even the copper in cables themselves, is found

Copyright © 2006 IEEE. All rights reserved.

completely vaporized by lightning. Without mitigation involving better grounding of the OSP, this problem will not be resolved.

In contrast, consider a location with a higher incidence of lightning but with ground resistance at a 2.5 m (8 ft) depth of 2 ohms. Lightning finds a good path to earth along the shield and not through the telecommunications utility cable pairs. Adequate grounding in both the cable and at the telecommunications protector drastically reduces the customer service interruptions and damage to telecommunications equipment due to lightning.

In both cited areas, adequate bonding is essential. The higher currents produced by lightning through a resistive bond can produce arcing conditions that damage pairs—no matter how good the ground is.

9.9.28 Grounding outside plant to mitigate ac induction

Grounding and bonding is essential for reducing the effects of induced ac on OSP. Burying cable does not protect it from induced ac since the earth is conductive to power system ground return current. Cable shields should be continuous (bonded) and strategically grounded. See ANSI T1.316.

DC on a cable shield contributes to corrosion and may require "isolation gaps" to minimize the negative effects of the dc current. Cables may require isolation gaps bypassed with capacitors to restore the path to ground for the unwanted ac that is a result of the exposure. Capacitors ranging from 1000 uF to 10 000 uF are typically used. See ANSI T1.318.

Noise can also be caused by wet cables (very typical if they are the air core type), missing or inappropriate bonds and grounds, or other interfering sources. Most of the time it is annoying noise, but it can become more severe and cause equipment malfunctions.

9.9.29 Grounding of metallic links between buildings

See 9.9.3 and the NEC.

9.9.30 Grounding of satellite dish systems

See the NEC.

9.9.31 Grounding of tower structures and dedicated radio base station buildings

See ANSI T1.334 and ITU-T K.56-2003.

9.9.32 Grounding of radio base stations electronic equipment

See ANSI T1.334 and ITU-T K.56-2003.

9.9.33 Grounding of telecommunications waveguide, coaxial cable, and SPDs

Radio frequency waveguide and coaxial protectors are often used where a radio tower system connects into the building via coaxial cables. The primary concern for protection is lightning flowing in the tower and becoming induced into the waveguide and coaxial cables alongside the tower structure. The primary protection intent is to capture and drain the incoming lightning currents to earth (ground) exterior to the building. If successful, the remnant voltage impressed internal to the building can be safely handled without operations impairment to the electronic equipment. An impending concern is the impact of the GPR generated by lightning currents at the tower structure and the entry point into the building of the waveguide and coaxial cable.

 Copyright © 2006 IEEE. All rights reserved.

See ANSI T1.334, ANSI/TIA/EIA J-STD-607A, and ITU-T K.56-2003.

9.10 Evaluations and audits

Powering, grounding, and electrical protection systems are necessarily a dynamic environment and subject to change and deterioration. Therefore, recommended practice is to maintain sufficient control over these vital systems by performing scheduled evaluations and audits at the location. An evaluation is considered an audit enhanced with opinions on the findings and a listing of vital recommendations. An audit can be considered a gathering of information based upon following guidelines from an audit procedure or checklist. Generally, the audit procedure and checklist are prepared by a subject matter expert and oriented toward a pass/fail decision. The power and grounding audits can not always be ready made with a list of items to just check off. The audit must be customized per building infrastructure area to be audited.

9.10.1 Qualifications for conducting evaluations and audits

Recommended practice is for persons conducting an evaluation or audit to be industry-recognized subject matter experts. Care should be exercised in selecting a person to perform an evaluation or audit. Note that certain certificates or documents may not necessarily endorse a person as a subject matter expert. Generally, references and client history are helpful in the selection process. Persons performing the audit may not be subject matter experts but can still gather useful information with sufficient training. However, subject matter experts have distinct advantages when performing the evaluation or audit. These advantages are important in maintaining accuracy, efficiency, and depth of the evaluation or audit. These advantages include the following:

a) A working knowledge of applicable codes, standards, practices, and methods
b) Possibly, a recognized contributor on the subject matter to recognized standards-making organizations
c) Education and experiences from a variety of previous evaluations and audits
d) A professional and dedicated approach (livelihood), including safety
e) A working knowledge of test and measuring equipment available for such purposes
f) Functional knowledge of powering, grounding, and electrical protection that allows new situations to be handled correctly
g) The ability to recognize hazardous situations that require immediate attention
h) The ability to recognize performance issues that need immediate attention
i) The ability to effectively communicate and instruct on the subject matter to the customer or support persons
j) Access to a network of colleagues for advice and second opinion
k) Ability to tailor the evaluation or audit to specific interests

9.10.2 Scheduling of evaluations and audits

Evaluations and audits should be performed on a schedule that economically supports the enterprise. For critical installations, audits should be factored into the scheduled operations projects as a necessary installation and maintenance task. For noncritical installations, evaluations and audits should be performed before and after the installation to ensure a proper installation and environment. In smaller noncritical installations an evaluation or audit is not economically justifiable unless severe safety or performance issues are encountered. The following guidelines should be considered:

a) A power and grounding audit should be completed prior to any additional building infrastructure power equipment, equipment frames, or grounding conductors are moved, added, or changed. This will establish benchmarks of the power and grounding systems.

Copyright © 2006 IEEE. All rights reserved.

b) A power and grounding audit should be completed upon completion of any additional building infrastructure power equipment, equipment frames, or grounding conductors being moved, added, or changed. This will validate the power and grounding systems.

c) Power and grounding audits should be preformed at a maximum of 2-year intervals when no building infrastructure power equipment, equipment frames, or grounding conductors' moves, additions, or changes have taken place. This will account for systems deterioration.

9.10.3 Site power quality survey

For site surveys, the procedures described in Chapter 6 are applicable to this chapter as well.

9.10.4 Telecommunications powering, grounding, and protection evaluation or audit

The telecommunications powering, grounding, and protection evaluation or audit includes items such as the following:

a) The grounding and bonding infrastructure as described in ANSI/TIA/EIA J-STD-607-A
b) Approved grounds as described in 9.9
c) Telecommunications protectors as described in 9.8.5.8
d) SREs (part of a SPD) as described in 8.6.7
e) Ac power systems, including backup power
f) SPD
g) DC power systems, including battery systems
h) DC powered equipment bonding networks
i) Mapping of currents on grounding conductors (see Chapter 4)
j) Monitoring devices for currents on grounding conductors
k) Towers and antennae
l) CO-OSP
m) RAAs
n) Radio equipment
o) Satellite dish systems
p) CATV systems
q) Potential application of ANSI T1.313-2003 and ANSI T1.321-1995

9.10.5 Power interruption testing

Such testing is already established at some TSP facilities. Power interruption testing for critical commercial and industrial locations is more complex due to multi-tenants, third party ownership and possible production start-up issues. In some situations, the complexities may be too overwhelming (including competing interests) to perform total building power interruption testing. Interested tenants and owners should perform as many of the tests and procedures as feasible for their portion of the location (which may include an RAA). Where performed, power interruption testing should be scheduled every two years, alternating between peak summer and peak winter conditions. The building power interruption test is proven to help ensure that

a) All necessary building ac loads are on the appropriate standby generator's bus.
b) The appropriate standby generator is properly sized for the building or load.
c) The standby generator's "life support" systems (fuel transfer pumps, oil cooler pumps, start battery chargers, etc.) are powered from the generator they are serving.
d) Test conditions occur during periods of peak demand and/or worst environmental conditions.
e) The building power interruption test also ensures that

 Copyright © 2006 IEEE. All rights reserved.

1) Critical building facilities and alarm surveillance systems are powered from the appropriate standby generator.
2) The building's emergency lighting is working properly.
3) Automatic transfer switchgear is operating properly.
4) Critical meeting facilities (war rooms), building security systems (card access readers, video surveillance, etc.), and communications facilities are powered from the appropriate standby generator.
5) Routine preventative maintenance on battery plants, standby generators, and automatic transfer switchgear.
6) Routine audits of the office's power, grounding, and environmental systems-including infrared scans of ac and dc circuits and components.
7) Mobile generators: purchase or lease and maintain an accurate inventory (capacity, voltage, location, etc.).
8) Fuel delivery agreements/contracts.
9) Qualified turbine and/or diesel engine mechanics on-call.

9.11 Normative references

The following referenced documents are indispensable for the application of this recommended practice. For dated references, only the edition cited applies. For undated references, the latest edition of the referenced document (including any amendments or corrigenda) applies.

Accredited Standards Committee C2-2002, National Electrical Safety Code® (NESC®).[4]

ANSI/TIA/EIA J-STD-607-A, Commercial Building Grounding (Earthing) and Bonding Requirements for Telecommunications.[5]

ANSI T1.311, DC Power Systems—Telecommunications Environment Protection.

ANSI T1.316, Electrical Protection of Telecommunications Outside Plant.

ANSI T1.318, Electrical Protection Applied to Telecommunications Network Plant at Entrances to Customer Structures or Buildings.

ANSI T1.334, Electrical Protection of Communications Towers and Associated Structures.

ANSI T1.338, Electrical Coordination of Primary and Secondary Surge Protection for Use in Telecommunications Circuits.

IEEE Std 141, IEEE Recommended Practice for Electric Power Distribution for Industrial Plants *(IEEE Red Book)*.[6, 7]

---

[4]The NESC is available from the Institute of Electrical and Electronics Engineers, Inc., 445 Hoes Lane, Piscataway, NJ 08854, USA (http://standards.ieee.org/).

[5]ANSI publications are available from the Sales Department, American National Standards Institute, 25 West 43rd Street, 4th Floor, New York, NY 10036, USA (http://www.ansi.org/).

[6]IEEE publications are available from the Institute of Electrical and Electronics Engineers, Inc., 445 Hoes Lane, Piscataway, NJ 08854, USA (http://standards.ieee.org/).

[7]The IEEE standards or products referred to in this subclause are trademarks of the Institute of Electrical and Electronics Engineers, Inc.

Copyright © 2006 IEEE. All rights reserved.

IEEE Std 142, IEEE Recommended Practice for Grounding of Industrial and Commercial Power Systems *(IEEE Green Book)*.

IEEE Std 241, IEEE Recommended Practice for Electric Power Systems in Commercial Buildings *(IEEE Gray Book)*.

IEEE Std 446, IEEE Recommended Practice for Emergency and Standby Power Systems for Industrial and Commercial Applications *(IEEE Orange Book)*.

ITU-T K.31, Bonding Configurations and Earthing of Telecommunication Installations Inside a Subscriber's Building.[8]

NFPA 70, 2005 Edition, National Electrical Code® (NEC®).[9]

NFPA 70B, Recommended Practice for Electrical Equipment Maintenance.[10]

NFPA 75, Standard for the Protection of Electronic Computer/Data Processing Equipment.

NFPA 780, Standard for the Installation of Lightning Protection Systems.

TIA/EIA 606-A, Administration Standard for Commercial Telecommunications Infrastructure.[11]

TIA/EIA 758-A, Customer-Owned Outside Plant Telecommunications Infrastructure Standard.

TIA PN-3-3283-RV2, Environmental Considerations for Telecommunications Terminals (to become TIA 571-B-2006).

9.12 Bibliography

[B1] *Customer-Owned Outside Plant Design Manual* (CO-OSP Design Manual), 3rd edition, Building Industry Consulting Services Int'l, Tampa, FL, 2003, 2004.

[B2] Glasband, M., "The Origin of Balanced Power," *Sound and Video Contractor Magazine,* Sept. 1997, Intertec Publishing Company.

[B3] "IEEE 802.3af Power Over Ethernet: A Radical New Technology," July 29, 2003, at www.poweroverethernet.com.

[B4] IEEE Std 802.3af-2003, IEEE Standard for Information Technology—Part 3: Carrier Sense Multiple Access with Collision Detection (CSMA/CD) Access Method and Physical Layer Specifications Amendment: Data Terminal Equipment (DTE) Power via Media Dependent Interface (MDI).

[8]ITU-T publications are available from the International Telecommunications Union, Place des Nations, CH-1211, Geneva 20, Switzerland/Suisse (http://www.itu.int/).

[9]The NEC is published by the National Fire Protection Association, Batterymarch Park, Quincy, MA 02269, USA (http://www.nfpa.org). Copies are also available from the Institute of Electrical and Electronics Engineers, Inc., 445 Hoes Lane, Piscataway, NJ 08854, USA (http://standards.ieee.org/).

[10]NFPA publications are available from Publications Sales, National Fire Protection Association, 1 Batterymarch Park, P.O. Box 9101, Quincy, MA 02269-9101, USA (http://www.nfpa.org/).

[11]TIA/EIA publications are available from Global Engineering Documents, 15 Inverness Way East, Englewood, CO 80112, USA (http://global.ihs.com/).

 Copyright © 2006 IEEE. All rights reserved.

[B5] IEEE PC62.72 (Draft 1, 1 November 2005), Draft Guide for the Application of Surge Protective Devices for Low-Voltage (1000 V or Less) AC Power Circuits.[12]

[B6] Liebert Corporation, "High-Availability Power Systems, Part III: AC Distribution Options," White Paper, July 2001.

[B7] Maytum, M. J., "Telecom Circuit Protection Trends," Power Innovations Limited, *Passive Component Industry,* January/February 2001, vol. 3, no. 1.

[B8] Mollet, R., Law, D., Scoggin, H., "Understanding Short Circuit Currents in DC Power Systems When Used In Conjunction With Standby Batteries," *IEEE Intelec 2002,* Sept./Oct. 2002.

[B9] *Telecommunications Distribution Methods Manual* (TDM Manual), 10th edition, Building Industry Consulting Services Int'l, Tampa, FL, 2003, 2003.

[12]This IEEE standards project was not approved by the IEEE-SA Standards Board at the time this publication went to press. For information about obtaining a draft, contact the IEEE.

Copyright © 2006 IEEE. All rights reserved.

Annex 9A

(normative)

General

9A.1 Purpose

The primary purpose of Chapter 9 is to apply the fundamentals established in Chapter 4 of this recommended practice to telecommunications-type electronic equipment. (For more information on descriptions of telecommunications-type electronic equipment, see Annex 9B.) Secondary purposes include the following:

— Encompass the entire complex for a given commercial or industrial location. This complex may include separate buildings and RAAs within buildings.

— Recognize practices from presently used telecommunications industry-accepted codes, standards, practices, and methods. See Table 9-1 for a listing of example documents used in the North American commercial and industrial building market. Note that some needed documents do not exist and that some TSP documents may be useful.

— Provide for any necessary deviation to other recommended practices in other chapters of this recommended practice or in other referenced documents.

— Establish recommended practices where none exist but are necessary.

— Provide sufficient background and commentary to support a working understanding of the recommended practices.

— Provide a document useful as a cross-industry reference by interested parties from all the different markets involved in the commercial or industrial location.

— Promote harmonization with global standards, such as the ITU-T series documents. Harmonization includes terms and descriptions.

NOTE—For context, clarity, and continuity, there is some overlap of similar information contained in other chapters of this recommended practice.

Table 9A-1 illustrates that many documents are utilized (at least in part) to provide presently used industry requirements and recommendations. BICSI documents are intended to provide suitable methods to implement telecommunications requirements and recommendations for the commercial building sector. *Although much information exists in these many documents, no single document directly intended for the commercial and industrial location provides the necessary panorama of coverage to ensure adequate powering, grounding, and electrical protection of telecommunications-type electronic equipment*.

 Copyright © 2006 IEEE. All rights reserved.

Table 9A-1—Example industry documents with information on areas of interest

Area of interest	Example North American industry document(s)
Lightning protection system (LPS)	NFPA 780
Ac power systems	NEC IEEE Std 241 *(IEEE Gray Book)* IEEE Std 141 *(IEEE Red Book)* IEEE Std 446 *(IEEE Orange Book)*
Grounding electrode system (GES)	NEC IEEE Std 142 *(IEEE Green Book)*
TSP network interface (NI) grounding and protection	NEC ANSI T1.318
Grounding and bonding infrastructure for telecommunications	ANSI/TIA/EIA J-STD-607-A (commercial only) BICSI TDM Manual [B9] (commercial only) IEEE Std 241 *(IEEE Gray Book)* IEEE Std 141 *(IEEE Red Book)* IEEE Std 142 *(IEEE Green Book)*
Inter-building telecommunications cabling	NEC ANSI T1.316 BICSI CO-OSP Design Manual [B1]
Tower structures grounding	ANSI/TIA/EIA J-STD-607-A (ANSI T1.334 applies to TSP facilities)
Surge protective devices (SPDs)	IEEE C62 series NFPA 780 NEC (Telcordia GR-974-CORE-2002 applies to TSP)
Telecommunications equipment bonding networks (CBN/IBN)	No specific document exists. (ANSI T1.333-2001, Telcordia GR-1089-CORE-2002, and Telcordia GR-295-CORE-2004 apply to TSP facilities)
Work areas with headset user protection	ANSI/TIA/EIA J-STD-607-A BICSI TDM Manual [B9] (ANSI T1.321-1995 applies to TSP facilities)
Electrical protection for telecommunications at commercial and industrial locations	No specific document exists. Safety coverage in NEC (ANSI T1.313-2003 applies to TSP facilities)
DC power systems	NEC BICSI TDM Manual [B9] (ANSI T1.311 and ANSI T1.315-2001 apply to TSP facilities)
Electrostatic discharge (ESD)	The EOS/ESD Association (various documents) (ANSI T1.308-1996 and Telcordia GR-1089-CORE-2002 apply to TSP facilities)
Safety	NEC UL 60950-2000 (UL 1950-1995 and UL 1459-1995 for some legacy equipment)
Administration	TIA/EIA 606-A
Connection to the public telecommunications network	TIA 968-A-2002

Copyright © 2006 IEEE. All rights reserved.

9A.2 Objectives

The objectives of Chapter 9 are to provide for the following:

a) Safety awareness of electrical hazards associated with equipment grounded at distributed locations or within different bonding (and grounding) topologies.

b) A "systems" overview of recommended practices.

c) Ease of implementation of recommended practices, resulting in practical, cost-effective installations.

d) Deference to other industry standards, practices, design methods, and procedures, where appropriate and considered adequate.

e) A resource listing of relevant industry codes, standards, and practices (Annex 9A).

f) Descriptions of the environmental exposure and the vulnerability of telecommunications systems and equipment to electrical and electromagnetic disturbances.

g) Stable and acceptable operation of telecommunications systems and equipment(s).

h) Reduction (to an acceptable level) of voltage differences developed between telecommunications metallic frames, cabinets, enclosures, equipment, and nearby metallic structures.

i) Defined fault current paths (both ac and dc) of adequate current-carrying and fault-clearing capability.

j) Reduction of electrical noise and improved EMC.

k) Reliable and effective grounding and bonding connections over the expected life of the equipment.

l) Description of powering and grounding problems consistently encountered at commercial and industrial locations.

m) General guidelines for auditing the power and grounding of telecommunications.

9A.3 Interrelated factors affecting powering, grounding, and protection

Powering, grounding, and protecting telecommunications-type electronic equipment addressed in this chapter involves many interrelated factors such as those listed in Table 9A-2.

Generally, equipment used in the commercial environment must meet applicable regulatory codes and standards (FCC, NEC, UL, etc.) that are concerned with issues similar to those described in Telcordia GR-1089-CORE-2002. As explained in GR-1089, depending on the application and location, telecommunications equipment may be exposed to one or several sources of electromagnetic energy. It is obviously important to avoid equipment damage and malfunction during these exposure conditions. Exposure conditions include lightning, 60 Hz commercial power fault conditions, ESD, EFTs, EMI, operation in the presence of a dc potential difference, and operation in a steady-state induced voltage environment. Other concerns include equipment fire or electrical safety hazard in the presence of severe lightning or 60 Hz commercial power fault conditions, safe voltage levels for intentionally applied sources, electrochemical corrosion effects, and grounding/bonding. For equipment used in the (regulated) public telecommunications network, Telcordia GR-1089-CORE-2002 is extensively applied based on Network Equipment Building System (NEBS) levels of application. These NEBS levels are recommended for consideration in specifying equipment used in nonregulated (commercial) environments—especially where robustness is a critical concern.

 Copyright © 2006 IEEE. All rights reserved.

Table 9A-2—Interrelated factors on powering, grounding, and protecting telecommunications

Item	Interrelated factors
1.	Selection of a suitable installation location and space environment, including cooling for high-density equipment racks and cabinets.
2.	Specifications for inherent or external powering and protection devices.
3.	Provisioning of proper grounding and bonding topologies and apparatus.
4.	Adherence to suitable wiring methods.
5.	Ensuring EMC.
6.	Recognition and mitigation of environmental electrical exposure situations.
7.	Adherence to interface requirements for a declared zone (area).
8.	Design for testability and suitable maintenance of common-use items such as the grounding electrode system and the grounding and bonding infrastructure for telecommunications.
9.	Standardized administration of the powering, grounding, and electrical protection systems. All interested parties should be able to locate components and understand the intended identifications and markings.

It should also be recognized that electrical service in a conditioned-power world is a parallel to telephone service in a high-speed digital world. The electrical system should fully support voice/data/video (VDV) in coordinated fashion because VDV is now on par with the "big three" of building systems: mechanical, electrical, and HVAC. Because these systems are necessarily interconnected and rely to a great degree on electronics, they will not function optimally—and may not function at all—with an inadequate electrical system susceptible to electrical disturbances.

These various telecommunications and power systems may also comprise a typical building function. Included are networks, telecommunications riser, fire-alarm riser, security riser, building management system riser, closed-circuit TV riser, satellite TV riser, power riser, and telecommunications grounding riser. Note that these various systems interconnect—and interdepend. For example, the fire-alarm control panel connects to the main ac power, the public telecommunications system, elevator controls, door controls, and other systems.

9A.4 Trends and changing responsibilities

Ten trends (among others) are readily identifiable that impact powering, grounding, and electrical protection of telecommunications-type equipment. These trends are listed in Table 9A-3.

For discussion on these trends and changing responsibilities, see Annex 9D.

Copyright © 2006 IEEE. All rights reserved.

Table 9A-3—Listing of trends and changing responsibilities

Item	Trends and changing responsibilities
1.	Increasing IT department involvement with the facility management department.
2.	The emergence of "pre-engineered" integrated solutions for room-scale protection.
3.	The gradual abandonment of the raised floor concept for IT equipment.
4.	The impact of technology convergence on segregated service locations and the emergence of co-locators.
5.	The impact of technology convergence on product deployment.
6.	The convergence of wire-line and wireless operations in the same location.
7.	The effect of network transformation on dc power distribution for dc powered telecommunications-type equipment.
8.	Advancements in power technology to meet the challenges of distributed systems.
9.	The utilization of an adaptable rack enclosure power system able to be switched from ac to dc without any additional engineering.
10.	The integration of ac input power transfer and protection components into a single enclosed unit.

9A.5 Necessity of coordinated design, application, and testing

Generally, the more interconnected and interdependent the network, the more vulnerable it is to problems related to power, grounding, and electrical protection. In the modern workplace, the IT industry has transformed from total protection of one equipment room to minimal protection for distributed networks and out-of-the-way PCs. Today's highly distributed computing and telecommunications environment yields a multitude of different system needs and configurations. In a distributed computing environment (be it a client/server, peer-to-peer, or other network topology), the network and all the devices attached to it become one large virtual mainframe. Typical devices include adapters, bridges, routers and hubs, modems and mail servers, workstations, desktop computers, and factory controllers. It is important to protect all the electrically active devices on the network (the virtual mainframe computer). A well-devised power and protection solution fits the topology of the network.

A coordinated plan is therefore necessary to properly address system-level powering, grounding, and protection requirements. Coordinated design and application includes considerations such as those listed in Table 9A-4.

 Copyright © 2006 IEEE. All rights reserved.

Table 9A-4—Considerations for coordinated design, application, and testing

Item	Consideration	Description
1.	Source voltage stability	Maintaining suitable voltage at the electronic equipment. See also Chapter 8.
2.	Selective coordination	The proper localization of a fault condition to restrict outages to the equipment affected, accomplished by the choice of selective fault-protective devices. This applies to both ac and dc power systems.
3.	Separation from disturbances	Keeping equipment that causes electrical disturbances (motors, printers, and copiers) electrically separated from electronic equipment susceptible to electrical disturbances (such as computers). See also Chapter 8.
4.	Power conditioning	Manipulating the source voltage to be acceptable to the electronic load equipment. See also Chapter 8.
5.	Grounding electrodes (system)	Provisioning a facility grounding system that, within practicality, will keep the buildup of voltages on grounding (to earth) conductors to an acceptable value. See also 9.9.
6.	Intersystem bonding	Intersystem connecting of a facility's different grounding systems to keep the buildup of voltages on bonding and grounding conductors to an acceptable value. For example, all utility service provider systems entering the building must be adequately interbonded to minimize voltage differences between the different grounds of the different systems. See also 9.9.
7.	Grounding and bonding infrastructure for telecommunications	Placement of an engineered, dedicated, and administered infrastructure to support a multivendor and multitenant environment. See also 9.9.
8.	Surge protection	Properly selecting, coordinating, and installing SPDs for the anticipated power system and telecommunications environments and applications. See also 9.8.5.
9.	Adherence to the selected equipment bonding topology	Declaration of intended equipment bonding (and grounding) topology for the selected electronic equipment or power circuit. Examples include the ac IGR circuit, the IBN, and the CBN. See also 9.9.
10.	Integrity of restricted access area (RAA)	Establishing and maintaining rules-of-interface for certain RAAs within a building. For example, an RAA by a TSP should not compromise (or be compromised by) the owner or other tenants within the building. The TSP and building owner should develop mutually acceptable guidelines that detail the rules-of-interface for that RAA and the rest of the building. The rules-of-interface should cover powering, grounding, protection, and other necessary interface items.
11.	Verifiability and fault isolation	Establishing layout and installation criteria to support site power quality surveys, telecommunications-type grounding and protection evaluations, and ready isolation/remediation of faulted apparatus and equipment. For example, some telecommunications-type equipment may be suitable for arrangement into a star or SPG topology that readily supports automatic continuous monitoring equipment or manual measurement for undesirable currents on critical grounding and bonding conductors.

Copyright © 2006 IEEE. All rights reserved.

Table 9A-4—Considerations for coordinated design, application, and testing *(continued)*

Item	Consideration	Description
12.	Administration and utilization	Establishing administration procedures whereby all ac and dc power systems and circuits, grounding bars, grounding and bonding conductors, IBNs, telecommunications-type circuits, RAAs, color-coded receptacles, and other appropriate items are properly identified and marked for intended usage. It is important that identifications and markings be placed at each end of a circuit. It is important that the chosen color for color-coded receptacles (for certain specific use applications, such as UPS) not conflict with established industry usage such as "orange" for the NEC described IGR circuit.
13.	Power interruption testing	Considering design applications to accommodate a total building power interruption test whereby all critical building infrastructures are laid bare to the impact of an interruption.

9A.6 Integrated power protection

Problems adversely affecting a network can come in many forms—from heat and dust to persons and vibration—even if the power source is perfect. The integrated solution combines precision environmental control, UPS, access security, SNMP communications, and cable management into a sealed enclosure. The best situations for considering an integrated power protection solution include the following:

a) Mission-critical or 24-hour servers and communication hubs
b) Factory automated hardware that must be adjacent to the equipment it controls
c) Servers and other equipment vulnerable to physical intrusion
d) Sophisticated, susceptible equipment that must be used in ordinary office environments

9A.7 Facility-wide floor-by-floor power protection

Many facilities require a network to be an integral component of everyday productivity. Some UPS designs offer a space-saving configuration with flexibility to fit into different office environments on a floor-by-floor basis. The most effective scenarios for this kind of comprehensive protection include the following:

a) Facilities under construction or extensive renovations
b) Networks likely to expand dramatically over a relatively short period of time
c) Facilities prone to significant, instantaneous changes in power demands (e.g., a combined office-factory)
d) Energy conservation "zones" where reduced electric bills will yield significant dividends

9A.8 Restricted access area

An RAA may be intentionally designed for increased robustness to the rest of the building. The level of robustness is undefined but is not total due to safety requirements (among other things) for grounded ac and dc power systems and SPDs, etc. Considerations for increased robustness are challenging and include the following:

a) Grounding and bonding: only one grounding electrode system per building.
b) SPDs: coordination, cascade, and grounding issues.
c) AC and dc power systems: separately derived systems and backup power.

 Copyright © 2006 IEEE. All rights reserved.

d) Support systems: Are support systems built into the equipment assembly?

e) Telecommunications-type links: Isolation of grounded metallic links?

f) Other

9A.8.1 Advantages of a restricted access area

The advantages of implementing an RAA with increased robustness include the following:

a) Suitability to micro-manage the power, grounding, and electrical protection issues within the RAA

b) Reduced influences from electrical anomalies occurring within the building

c) Lessened impact of dynamic changes in power and grounding systems occurring at the building

d) Lessened influence onto other systems and tenants within the building

e) Suitability for co-locators

9A.9 Significant and unique powering and grounding problems

This subclause deals with the unique considerations that arise in powering and grounding telecommunications, IT, and distributed computing systems in commercial and industrial locations. Significant powering problems include those listed in Table 9A-5 and those discussed in Chapter 8.

Significant grounding problems include those listed in Table 9A-6 and those discussed in Chapter 8.

Other unique considerations include, but are not limited to, those listed in Table 9A-7.

Table 9A-5—Significant powering problems

Item	Significant powering problems
1.	Power system topology incompatible with distributed interdependent loads.
2.	Sharing of power circuit wiring such as the ac neutral.
3.	Interconnected equipment powered from different power sources.
4.	Equipment dual-powered from different power sources.
5.	Overloaded UPSs and ac power distribution circuits due to unforeseen peak demand (dynamic power management of electronic loads).
6.	Temporary wiring misapplied as fixed wiring. See 9.8.3.
7.	Distributed “equipment EMI-RFI filter noise” onto the grounding system due to the inherently unbalanced ac power system (grounded conductor).
8.	Improper sharing of dedicated dc power systems with nondedicated electronic loads.
9.	Partially uncontrolled dc return paths (leakage dc) for dc electronic loads (where DCEG and Return are bonded together at the load end). See 9.9.19.4.

Copyright © 2006 IEEE. All rights reserved.

Table 9A-6—Significant grounding problems

Item	Grounding problems
1.	The use of "unapproved grounds" for telecommunications systems.
2.	The use of "independent (unduly isolated) grounds" for telecommunications systems.
3.	The multigrounding effects of interconnected metallic wiring, cables, and shields.
4.	Unbalanced signal interfaces (ports).
5.	Shifts in ground reference potential.
6.	Influence of SPDs on network grounding topology.
7.	Influence from structure LPS grounding.
8.	Misapplication of industry-recognized ac and dc isolated (insulated) grounding and bonding topologies.
9.	Indiscriminately mixing or commingling common dc Return (dc-C) electronic load equipment with insulated (isolated) dc return (dc-I) electronic load equipment. See 9.9.18.
10.	Grounding and bonding paths carrying dc load current (leakage) while also exposed to lightning and other surge current activity.

Table 9A-7—Other unique powering and grounding problems

Item	Powering and grounding problems
1.	Determining interface requirements for certain RAAs. An example requirement for the grounding interface is to decouple all grounded telecommunications external links with fiber optics technology to help maintain the robustness of the RAA.
2.	Increased electrical and electromagnetic exposure of electronic equipment and associated metallic links located away from (distributed) the telecommunications or ITE room(s).
3.	Compliance to rules-of-interconnection (demarcation point or network interface) for regulated communications service providers (serving utilities) such as the local telecommunications company and cable TV company.
4.	Compliance to applicable codes, standards, and practices for CO-OSP, communications towers, etc.
5.	Compatibility of telecommunications co-located in the same building or equipment room that is also utilized by a TSP.
6.	Impracticality of provisioning a centralized ac power-conditioning topology for distributed subsystems.
7.	Impracticality of provisioning a common low-impedance grounding reference for distributed types of systems.
8.	Inaccessability to other equipment installations co-located in the same building that impinge on the powering and grounding of the telecommunications installation—yet may be inaccessible for troubleshooting and remedial action.

 Copyright © 2006 IEEE. All rights reserved.

Table 9A-7—Other unique powering and grounding problems *(continued)*

Item	Powering and grounding problems
9.	Maintaining compliance to strict rules for implementing an IBN for dc-powered large telecommunications systems, such as a centralized dc-powered private telecommunications switching system (PABX) located in an RAA equipment room.
10.	Decoupling of metallic interfaces where metallic connections (planned or unplanned) interconnect telecommunications equipment located (distributed) on different floors of a high-rise (multi-floor) building, on expansive floor spaces, in campus style buildings, and in separate buildings.
11.	Unequalized ground potentials generated across expansive floors, buildings, or between buildings. These differences in ground potentials are described in Chapter 3 as "ground reference problems."
12.	Constant fluctuations in power and electrical noise on the factory floor caused by motors, machinery, and other equipment. These fluctuations can affect the distributed computing equipment that controls the machinery.
13.	Compatibility with tower structures co-located (or nearby) to commercial and industrial buildings. Tower structures increase the risks of lightning surge currents, electromagnetic fields, and GPR to electrical and electronic equipment.
14.	The effect of inductive voltage rise on grounding and bonding conductors associated with distributed SPDs.
15.	The coordination of upstream versus downstream SPDs for ac power systems, dc power systems, and communications equipment and wiring.
16.	Implementing multi-service (multiport) surge protection units effectively. (Or how to accomplish equalized references for different SPDs distributed across the telecommunications system.)

Copyright © 2006 IEEE. All rights reserved.

Annex 9B

(normative)

Nomenclature

9B.1 General

The nomenclature and description for telecommunications-type electronic equipment addressed in Chapter 9 is somewhat arbitrary due to the many convoluted factors involving, codes, standards, convergence, etc. For example, the Alliance for Telecommunications Industry (ATIS) proposed a change to the term *communications equipment* for the NEC, Chapter 8.

> "Communications equipment: The electronic equipment that performs the telecommunications operations for the transmission of audio, video, and data, and including power equipment (e.g., dc converters, inverters, and batteries) and technical support equipment (e.g., computers)."

This proposed change illustrates ongoing industry restructuring of the nomenclature and description of electronic equipment.

Within this chapter, the word *telecommunications* is sometimes used interchangeably with the phrases *information technology* and *distributed computing.* The context of where *telecommunications* is used may help the reader determine when *information technology* or *distributed computing* are the traditional terms and should be read as such. This interchangeability is considered necessary due to the following:

a) The increasing technological convergence of telecommunications, computer, and control functions.

b) The fundamental role of the telecommunications infrastructure in transporting and switching information between computing equipment. The term *information communications technology* (ICT) is becoming increasingly used to describe this function.

c) Existing use of the terms *telephone* and *telecommunications* in product safety listings for ITE.

Telecommunications (converged) is considered to include traditional telecommunications systems [legacy equipment listed in the U.S. as telephone terminal equipment (TTE) to UL 1459-1995], embedded telecommunications functions within ITE (computer telephony), ITE, and communications links.

9B.2 Standards-based terminology

ANSI/TIA/EIA J-STD-607-A cites the commercial building ground reference access locations as "telecommunications grounding bus bar(s) (TGB)." Since most electronic equipment is referenced to building ground (for safety reasons), then most electronic equipment is seen from the building ground reference access location (TGB) as "telecommunications equipment."

9B.2.1 Adherence to TIA and BICSI commercial building terminology

Recommended practice is to utilize (where feasible) terminology adopted by the Telecommunications Industry Association (TIA) and the Building Industry Consulting Services International (BICSI) for telecommunications in a commercial building.

 Copyright © 2006 IEEE. All rights reserved.

9B.3 Use of the term *information technology*

Into the 1980s, information technology (IT) was comprised of two categories: data processing (DP) and office machine (OM). Today the term *information technology* can be applied to almost any electronic equipment that can process information. *Information technology equipment* is defined primarily by its product safety listing to UL 60950-2000 (for the U.S.). Today, telecommunications terminal equipment in the U.S. is product safety listed as ITE.

NOTE—Telecommunications network service providers (TSPs) may choose to use wording that differentiates the traditional TTE from ITE. For example, consider the following paragraph:

> Equipment that is intended for consumer's use, for use by an end user, or use by a general (non-craft) service provider employee is covered by UL 60950. Examples of this type of equipment are telephones, key systems, PABXs, modems, computers, information technology equipment (ITE), operator consoles, etc.

9B.4 Use of the term *Internet*

The term *Internet* is increasingly being used to identify ITE specifically designed and placed to carry out Internet functions. This term is also useful in describing Internet services providers (ISPs). These providers may operate as a commercial enterprise or as a regulated utility. This term is also useful in describing equipment and locations intended solely for the operation of the Internet.

9B.5 Use of the term *distributed computing*

Distributed computing is considered to include those aspects of the following:

a) Telecommunications and IT within the building that are not treated as a node or a central equipment space. An example is a local area network (LAN).

b) Control circuits/wiring and other specialized distributed data exchange systems within the building.

9B.6 Description by operating function

Equipment and systems may also be described according to their function as traditional telephone systems; telephone answering machines; fax machines; computer networks (LAN, WAN etc.) with servers, hubs, routers, switches, printers, etc.; desktop publishing computers and peripherals; ITE with integrated computer and telephony functions; Internet systems, nodes and links; industrial process control units; remote terminals; and other electronic equipment(s).

A distinguishing characteristic of legacy and modern "telecommunications function" equipment such as a PABX is the connectivity to communications links that terminate in a telecommunications switching center or similar facility. These links are predominantly the traditional *plain old telephone service* (POTS) twisted-pair cable. Also noteworthy is the product safety listing requirement for a supplemental grounding conductor connection to the equipment chassis. This connection is made to ensure foreign voltages impressed from the telecommunications lines do not charge up the chassis in the event the power system EGC is disconnected.

A distinguishing characteristic of legacy and modern ITE is the connectivity to data processing links that terminate primarily within the same building. Also noteworthy is that ITE is predominantly ac powered.

Copyright © 2006 IEEE. All rights reserved.

9B.7 Description by product safety approval

Equipment and systems may also be described according to their product safety approval documentation applicable to that locale. For example, new telecommunications and IT equipment in the U.S. are now approved for safety under UL 60950-1-2003.

NOTE—In the previous edition of this recommended practice, IEEE Std 1100-1999, new telecommunications equipment and ITE in the U.S. were approved for safety under UL 1459-1995 and UL 1950-1995, respectively.

UL 60950-1-2003 describes certain equipment types (among others) as data and text processing machines and associated equipment, data network equipment, telecommunication network infrastructure equipment, and telecommunication terminal equipment. Specific generic items mentioned include, but are not limited to:

> "Data preparation equipment, data processing equipment, data storage equipment, personal computers, plotters, printers, scanners, text processing equipment, visual display units, billing equipment, multiplexers, network powering equipment, network terminating equipment, radio base stations, repeaters, transmission equipment, telecommunication switching equipment, facsimile equipment, key telephone systems, modems, PABXs, pagers, telephone answering machines, telephone sets (wired and wireless)."

Municipal safety codes (electrical, building, fire) in localities such as New York, Chicago, Los Angeles, and Seattle require a product to be tested by an independent testing lab before it can be put into service.

 Copyright © 2006 IEEE. All rights reserved.

Annex 9C

(informative)

List of telecommunications-related industry guidelines

This annex is provided for information only and is not considered all-inclusive. The telecommunications industry and other interrelated industries develop codes, standards, practices, methods, and procedures related to powering and grounding electronic equipment. Many of the industry-accepted recommendations on these and related subjects are found in the following listing of guidelines.

Committee T1—Alliance for Telecommunications Industry Solutions (ATIS)[a] **1200 G Street NW, Suite 500, Washington, DC 20005, USA, tel. (202) 434-8836** ATIS is a U.S. based body that is committed to rapidly developing and promoting technical and operations standards for the communications and related information technologies industry worldwide using a pragmatic, flexible, and open approach. An ATIS standard is ANSI accredited and defines frameworks for service and performance requirements, interfaces, and physical characteristics for technologies, systems, and business processes, and ensures interoperability. ANSI Committee T1 standards on public telephone network applications may not be readily applicable, standardized, or normalized for the commercial or industrial location. In the absence of other standards specific to the commercial building, ANSI T1 standards may be the only viable resource. For European and worldwide locations, see also ETSI and ITU-T standards.		
ANSI	T1.304-1997	Ambient Temperature and Humidity Requirements for Network Equipment in Controlled Environments
This standard provides the ambient air temperatures and relative humidities for operation of all telecommunications equipment deployed in telephone central offices. Ambient temperatures and relative humidities for short-term emergencies are also described. Industrial instrumentation and environmental chamber testing procedures are defined for evaluating the functionality of the equipment at the thermal limits specified.		
ANSI	T1.308-1996 (R2002)	Central Office Equipment—Electrostatic Discharge Immunity Requirements
This standard provides ESD immunity criteria and test procedures for equipment assemblies intended for use in telephone central offices. It is intended to establish the capability of central office equipment to function normally after receiving typically encountered ESDs.		
ANSI	T1.311-1998	DC Power Systems—Telecommunications Environment Protection
This is a protection standard for the design and installation of telecommunications dc power systems in a controlled or limited access area. This standard is applicable to the design, engineering, installation, and acceptance of centralized dc power systems. This is the only national standard specifically intended for the acceptance of such systems.		
ANSI	T1.313-2003	Electrical Protection for Telecommunications Central Offices and Similar Type Facilities
Telecommunications central offices and similar-type facilities are often subjected to disturbances from lightning and ac power line faults, either directly or indirectly, through the communications cables and ac power facilities that serve them. This standard provides the minimum electrical protection, grounding, and bonding criteria necessary to mitigate the disruptive and damaging effects of lightning and ac power faults. It is intended to serve as a guide for designers of such facilities in the application of electrical protection and grounding and bonding as a function of the electrical environment.		
ANSI	T1.315-2001	Voltage Levels for DC-Powered Equipment Used in the Telecommunications Environment

Copyright © 2006 IEEE. All rights reserved.

This standard establishes requirements and objectives for voltage ranges and associated characteristics for telecommunications load equipment operating from centralized dc power systems, owned or operated by an exchange or inter-exchange carrier.		
ANSI	T1.316	Electrical Protection of Telecommunications Outside Plant
Telecommunications outside plants, by nature of their outdoor location, and frequent joint-use or joint right-of-way installations with power facilities, are often subject to disturbances and ac power faults. This standard provides the minimum electrical protection and grounding and bonding criteria necessary to mitigate the disruptive and damaging effects of lightning and ac power faults. It is intended to serve as a guide for designers of such facilities in the application of electrical protection and grounding and bonding as a function of the electrical environment.		
ANSI	T1.318	Electrical Protection Applied to Telecommunications Network Plant at Entrances to Customer Structures or Buildings
Telecommunications network plants are often subject to electrical disturbances from lightning and commercial ac power line faults, and as such, electrical protection is a necessary consideration at entrances to customer structures and buildings. This standard provides the minimum electrical protection and grounding and bonding criteria at telecommunications network entrances to customer structures and buildings. It is intended to serve as a guide for designers of such facilities in the application of electrical protection and grounding and bonding as a function of the electrical environment.		
ANSI	T1.320-1994 (R1999)	Above-Baseline Electrical Protection for Designated Telecommunications Central Offices and Similar-Type Facilities against High-Altitude Electromagnetic Pulse (HEMP)
Telecommunications central offices and similar-type facilities may be subjected to the effects of a high-altitude electromagnetic pulse (HEMP). HEMP is a by-product of a high altitude (i.e., above the atmosphere) nuclear explosion. Such a pulse is capable of causing extensive upset and possibly disabling damage to unprotected telecommunications facilities within line-of-sight of the nuclear device detonation point(s). Central offices and similar-type facilities that incorporate the baseline electrical protection measures specified in ANSI T1.313-1996 provide a measure of protection against the HEMP contingency. The purpose of this new above-baseline standard is to provide additional mitigation measures that will significantly increase the protection of critical components of the public telecommunications network in the event that it becomes exposed to the effects of HEMP. This standard is intended as a guide for the designers of such facilities in the application of basic HEMP protection measures to those central offices and similar-type facilities that may be specifically designated under government contract to receive such measures.		
ANSI	T1.321-1995 (R2000)	Electrical Protection for Network Operator-Type Equipment Positions
Electrical disturbances may appear at network operator-type equipment positions arising either from ESD or from other sources such as lightning or ac power disturbances. This standard provides ESD mitigating measures that are intended to control ESD in the network operator-user environment and electrical protection measures that are intended to minimize potential differences at network operator-type equipment positions.		
ANSI	T1.328-2001	Protection of Telecommunications Links from Physical Stress and Radiation Effects and Associated Requirements for DC Power Systems (A Baseline Standard)
This standard provides baseline measures describing the durability (survivability) of OSP copper-conductor and optical-fiber telecommunications distribution links to various levels of physical stress and radiation effects. The standard applies to optical-fiber and metallic links for trunk, feeder, and local distribution. The standard includes information for the design and installation of aerial, buried, and underground plant, and applies to all telecommunications networks including but not limited to exchange carriers and inter-exchange carriers. The standard is intended for new installations and not necessarily for replacement of existing systems. The standard addresses protection against threats such as wind, temperature, fire, water penetration, and the means to keep the links energized (telecommunications power).		
ANSI	T1.330-1997 (R2002)	Valve-Regulated Lead-Acid Batteries Used in the Telecommunications Environment

 Copyright © 2006 IEEE. All rights reserved.

This draft standard establishes requirements for VRLA (immobilized electrolyte) stationary cells and batteries used in telecommunications applications. It covers both absorbed as well as gelled electrolyte types as means for electrolyte immobilization and addresses the issues of gas recombination and thermal runaway.		
ANSI	T1.331-1999 (R2004)	Description of Above-Baseline Threats to Telecommunications Links
This standard describes physical threats to OSP copper-conductor and optical telecommunications distribution links. These physical threats exceed the levels of physical threat considered in the baseline standard and are not protected against as a generally accepted practice throughout the country. The standard describes threats such as vibration; liquid penetration in cables; radiation temperature, wind, and ice construction threats; corrosion; lightning and exposure to ac power; and loss of telecommunications power.		
ANSI	T1.332-1999	Electrical Protection of Broadband Facilities
Broadband facilities (including head end, switching centers, the OSP, and the interface point at customer locations) are often subjected to disturbances from lightning and ac power line faults, either directly or indirectly, through the telecommunications cables and ac power facilities that serve them. This standard provides the minimum electrical protection, grounding, and bonding criteria necessary to mitigate the disruptive and damaging effects of lightning and ac power faults. It is intended to serve as a guide for designers of such facilities in the application of electrical protection, grounding, and bonding as a function of the electrical environment.		
ANSI	T1.333-2001	Grounding and Bonding of Telecommunications Equipment
This standard defines and describes the grounding and bonding topologies commonly used for the installation of network telecommunications equipment in central offices and similar type facilities. It addressed the baseline grounding and bonding requirements for telecommunications equipment, the associated dc and ac power facilities, and the interfacing of co-located telecommunications systems installed in central offices and similar facilities. In addition, the document defines a harmonized grounding and bonding terminology, using the terminology developed by the Telecommunication Standardization Sector of the International Telecommunication Union (ITU-T). Grounding and bonding information from other standards related to telecommunications equipment is also included.		
ANSI	T1.334	Electrical Protection of Communications Towers and Structures
Communications towers and the associated structures, by nature of their outdoor location, are often subject to disturbances from lightning. This standard provides the minimum electrical protection, grounding, and bonding criteria necessary to mitigate the disruptive and damaging effects of lightning. It is intended to serve as a guide for designers or users of such facilities in the application of electrical protection, grounding, and bonding.		
ANSI	T1.337-2004	Requirements for Maximum Voltage, Current, and Power Levels in Network-Powered Transport Systems
Network powering of transport systems requires higher levels of voltage and current to efficiently and effectively provide quality broadband services at increased distances over network telecommunications plant. However, network-power transport systems designers must also consider the electrical environment that is created by the introduction of these voltages and currents into network and customer premises telecommunications facilities.		
ANSI	T1.338	Electrical Coordination of Primary and Secondary Surge Protection for Use in Telecommunications Circuits
This document covers the electrical coordination between primary and secondary SPDs that are both connected to ground. Proper coordination is essential to ensure that both primary and secondary protectors operate in a manner that provides the protected equipment with the most effective protection from ac power or lightning surges. This document does not address protection of the ac power service.		
ANSI	TIA/EIA J-STD-607-A	Commercial Building Grounding (Earthing) and Bonding Requirements for Telecommunications
The purpose of this standard is to enable the planning, design, and installation of telecommunications grounding and bonding systems that will subsequently be installed. This standard also provides recommendations for grounding and bonding of customer-owned towers and antennas. This telecommunications grounding and bonding infrastructure supports a multivendor, multiproduct environment as well as various system installation practices.		

Copyright © 2006 IEEE. All rights reserved.

Building Industry Consulting Services International (BICSI)[b] **8610 Hidden River Parkway, Tampa, FL 33637-1000, USA, tel. (800) 242-7405** BICSI offers a complete library of specialized information transport systems reference books and technical manuals. Written and edited by experts in their fields, BICSI publications are standards-based, vendor-neutral, and are known for their careful research, precise writing, detailed graphics and tables, and easy-to-understand format.		
BICSI	CO-OSP Design Manual, 3rd edition, 2004 [B1]	Customer-Owned Outside Plant Design Manual
This manual provides a comprehensive overview of the components of OSP design and is illustrated and indexed.		
BICSI	ITSI Manual, 4th edition, 2004	Information Transport Systems Installation Manual
Provides cabling installation personnel with guidelines necessary to perform specific job tasks. Provides detailed information on pathways, spaces, associated hardware, and structured cabling and optical-fiber systems within commercial buildings		
BICSI	NDR Manual, 5th edition, 2003	Network Design Reference Manual
Contains 13 chapters and provides in-depth, up-to-date information on the following topics: networking—LANs, remote access, and Internet works; connectivity—cabling systems, wireless networks, and telecommunications circuits; fundamental technologies—Ethernet, Internet protocol (IP), and network storage; administration—security and network management; emerging applications—Voice over IP (VoIP), real-time video, and video content distribution.		
BICSI	TDM Manual, 10th edition, 2003 [B9]	Telecommunications Distribution Methods Manual
The tenth edition TDM Manual takes you from the design through construction, installation, and maintenance of cabling infrastructure in commercial and multi-dwelling residential buildings. The TDM Manual provides a comprehensive overview of the telecommunications distribution, from design through construction, installation, and maintenance.		
BICSI	WDR Manual, 1st edition, 2004	Wireless Design Reference Manual
Contains the technical know-how to plan, design, and implement a wide spectrum of wireless design projects.		
European Telecommunications Standards Institute (ETSI)[c] **850 routes des Lucioles, 06921 Sophia Antipolis, Cedex, France, tel. + 33 (0)4 92 94 42 00** ETSI produces European Telecommunications Standards (ETSs). These standards are primarily intended for use in the European community. For U.S. and Canadian locations, see also ANSI T1 and TIA standards.		
ETSI	ETS 300 132-1, edition 1–09/1996	Equipment Engineering (EE): Power supply interface at the input to the telecommunications equipment—Part 1: Interfaces operated by alternating current (ac) derived from direct current (dc) sources
This ETS details the requirements for the interface between telecommunications equipment and its power supply, and includes requirements relating to its stability and measurement. This document contains requirements for the output performance of the (stabilized) ac power supply derived from dc sources as specified in ETS 300 132-2 and the input of the telecommunications equipment connected to interface A, powered by ac not directly provided by the mains. This ETS also makes reference to safety and EMC standards that are in accordance with the relevant European and international standards. This ETS aims at providing compatibility between the power supply equipment and the power consuming telecommunications equipment, and also between different load units connected to the same power supply.		
ETSI	ETS 300 132-2, V2.1.2 09/2003	Equipment Engineering (EE): Power supply interface at the input to the telecommunications equipment—Part 2: Operated by direct current (dc) sources

 Copyright © 2006 IEEE. All rights reserved.

This ETS concerns the requirements for the interface between telecommunications equipment and its power supply and includes requirements relating to its stability and measurement. This document contains requirements for the output performance of the dc power equipment at the interface A and the input of the telecommunications equipment connected to interface A powered by dc. The dc voltage at interface A may be derived from the ac primary supply. The dc supply may incorporate a back-up battery. If any other equipment, e.g., datacom equipment, are connected to interface A in parallel to telecommunications equipment, all requirements addressed in Clause 4 of this ETS document must be fulfilled. This ETS aims at providing compatibility between the power supply equipment and the power consuming telecommunications equipment, and also between different system blocks connected to the same power supply.		
ETSI	ETS 300 132-3, V1.2.1 08/2003	Environmental Engineering (EE): Power supply interface at the input to telecommunications equipment—Part 3: Operated by rectified current source, alternating current source, or direct current source up to 400 V
This ETS concerns the requirements for the interface between telecommunications equipment and its power supply, and includes requirements relating to its stability and measurement. This document contains requirements for the output performance of the power equipment at the interface A3 and the input of the telecommunications equipment connected to interface A3. The voltage at interface A3 may be the ac mains, a rectified voltage derived from ac three-phase mains, a rectified voltage derived from ac single-phase mains, or a low voltage derived from a battery. The power supply equipment may incorporate a back-up battery. This ETS aims at providing compatibility between the power supply equipment and both the telecommunications equipment and the different load units connected to the same interface A3 (e.g., datacom equipment).		
ETSI	ETS 300 253, V2.1.1 April 2004	Equipment Engineering (EE): Earthing and bonding of telecommunication equipment inside telecommunication centers
This ETS addresses earthing and bonding of telecommunication equipment in telecommunication centers in relation to safety, functional performance, and EMC. ITU-T K.27-1996 deals with bonding configurations and earthing inside a telecommunication building. One bonding configuration only is selected from ITU-T K.27 (CBN/mesh-BN) and tailored to the present document. This document applies in telecommunication centers and similar installations to the bonding network of the building, the bonding network of the equipment, and the interconnection between these two networks. It contributes to the standardization of telecommunication and datacom equipment installation. It also coordinates with the preconditions of the installation to achieve the following targets: safety from electrical hazards; reliable signal reference; and satisfactory EMC performance.		
ETSI	EN 300 386-1, (1994-12)	Equipment Engineering (EE): Telecommunication network equipment; Electromagnetic compatibility (EMC) requirements—Part 1: Product family overview, compliance criteria, and test levels
To set up a complete EMC product specification based on European and international standards for equipment installed in telecom centers and used in the public telecommunication network.		
ETSI	EN 300 386, V1.3.2 (2003-105)	Electromagnetic compatibility and radio spectrum matters (ERM); Telecommunication network equipment; Electromagnetic compatibility (EMC) requirements
This revision makes the standard conform to requirements of a harmonized standard under the EMC Directive, following guidelines of ETR 238. This document also reexamines definitions of major and minor telecom centers and specifies the limits and methods of measurement for conducted radio-frequency emissions from telecommunications ports.		
ETSI	EN 300 386-2, V1.1.3 (1997-12)	Electromagnetic compatibility (EMC) and radio spectrum Matters (ERM); Telecommunication network equipment; Electromagnetic compatibility (EMC) requirements—Part 2: Product family standard

Copyright © 2006 IEEE. All rights reserved.

This document specifies the product specific EMC compliance criteria for non-radio network equipment to satisfy the EMC requirements specified in Part 1. The document defines the product-specific immunity and emission performance criteria and operating conditions for equipment intended to be used within a telecommunications network; general purpose equipment that is used as a part of a switching system may be covered by the scope of other standards. For such equipment, if those other standards fully cover all the requirements of the present document, no further requirements are necessary. Switching equipment can also contain transmission functions, and this has to be recognized during testing.		
International Electrotechnical Commission (IEC)[d] **IEC Central Office** **3 Rue de Varembe, PO Box 131, CH-1211 Geneva 20, Switzerland, tel. +41 22 919 02 11** **T**he IEC is the leading global organization that prepares and publishes international standards for all electrical, electronic, and related technologies. These serve as a basis for national standardization and as references when drafting international tenders and contracts. Through its members, the IEC promotes international cooperation on all questions of electrotechnical standardization and related matters, such as the assessment of conformity to standards, in the fields of electricity, electronics, and related technologies. The IEC charter embraces all electrotechnologies including electronics, magnetics and electromagnetics, electroacoustics, multimedia, telecommunication, and energy production and distribution, as well as associated general disciplines such as terminology and symbols, EMC, measurement and performance, dependability, design and development, safety, and the environment. For U.S. and Canadian locations, see also ANSI T1 and TIA standards.		
IEC	60364-4-44, consol. edition 1.1 (incl. amd. 1) (2003-12)	Electrical installations of buildings—Part 4-44: Protection for safety—Protection against voltage disturbances and electromagnetic disturbances
Part 4-44 of IEC 60364 provides rules for the protection against the effects of conducted and radiated disturbances on electrical installations. The rules of this standard do not apply to systems which are wholly or partly under control of public power supply companies (see scope of IEC 60364-1). The fault current flowing in the earth electrode of the exposed conductive parts of the substation causes a significant rise of the potential of the exposed conductive parts of the substation to the general mass of the earth, i.e., a fault voltage, whose magnitude is governed by the fault-current magnitude and the resistance of the earth electrode of the exposed conductive parts of the substation. The fault current may cause a general rise of the potential of the low-voltage system with respect to earth, i.e., stress voltage which may cause a breakdown of the insulation in low-voltage equipment, a general rise of the potential of the exposed conductive parts of the low-voltage system with respect to earth, which may give rise to fault voltage and touch voltages. NOTE 1—In this standard, the expression *high-voltage* (HV) refers to voltages exceeding the upper limit 0 voltage band II. The expression *low-voltage* (LV) refers to voltages not exceeding the upper limit of voltage band II. Clause 443 is intended to describe the means by which transient voltages can be limited to reduce the risk to an acceptable level of failure in the installation and in electrical equipment connected to it. This approach is in line with the principles of insulation coordination contained in IEC 60664-1:2002. IEC 60664-1 requires technical committees to specify an appropriate impulse withstand category (overvoltage category) for their equipment; this means a minimum impulse withstand voltage for the equipment, according to its application and the related impulse withstand categories NOTE 2—In accordance with 2.2.2.1.1 of IEC 60664-1:2002, technical committees should specify the relevant information. It is recommended to indicate the rated impulse withstand voltage applicable to the equipment and the way this is provided. In clause 444, basic recommendations are described to mitigate electromagnetic disturbances. Actually EMI can disturb or damage IT systems or equipment, equipment with electronic components or circuits. Currents due to lightning, switching operations, short circuits, and other electromagnetic phenomena can cause overvoltages and EMI. These effects appear where large metal loops exist and where different electrical wiring systems are installed on different routes, e.g., for power supply and for signaling ITE within a building.		
IEC	60364-5-54, edition 2.0 (2002-06)	Electrical installations of buildings—Part 5-54: Selection and erection of electrical equipment—Earthing arrangements, protective conductors, and protective bonding conductors
This part of IEC 60364 addresses the earthing arrangements, protective conductors, and protective bonding conductors in order to satisfy the safety of the electrical installation.		
IEC	60950-1, edition 1.0 (2001-10)	Information technology equipment——Safety—Part 1: General requirements

 Copyright © 2006 IEEE. All rights reserved.

This standard is applicable to mains-powered or battery-powered ITE, including electrical business equipment and associated equipment, with a rated voltage not exceeding 600 V. This standard is also applicable to such ITE designed for use as telecommunication terminal equipment and telecommunication network infrastructure equipment, regardless of the source of power; designed and intended to be connected directly to, or used as infrastructure equipment in, a cable distribution system, regardless of the source of power; designed to use the ac mains supply as a communication transmission medium. This standard specifies requirements intended to reduce risks of fire, electric shock, or injury for the operator and layman who may come into contact with the equipment and, where specifically stated, for a service person. This standard is intended to reduce such risks with respect to installed equipment, whether it consists of a system of interconnected units or independent units, subject to installing, operating, and maintaining the equipment in the manner prescribed by the manufacturer.		
IEC	60950-21, edition 1.0 (2002-12)	Information technology equipment——Safety—Part 21: Remote power feeding
This part of IEC 60950 applies to ITE intended to supply and receive operating power via a telecommunication network, where the voltage exceeds the limits for TNV circuits.		
IEC	61000-3-2 (2004-11)	Electromagnetic compatibility (EMC)—Part 3-2: Limits—Limits for harmonic current emissions (equipment input current ≤16 A per phase)
This part of IEC 61000 deals with the limitation of harmonic currents injected into the public supply system. It specifies limits of harmonic components of the input current that may be produced by equipment tested under specified conditions. Harmonic components are measured according to Annexes A and B. This part of IEC 61000 is applicable to electrical and electronic equipment having an input current up to and including 16 A per phase, and intended to be connected to public low-voltage distribution systems. Arc welding equipment that is not professional equipment, with input current up to and including 16 A per phase, is included in this standard. Arc welding equipment intended for professional use, as specified in IEC 60974-1, is excluded from this standard and may be subject to installation restrictions as indicated in IEC 61000-3-4. NOTE 1—It is intended to replace technical report IEC 61000-3-4 by an international standard, IEC 61000-3-12 (under consideration). The tests according to this standard are type tests. Test conditions for particular equipment are given in Annex C. For systems with nominal voltages less than 220 V (line-to-neutral), the limits have not yet been considered. NOTE 2—The words *apparatus, appliance, device*, and *equipment* are used throughout this standard. They have the same meaning for the purpose of this standard.		
IEC	61000-3-3, edition 1.1 (2002-03)	Electromagnetic compatibility (EMC—Part 3-3: Limits—Limitation of voltage changes, voltage fluctuations, and flicker in public low-voltage supply systems, for equipment with rated current <= 16 A per phase and not subject to conditional connection
This part of IEC 61000-3 is concerned with the limitation of voltage fluctuations and flicker impressed on the public low-voltage system. It specifies limits of voltage changes that may be produced by equipment tested under specified conditions and gives guidance on methods of assessment. This part of IEC 61000 is applicable to electrical and electronic equipment having an input current equal to or less than 16 A per phase, intended to be connected to public low-voltage distribution systems of between 220 V and 250 V line-to-neutral at 50 Hz, and not subject to conditional connection. Equipment that does not comply with the limits of this part of IEC 61000 when tested with the reference impedance *Z*ref of 6.4 and that therefore cannot be declared compliant with this part may be retested or evaluated to show conformity with IEC 61000-3-11. Part 3-11 is applicable to equipment with rated input current ≤75 A per phase and subject to conditional connection. The tests according to this part are type tests. Particular test conditions are given in Annex A, and the test circuit is shown in Figure 1. NOTE—The limits in this part of IEC 61000 are based mainly on the subjective severity of flicker imposed on the light from 230 V/60 W coiled-coil filament lamps by fluctuations of the supply voltage. For systems with nominal voltage less than 220 V line to neutral and/or frequency of 60 Hz, the limits and reference circuit values are under consideration.		
IEC	61000-5-2 (1997-11)	Electromagnetic compatibility (EMC)—Part 5: Installation and mitigation guidelines—Section 2: Earthing and cabling

Copyright © 2006 IEEE. All rights reserved.

This technical report (type 3) covers guidelines for the earthing and cabling of electrical and electronic systems and installations aimed at ensuring EMC among electrical and electronic apparatus or systems. More particularly, it is concerned with earthing practices and with cables used in industrial, commercial, and residential installations. This document is intended for use by installers and users, and to some extent, manufacturers of sensitive electrical or electronic installations and systems, and equipment with high emission levels that could degrade the overall electromagnetic environment. It applies primarily to new installations, but where economically feasible, it may be applied to extensions or modifications to existing facilities. It is important to note that the recommendations presented in this technical report do not seek to preclude existing installation practices, when they have been shown to perform satisfactorily. Special mitigation methods might not be necessary when the equipment satisfies applicable emissions and immunity standards. In particular, some installation practices such as a "Star Network" or "Isolated Bonding Network" for earthing are based on different approaches to EMC that have been found satisfactory for specific installations when correctly applied and the topology maintained by competent specialists. Nevertheless, the approach recommended here is more generally applicable to all types of facilities, especially when signals are exchanged between different apparatus.		
IEC	61000-6-1 (2005-03)	Electromagnetic compatibility (EMC)—Part 6-1 Generic standards—Immunity for residential, commercial and light-industrial environments
This standard applies to apparatus intended to be directly connected to a low-voltage public mains network or connected to a dedicated dc source that is intended to interface between the apparatus and the low-voltage public mains network. This standard applies also to apparatus that is battery operated or is powered by a non-public, but non-industrial, low-voltage power distribution system if this apparatus is intended to be used in the locations describe. The environments encompassed by this standard are residential, commercial, and light-industrial locations, both indoor and outdoor. The following list, although not comprehensive, gives an indication of locations that are included: residential properties, for example houses, apartments; retail outlets, for example shops, supermarkets; business premises, for example offices, banks; areas of public entertainment, for example cinemas, public bars, dance halls; outdoor locations, for example petrol stations, car parks, amusement and sports centers; and light-industrial locations, for example workshops, laboratories, service centers. Locations that are characterized by being supplied directly at low voltage from the public mains network are considered to be residential, commercial, or light-industrial. The object of this standard is to define the immunity test requirements for apparatus specified in the scope in relation to continuous and transient, conducted and radiated disturbances including ESDs. The immunity requirements have been selected to ensure an adequate level of immunity for apparatus at residential, commercial and light-industrial locations. The levels do not, however, cover extreme cases, which may occur at any location, but with an extremely low probability of occurrence. Not all disturbance phenomena have been included for testing purposes in this standard but only those considered as relevant for the equipment covered by this standard. These test requirements represent essential EMC immunity requirements. NOTE—Information on other disturbance phenomena is given in IEC 61000-4-1:2000.		
IEC	CISPR 61000-6-3, edition 1.0 (1996-12)	Electromagnetic compatibility (EMC)—Part 6: Generic standards—Section 3: Emission standard for residential, commercial, and light-industrial environments
This international standard for emission requirements applies to electrical and electronic apparatus intended for use in the residential, commercial, and light-industrial environment, as described in clause 5, for which no dedicated product or product-family emission standard exists. Apparatus designed to radiate electromagnetic energy for radio communication purposes is excluded from this standard. Disturbances in the frequency range 0 Hz to 400 GHz are covered. Where a relevant dedicated product or product-family EMC emission standard exists, this shall take precedence over all aspects of this generic standard. The emission requirements have been selected so as to ensure that disturbances generated by apparatus operating normally at residential, commercial, and light-industrial locations do not exceed a level that could prevent other apparatus from operating as intended. Fault conditions of apparatus are not taken into account. Apparatus installed in the locations covered by this standard are considered to be directly connected to low-voltage public mains supplies or to a dedicated dc source that is intended to interface between the apparatus and the low-voltage public mains supply. Apparatus intended to be connected to an industrial power network or to special power supply sources is covered by another generic standard.		
IEC	TR 61000-5-6, 2nd edition (2005-01)	Electromagnetic compatibility (EMC)—Part 5-6: Installation and mitigation guidelines—Mitigation of external EM influences

 Copyright © 2006 IEEE. All rights reserved.

This part of IEC 61000 covers guidelines for the mitigation of external electromagnetic (EM) influences impinging upon a facility, aimed at ensuring EMC among electrical and electronic apparatus or systems. These influences include lightning, RF transmitters, power line and telecom transients, HEMP, and other high-power electromagnetic transients. More particularly, this technical report is concerned with the arrangement of shielding and screening against radiated disturbances, and with mitigation of conducted disturbances. These arrangements include appropriate electromagnetic barriers for industrial, commercial, and residential installations. The concept of barriers installed for mitigating potentially penetrating and unwanted electromagnetic noise is applicable even when there is no designed in electromagnetic shield. The enclosure through which power and signal (communications, control, etc.) cables must enter or exit may be considered as a potential electromagnetic barrier that will provide some level of protection. The concept of enclosure can be understood as the perimeter walls of a building, the walls of a single room, or the housing of an apparatus, with protection installed at all points of electromagnetic penetration into the enclosure. This technical report is intended for use by installers, manufacturers, and users of sensitive electrical or electronic installations or systems, and of equipment with emission levels that could degrade the overall electromagnetic environment. It applies primarily to new installations, but where economically feasible, it may be applied to extensions or modifications to existing facilities. While the technical principles are applicable to individual equipment or apparatus, such application is not included in the scope of this technical report.		
IEC	TS 61000-1-2, edition 1.0 (2001-06)	Electromagnetic compatibility (EMC)—Part 1-2: General—Methodology for the achievement of the functional safety of electrical and electronic equipment with regard to electromagnetic phenomena
This technical specification specifies a methodology for the achievement of functional safety with regard to electromagnetic phenomena of electrical and electronic equipment: apparatuses, systems and installations, as installed and used under operational conditions. It specifies procedures for determining requirements for design aspects, including installation of the equipment, analytical assessment methods, testing recommendations, and documentation. It is not concerned with direct hazards from electromagnetic fields on living beings nor is it concerned with safety related to breakdown of insulation or other mechanisms by which persons can be exposed to electrical hazards. This technical specification applies to the influence of the electromagnetic environment including adjacent devices on apparatuses and small or large systems, however, not to the influence of internal sources in the apparatuses, which have to be considered in relation with their design. It is intended for product committees, designers, manufacturers, and installers of equipment and systems. This document is focused on the safety analysis and testing methods related to electromagnetic influences. With regard to quantitative assessment methods, i.e., probability of failures, the methods described in the IEC 61508 series can be applied.		
IEC	TS 61312-3, edition 1.0 (2000-07)	Protection against lightning electromagnetic impulse—Part 3: Requirements of surge protective devices (SPDs)
This technical specification deals with the requirements of SPDs standardized by IEC 61643-1:2005. These SPDs are installed according to the Lightning Protection Zones concept given by IEC 61312-1:1995. First, starting from primary relevant threats, this technical specification gives instructions for the determination of the stress for individual SPDs. For SPDs installed within a complex system, it is admissible to divide the system into simple basic arrangements, observing the rules described in this technical specification. When the values and directions of the partial lightning currents flowing within the system are known, the appropriate SPDs can be selected. This document also deals with basic questions of the energy coordination of SPDs among each other and between SPDs and the equipment to be protected. The specific characteristics of the individual SPDs and the threat at the respective place of installation are to be considered for effective coordination. The proof of the coordination of SPDs installed in a system is described briefly in this specification.		
IEC	61643-1, edition 2.0 (2003-05)	Low-voltage surge protective devices—Part 1: Surge protective devices connected to low-voltage power distribution systems—Requirements and tests
This part of IEC 61643 is applicable to devices for surge protection against indirect and direct effects of lightning or other transient overvoltages. These devices are packaged to be connected to 50/60 Hz ac and dc power circuits and equipment rated up to 1000 V rms or 1500 V dc Performance characteristics, standard methods for testing, and ratings are established for these devices that contain at least one nonlinear component that is intended to limit surge voltages and divert surge currents.		
IEC	61643-12, edition 1.0 (2002-02)	Low-voltage surge protective devices—Part 12: Surge protective devices connected to low-voltage power distribution systems—Selection and application principles

Copyright © 2006 IEEE. All rights reserved.

This parts of IEC 61643 describes the principles for selection, operation, location, and coordination of SPDs to be connected to 50 Hz to 60 Hz ac and to dc power circuits and equipment rated up to 1000 V rms or 1500 V dc. NOTE 1—Additional requirements may be necessary for special applications such as electrical traction, etc. NOTE 2—It should be remembered that IEC 60364 is also applicable. NOTE 3—This standard deals only with SPDs and not with SPD components integrated inside equipment.		
IEC	TRF 61643-21, edition 1.0 (2004-05)	Low-voltage surge protective devices—Part 21: Surge protective devices connected to telecommunications and signaling networks—Performance requirements and testing methods
This Test Report Form applies to IEC 61643-21:2000.		
IEC	61643-21, edition 1.0 (2000-09)	Low-voltage surge protective devices—Part 21: Surge protective devices connected to telecommunications and signaling networks—Performance requirements and testing methods
This international standard is applicable to devices for surge protection of telecommunications and signaling networks against indirect and direct effects of lightning or other transient overvoltages. The purpose of these SPDs is to protect modern electronic equipment connected to telecommunications and signaling networks with nominal system voltages up to 1000 V (rms) ac and 1500 V dc.		
IEC	61643-22, edition 1.0 (2004-07)	Low-voltage surge protective devices—Part 22: Surge protective devices connected to telecommunications and signaling networks—Selection and application principles
This part of IEC 61643 describes the principles for the selection, operation, location, and coordination of SPDs connected to telecommunication and signaling networks with nominal system voltages up to 1000 V rms ac and 1500 V dc. This standard also addresses SPDs that incorporate protection for signaling lines and power lines in the same enclosure.		
IEC	61643-311, edition 1.0 (2001-10)	Components for low-voltage surge protective devices—Part 311: Specification for gas discharge tubes (GDT)
GDTs are used for applications up to 1000 V ac or 1500 V dc in communication or signaling circuits. They are defined as a gap, or series of gaps, in an enclosed discharge medium other than air. They are designed to protect apparatus or personnel, or both, from high transient voltages. This standard does not specify requirements applicable to complete SPDs, nor does it specify total requirements for GDTs employed within electronic devices, where precise coordination between GDT performance and SPD withstand capability is highly critical. This part of IEC 61643 deals with GDTs having two or three electrodes; does not deal with mountings and their effect on GDT characteristics. Characteristics given apply solely to GDTs mounted in the ways described for the tests; does not deal with mechanical dimensions; does not deal with quality assurance requirements; may not be sufficient for GDTs used on high-frequency or multi-channel systems; does not deal with electrostatic voltages; does not deal with GDTs connected in series with voltage-dependent resistors in order to limit follow-on currents in electrical power systems; and does not deal with hybrid or composite GDT devices.		
IEC	61643-321, edition 1.0 (2001-12)	Components for low-voltage surge protective devices—Part 321: Specifications for avalanche breakdown diode (ABD)
This part of IEC 61643 is applicable to ABDs that represent one type of SPD component (hereinafter referred to as SPDC) used in the design and construction of SPDs connected to low-voltage power distribution systems, transmission, and signaling networks. Test specifications in this standard are for single ABDs consisting of two terminals. However, multiple ABDs may be assembled within a single package defined as a diode array. Each diode within the array can be tested to this specification. This standard contains a series of test criteria for determining the electrical characteristics of the ABD. From the standard test methods described herein, the performance characteristics and ratings of the ABD can be verified or established for specific packaged designs.		
IEC	61643-331, edition 1.0 (2003-05)	Components for low-voltage surge protective devices—Part 331: Specification for metal-oxide varistors (MOV)

 Copyright © 2006 IEEE. All rights reserved.

This part of IEC 61643 is a test specification for MOV, which are used for applications up to 1000 V ac or 1500 V dc. in power line, or telecommunication, or signaling circuits. They are designed to protect apparatus or personnel, or both, from high transient voltages. This specification applies to MOVs having two electrodes and does not deal with hybrid devices. This specification also does not apply to mountings and their effect on the MOV's characteristics. Characteristics given apply solely to the MOV mounted only in the ways described for the tests.		
IEC	61643-341, edition 1.0 (2001-11)	Components for low-voltage surge protective devices—Part 341: Specification for thyristor surge suppressors (TSS)
This part of IEC 61643 is a test specification standard for TSS components designed to limit overvoltages and divert surge currents by clipping and crowbarring actions. Such components are used in the construction of SPDs, particularly as they apply to telecommunications. This standard contains information on terms, letter symbols, and definitions; basic functions, configurations and component structure service conditions, and fault modes rating verification and characteristic measurement.		
IEC	TR 62066, edition 1.0 (2002-06)	Surge overvoltages and surge protection in low-voltage ac power systems—General basic information
IEC 62066 is a technical report that presents a general overview on the different kinds of surge overvoltages that can occur on low-voltage installations. Typical surge magnitude and duration as well as frequency of occurrence are described. Information on overvoltages resulting from interactions between power system and communications system is also provided. Additionally, general guidelines are given concerning surge protection means and systems on the basis of availability and risk considerations, including interactions and the need for coordination and consideration of temporary overvoltages in the selection of SPDs.		
Institute of Electrical and Electronics Engineers (IEEE)[e] **IEEE Operations Center** **445 Hoes Lane, Piscataway, NJ 08854, USA, tel. (732) 981 0060** The IEEE promotes the engineering process of creating, developing, integrating, sharing, and applying knowledge about electro and information technologies and sciences for the benefit of humanity and the profession.		
IEEE	C2- 2002	National Electrical Safety Code (NESC)
The NESC covers electrical power distribution requirements for systems within the responsibility of power, communications, and similar utilities. There are often requirements for (tele)communications wiring within power utility service areas. Most local jurisdictions in the U.S. require adherence to the NESC (some to an earlier version NESC).This code describes the practical safeguarding of persons during the installation, operation, or maintenance of electric supply and communications lines and associated equipment. For building distribution and utilization wiring requirements, see the NEC.		
IEEE	Std 141™	IEEE Recommended Practice for Electric Power Distribution for Industrial Plants *(IEEE Red Book)*
This document provides a recommended practice for the electrical design of industrial facilities. It is likely to be of greatest value to the power-oriented engineer with limited industrial plant experience. It can also be an aid to all engineers responsible for the electrical design of industrial facilities. However, it is not intended as a replacement for the many excellent engineering texts and handbooks commonly in use, nor is it detailed enough to be a design manual. It should be considered a guide and general reference on electrical design for industrial plants and buildings.		
IEEE	Std 142™	IEEE Recommended Practice for Grounding of Industrial and Commercial Power Systems *(IEEE Green Book)*

Copyright © 2006 IEEE. All rights reserved.

The problems of system grounding, that is, connection to ground of neutral, of the corner of the delta, or of the midtap of one phase, are covered. The advantages and disadvantages of grounded s. ungrounded systems are discussed. Information is given on how to ground the system, where the system should be grounded, and how to select equipment for the grounding of the neutral circuits. Connecting the frames and enclosures of electric apparatus, such as motors, switchgear, transformers, buses, cables conduits, building frames, and portable equipment, to a ground system is addressed. The fundamentals of making the interconnection or ground-conductor system between electric equipment and the ground rods, water pipes, etc., are outlined. The problems of static electricity—how it is generated, what processes may produce it, how it is measured, and what should be done to prevent its generation or to drain the static charges to earth to prevent sparking—are treated. Methods of protecting structures against the effects of lightning are also covered. Obtaining a low-resistance connection to the earth, use of ground rods, connections to water pipes, etc., is discussed. A separate chapter on sensitive electronic equipment is included.		
IEEE	Std 241™	IEEE Recommended Practice for Electric Power Systems in Commercial Buildings *(IEEE Gray Book)*
A guide and general reference on electrical design for commercial buildings is provided. It covers load characteristics; voltage considerations; power sources and distribution apparatus; controllers; services, vaults, and electrical equipment rooms; wiring systems; systems protection and coordination; lighting; electric space conditioning; transportation; communication systems planning; facility automation; expansion, modernization, and rehabilitation; special requirements by occupancy; and electrical energy management. Although directed to the power-oriented engineer with limited commercial building experience, it can be an aid to all engineers responsible for the electrical design of commercial buildings. This recommended practice is not intended to be a complete handbook; however, it can direct the engineer to texts, periodicals, and references for commercial buildings and act as a guide through the myriad of codes, standards, and practices published by the IEEE, other professional associations, and governmental bodies.		
IEEE	Std 242™-2001	IEEE Recommended Practice for Protection and Coordination of Industrial and Commercial Power Systems *(IEEE Buff Book)*
This standard emphasizes up-to-date techniques in power system protection and coordination that are most applicable to industrial and commercial power systems. Coverage is limited to system protection and coordination as it pertains to system design treated in IEEE Std 141 and IEEE Std 241. No attempt is made to cover utility systems or residential systems, although much of the material presented is applicable to these systems. This publication presents in a step-by-step, simplified, yet comprehensive, form the principles of system protection and the proper application and coordination of those components that may be required to protect industrial and commercial power systems against abnormalities that could reasonably be expected to occur in the course of system operation. The principles presented are applicable to both new electrical system design and to the changing, upgrading, or expansion of an existing electrical distribution system.		
IEEE	Std 367™-1996	IEEE Recommended Practice for Determining the Electric Power Station Ground Potential Rise and Induced Voltage from a Power Fault
This recommended practice provides guidance for the calculation of power station GPR and longitudinal induction (LI) voltages, as well as for their appropriate reduction from worst-case values, for use in metallic telecommunication protection design.		
IEEE	Std 446™	IEEE Recommended Practice for Emergency and Standby Power Systems for Industrial and Commercial Applications *(IEEE Orange Book)*
This recommended practice addresses the uses, power sources, design, and maintenance of emergency and standby power systems. Chapter 3 is a general discussion of needs for and the configuration of emergency and standby systems. Chapter 9 lists the power needs for specific industries. Chapters 4 and 5 deal with selection of power sources. Chapter 6 provides recommendations for protecting both power sources and switching equipment during fault conditions. Chapter 7 provides recommendations for design of system grounding, and Chapter 10 provides recommendations for designing to reliability objectives. Chapter 8 provides recommended maintenance practices.		
IEEE	Std 487™-2000	IEEE Recommended Practice for the Protection of Wireline Communication Facilities Serving Electric Supply Locations

 Copyright © 2006 IEEE. All rights reserved.

This recommended practice presents workable methods for protecting wireline communication circuits entering electric supply locations. This document covers: the electric supply location environment; protection apparatus; services types, reliability, service performance objective classifications, and transmission considerations; protection theory and philosophy; protection configurations; installation and inspection; and safety.		
IEEE	Std 602™-1996	IEEE Recommended Practice for Electric Systems in Health Care Facilities *(IEEE White Book)*
A recommended practice for the design and operation of electric systems in health care facilities is provided. The term *health care facility*, as used here, encompasses buildings or parts of buildings that contain hospitals, nursing homes, residential custodial care facilities, clinics, ambulatory health care centers, and medical and dental offices. Buildings or parts of buildings within an industrial or commercial complex, used as medical facilities, logically fall within the scope of this book.		
IEEE	Std 776™-1992 (R2003)	IEEE Recommended Practice for Inductive Coordination of Electric Supply and Communications Lines
The inductive environment that exists in the vicinity of electric power and wire-line telecommunications systems and the interfering effects that may be produced are addressed. An interface that permits either party, without need to involve the other, to verify the induction at the interface by use of a probe wire is presented.		
IEEE	Std 820™-1984	IEEE Standard Telephone Loop Performance Characteristics
This standard covers the general parameters and characteristics associated with telephone loops from the subscriber signaling and analog voice frequency interface to the local Class 5 switch interface. It includes only those business and residential lines in the North American public switched network where no special performance requirements are involved. This standard provides common denominators for subscriber line performance, independent of facility types, construction processes or equipment, and circuit provisioning methods. This standard does not attempt to allocate impairments to the individual facilities and equipments that comprise the subscriber line. Such allocations are performed by the service providers to achieve the overall loop and telephone system performance.		
IEEE	Std 1137™-1991 (R2003)	IEEE Guide for the Implementation of Inductive Coordination Mitigation Techniques and Applications
This standard provides guidance for controlling or modifying the inductive environment and the susceptibility of affected wire line telecommunications facilities in order to operate within the acceptable levels of steady-state or surge induced voltages of the environmental interface (probe wire) defined by IEEE Std 776-1992. Procedures for determining the source of the problem are given. Mitigation theory and philosophy are discussed, and mitigation devices are described. The application of typical mitigation apparatus and techniques and installation, maintenance, and inspection of mitigation apparatus are addressed. Advice for determining the best engineering solution is offered, and general safety considerations are discussed.		
IEEE	Std 1346™-1998	IEEE Recommended Practice For Evaluating Electric Power System Compatibility with Electronic Process Equipment
This document recommends a standard methodology for the technical and economic analysis for compatibility of process equipment with the electric power system. Standardization of terms, data, and performance of power systems and equipment compatibility promote a common frame of reference.		
IEEE	Std C62.31™-1987	IEEE Standard Test Specifications for Gas-Tube Surge Protective Devices
This standard applies to gas-tube SPDs for application on systems with voltages equal to or less than 1000 V rms or 1200 V dc. These protective devices are designed to limit voltage surges on balanced or unbalanced communication circuits and on power circuits operating from dc to 420 Hz. This standard contains a series of standard test criteria for determining the electrical characteristics of these gas-tube SPDs.		
IEEE	Std C62.32™-2004	IEEE Standard Test Methods for Low-Voltage Air Gap Surge Protective Device Components (Excluding Valve and Expulsion Types)

Copyright © 2006 IEEE. All rights reserved.

This standard applies to air gaps for overvoltage protection applications on systems with operating voltages equal to or less than 600 V rms. These protective devices are designed for limiting the voltages on balanced or unbalanced communication and signaling circuits. This standard contains a series of standard tests for determining the electrical characteristics of these air gap devices.		
IEEE	Std C62.33™-1982	IEEE Standard Test Specifications for Varistor Surge Protective Devices
This standard applies to varistors for surge protective applications on systems with dc to 420 Hz frequency and voltages equal to or less than 1000 V rms or 1200 V dc. This standard contains definitions, service conditions, and a series of test criteria for determining the electrical characteristics of these varistors.		
IEEE	Std C62.34™-1996 (R2001)	IEEE Standard for Performance of Low-Voltage Surge Protective Devices (Secondary Arresters)
This standard applies to SPDs designed for application on the low-voltage ac supply mains (1000 V rms and less, frequency between 48 Hz and 62 Hz). Low-voltage SPDs (secondary arresters) are intended to be connected at locations between, and including, the secondary terminals of the distribution transformer and the main service entrance panel.		
IEEE	Std C62.35™-1987	IEEE Standard Test Specifications for Avalanche Junction Semiconductor Surge Protective Devices
This standard applies to a two terminal avalanche junction surge suppressor for surge protective application on systems with dc to 420 Hz frequency and voltages equal to or less than 1000 V rms or 1200 V dc. The avalanche junction surge suppressor is a semiconductor diode that can operate in either the forward or reverse direction of its V-I characteristic. This standard contains definitions, service conditions, and a series of test criteria for determining the electrical characteristics of these semiconductor avalanche junction surge suppressors.		
IEEE	Std C62.36™-2000	IEEE Standard Test Methods for Surge Protectors Used in Low-Voltage Data, Communications, and Signaling Circuits
This standard describes the methods of testing and criteria for determining the end of life of electrical surge protectors used on multiconductor balanced or unbalanced low-voltage data, communications, and signaling circuits. The surge protectors covered are multiple-component series or parallel combinations of linear or nonlinear elements, packaged for the purpose of limiting voltage, current, or both.		
IEEE	Std C62.37™-1996	IEEE Standard Test Specification for Thyristor Diode Surge Protective Devices
This standard applies to two or three terminal, four or five layer, thyristor SPDs for application on systems with voltages equal to or less than 1000 V rms or 1200 V dc. These protective devices are designed to limit voltage surges on communication circuits and on power circuits operating from dc to 420 Hz. The thyristor SPD can be manufactured with unidirectional or bidirectional, symmetrical, or asymmetrical V-I characteristics. This standard contains definitions, service conditions, and a series of test criteria for determining the characteristics of a thyristor SPD.		
IEEE	Std C62.37.1™-2000	IEEE Guide for the Application of Thyristor Surge Protective Devices
This application guide applies to thyristor SPD components used in systems with voltages up to 1000 V rms or 1200 V dc. These components are designed to limit overvoltages and divert surge currents by voltage clamping and crowbarring (switching to a low impedance) actions. Telecommunication circuits are the main application of thyristor SPDs.		
IEEE	Std C62.41™-1991	IEEE Recommended Practice on Surge Voltages in Low-Voltage AC Power Circuits
The purpose of this recommended practice is to provide information on surge voltages in low-voltage ac power circuits. With this information, equipment designers and users can evaluate their operating environment to determine their need for SPDs. The document characterizes electrical distribution systems in which surges exist, based upon the data that have been recorded in interior locations on single-phase and three-phase residential, commercial, and industrial power distribution systems.		
IEEE	Std C62.41.1™-2002	IEEE Guide on the Surge Environment in Low-Voltage (1000 V and Less) AC Power Circuits

 Copyright © 2006 IEEE. All rights reserved.

This is a guide describing the surge voltage, surge current, and temporary overvoltages (TOV) environment in low-voltage (up to 1000 V rms) ac power circuits. This guide does not include other power disturbances, such as notches, sags, and noise.		
IEEE	Std C62.41.2™-2002	IEEE Recommended Practice on Characterization of Surges in Low-Voltage (1000 V and Less) AC Power Circuits
This recommended practice characterizes the surge environment at locations on ac power circuits described in IEEE Std C62.41.1-2002 by means of standardized waveforms and other stress parameters. The surges considered in this recommended practice do not exceed one half-cycle of the normal mains waveform (fundamental frequency) in duration. They can be periodic or random events and can appear in any combination of line, neutral, or grounding conductors. They include surges with amplitudes, durations, or rates of change sufficient to cause equipment damage or operational upset.		
IEEE	Std C62.42™-2002	IEEE Guide for the Application of Gas Tube and Air Gap Arrester Low-Voltage (Equal to or Less than 1000 V rms or 1200 V dc) Surge Protective Devices
This guide provides assistance in selecting the most appropriate type of device for a particular application and in evaluating the characteristics of devices to meet specific service requirements.		
IEEE	Std C62.43™-2005	IEEE Guide for the Application of Surge Protectors Used in Low-Voltage (Equal to or Less than 1000 V, rms, or 1200 V, DC) Data, Communications, and Signaling Circuits
This guide provides assistance in the selection of the most appropriate type of low-voltage data, communications, and/or signaling circuit surge protector for a particular application or set of conditions. Surge protector functions and characteristics are also explained and evaluated.		
IEEE	Std C62.45™-2002	IEEE Recommended Practice on Surge Testing for Equipment Connected to Low-Voltage (1000 V and Less) AC Power Circuits
This recommended practice covers surge testing of electrical and electronic equipment connected to low-voltage ac power circuits, specifically using the recommended test waveforms defined in IEEE Std C62.41.2-2002. These recommendations are generally applicable to any surge testing, regardless of the specific surges that may be applied		
IEEE	Std C62.48™-2005	IEEE Guide on Interactions Between Power System Disturbances and Surge Protective Devices
This guide describes the effects on SPDs of power system disturbances occurring in low-voltage ac power circuits. The disturbances are not limited to surges. The effects and side effects of the presence and operation of SPDs on the quality of power available to the connected loads are described. The interaction between multiple SPDs on the same circuit is also described.		
IEEE	Std C62.64™-1997	IEEE Standard Specifications for Surge Protectors Used in Low-Voltage Data, Communications, and Signaling Circuits
This standard applies to surge protectors for application on multiconductor and coaxial, balanced or unbalanced, data, communications, and signaling circuits with voltages less than or equal to 1000 V rms, or 1200 V dc. The standard provides performance criteria and tables of preferred values for performance based on characterization tests performed in accordance with IEEE Std C62.36-2000. The surge protectors covered are multiple-component series or parallel combinations of linear or nonlinear elements, packaged for the purpose of limiting voltage, current, or both.		
IEEE	PC62.72 (Draft 1, 1 November 2005) [B5]	IEEE Draft Guide for the Application of Surge Protective Devices for Low-Voltage (1000 V or Less) AC Power Circuits

Copyright © 2006 IEEE. All rights reserved.

This guide applies to SPDs that are manufactured for connections to 50 or 60 Hz ac power circuits that are rated between 100 V ac and 1000 V ac. This guide applies to SPDs that are specifically identified, labeled, or listed for connections on the load side of the service entrance main overcurrent protective device. This guide does not cover those SPDs identified, labeled, or tested as a secondary surge arrester intended for connections on the line side of the service entrance main overcurrent protective device. The SPDs covered in this guide are those manufactured for use in an association with electrical power distribution equipment, such as load centers, motor control centers, panelboards, switchboards, switchgear, and end-use equipment installed in commercial and industrial facilities. This guide excludes SPDs associated with retail and consumer appliances and components for residential use. This guide does not specify or set limits on insulation levels of any components associated with power distribution systems or end use equipment. In addition, it is not the intent of this guide to address individual SPD component specifications associated with any specific manufacturer of surge protection products. SPDs discussed in this guide contain at least one nonlinear component for either diverting surge currents or dissipating surge energy, or both. Examples of such nonlinear components are MOVs, SADs, spark gap tubes, or thyristors. Ferroresonators, motor-generators, UPSs, and filters containing only inductive or capacitive components are not considered SPDs in the guide.		
Information Technology Industry Council (ITI)[f] **1250 Eye Street NW, Suite 200, Washington, DC 20005, USA, tel. (202) 737-8888**		
ITI (formerly CBEMA)	Information Letter By Power Interface Subcommittee ESC-3 06/1993	Guidelines For Grounding Information Technology Equipment (ITE)
This information letter describes ITI's understanding of necessary guidelines for grounding power systems and equipment for ITE installations. It heavily depends on the NEC grounding and bonding requirements.		
International Telecommunications Union (ITU) – Telecommunication Standardization Sector[g] **States and Marketing Service** **Place de Nations, CH-1211, Geneva 20, Switzerland, tel. +41 22 730 6141** The ITU Telecommunication Standardization Sector (ITU-T) is a permanent organ of the International Telecommunication Union (formerly known as CCITT). The ITU-T is responsible for studying technical, operating, and tariff questions and issuing recommendations on them with a view to standardizing telecommunications on a worldwide basis. For U.S. and Canadian locations, see also ANSI T1 and TIA standards.		
ITU -T	Recommendation K.9 10/1996	Protection of telecommunication staff and plant against a large earth potential due to a neighboring electric traction line
ITU -T	Recommendation K.10 11/1996	Low-frequency interference due to unbalance about earth of telecommunication equipment
ITU -T	Recommendation K.12 02/2000	Characteristics of gas discharge tubes for the protection of telecommunications installations
This recommendation: a) gives the characteristics of gas discharge tubes used in accordance with Recommendation K.11 for protection of exchange equipment, telecommunication lines, and subscribers' or customer equipment against overvoltages; b) deals with gas discharge tubes having two or three electrodes; c) does not deal with mountings and their effect on tube characteristics—Characteristics given apply to gas discharge tubes by themselves mounted only in the ways described for the tests; d) does not deal with mechanical dimensions; e) does not deal with quality assurance requirements; and f) does not deal with gas discharge tubes that are connected in series with voltage-dependent resistors in order to limit follow-on currents in electrical power systems.		
ITU -T	Recommendation K.16 1988	Simplified calculation method for estimating the effect of magnetic induction from power lines on remote-fed repeaters in coaxial pair telecommunication systems

 Copyright © 2006 IEEE. All rights reserved.

The article mentioned in reference [1] contains a general treatise covering all possible cases of magnetic induction and permitting calculation of the location-dependent variation of the induced voltages and currents for full or partial exposure to induction of a route. This recommendation gives general information on how to find an equivalent circuit which permits rapid estimation of the maxima of the voltages and currents in cable conductors for any length and location of exposure. The lumped capacitances and the transfer impedance of the equivalent circuit must be appropriately chosen. Only two groups of parameters are required here, depending upon whether the length of the exposed section is shorter than, or equal to, or greater than half the length of the power-feeding section. The manner of switching from the complex formulae given in [1] to the simplified calculation is explained in Annex A. To check the usefulness of this universally applicable equivalent circuit, the maxima of the voltages and currents induced on the conductors of a cable when the outer conductors are at floating potential are calculated in Annex B for some of the exposure values evaluated numerically in the article previously mentioned. They are also entered in the diagrams. It will be seen that the calculation procedure shown in this Annex B gives sufficiently accurate results for practical purposes. Annex C shows how the equivalent circuit must be modified in cases where the outer conductors of the coaxial pairs are earthed at the terminals and at the repeater points. A similar calculation method for the effects of magnetic induction of power lines on telecommunication systems installed on coaxial pair cables whose outer conductor is insulated is described in the article mentioned in reference [2].		
ITU -T	Recommendation K.20 07/2003	Resistibility of telecommunication equipment installed in a telecommunications centre to overvoltages and overcurrents
This recommendation specifies resistibility requirements and test procedures for telecommunication equipment that is installed in a telecommunication center. Overvoltages or overcurrents covered by this recommendation include surges due to lightning on or near the line plant, short-term induction from adjacent ac power lines or railway systems, earth potential rise due to power faults, direct contacts between telecommunication lines and power lines and ESDs. The sources for overvoltages in internal lines, between equipment/racks, are mainly inductive coupling caused by lightning currents being conducted in nearby lightning strokes or lightning currents being conducted in nearby conductors. Major changes compared with the 2000 version of K.20 include: replacing the longitudinal test with a port-to-earth test, the introduction of an external port-to-port test, and adding the internal port requirements from K.41.		
ITU -T	Recommendation K.21 07/2003	Resistibility of telecommunication equipment installed in customer premises to overvoltages and overcurrents
This recommendation specifies resistibility requirements and test procedures for telecommunication equipment that is installed in or on a customer premises building. Overvoltages or overcurrents covered by this recommendation include surges due to lightning on or near the line plant, short-term induction from adjacent ac power lines or railway systems, earth potential rise due to power faults, direct contacts between telecommunication lines and power lines and ESDs. The sources for overvoltages in internal lines are mainly inductive coupling caused by lightning currents being conducted in nearby lightning strokes or lightning currents being conducted in nearby conductors. Major changes compared with the 2000 version of K.21 include: replacing the longitudinal test with a port-to-earth test, the introduction of an external port-to-port test, and adding internal port requirements.		
ITU -T	Recommendation K.24 11/1988	Method for measuring radio-frequency induced noise on telecommunications pairs
This recommendation is intended to standardize the method for measuring radio-frequency induced noise that may cause degradation of equipment performance and transmission quality. Standardization of the method for measuring induced noise makes possible the international standardization of the quality of the telecommunication system.		
ITU -T	Recommendation K.25 02/2000	Protection of optical-fibre cable
This recommendation provides a procedure to protect the telecommunication lines using fiber optics against direct lightning discharges to the line itself or to the structures that the line enters. The protection procedure is related to the exposure of the line to direct lightning discharges and includes the selection of cable characteristics/installation, use of shield wires, bonding/earthing of the cable shield, installation of SPDs and route redundancy.		
ITU -T	Recommendation K.26 11/1988	Protection of telecommunication lines against harmful effects from electric power and electrified railway lines.

Copyright © 2006 IEEE. All rights reserved.

ITU -T	Recommendation K.27 05/1996	Bonding configurations and earthing inside a telecommunications building
This recommendation: a) is a guide to bonding and earthing of telecommunication equipment in telephone exchanges and similar telecommunication switching centers; b) is intended to comply with safety requirements imposed by IEC or national standardizing bodies on ac power installations; c) can be used for installation of new telecommunication centers and, if possible, for expansion and replacement of systems in existing centers; d) treats coordination with external lightning protection, but does not provide details of protective measures specific to telecommunication buildings; e) addresses the shielding contribution of the effective elements of the building; f) addresses shielding provided by cabinets, cable trays, and cable shields; g) is intended to encourage EMC planning, which should include bonding and earthing arrangements that accommodate installation tests and routine diagnostics; h) does not include: required values of surge current immunity and insulation withstand voltages; limits of radiated and conducted electromagnetic emission or immunity; and techniques for verifying and maintaining bonding and earthing networks.		
ITU -T	Recommendation K.28 03/1993	Characteristics of semiconductor arrester assemblies for the protection of telecommunications installations
This recommendation applies to semiconductor-arrester assemblies to be used for primary protection against voltage surges due to lightning or power disturbances on telecommunications circuits, in accordance with K.11. It deals with semiconductor arrester assemblies of the type that limit voltages from line to earth to a few volts when conducting sufficient current to switch the device. It does not deal with: mountings for SAAs and their effect on arrester characteristics; semiconductor arresters that are connected in series with voltage-dependent resistors to limit follow-on currents in electrical power systems; mechanical dimensions; quality assurance requirements; and units containing heat coils.		
ITU -T	Recommendation K.29 01/1992	Coordinated protection schemes for telecommunication cables below ground
ITU-T	Recommendation K.31 03/1993	Bonding configurations and earthing of telecommunication installations inside a subscriber's building
This recommendation: a) is a guide to bonding and earthing of telecommunication equipment in residential and commercial subscribers' premises and is intended to comply with IEC or national standardizing bodies on ac power installations; b) is intended for use with new installations as well as for expansion and replacement of existing installations; c) is intended to encourage planning for EMC, which should include bonding and earthing arrangements that accommodate installation tests and diagnostics; d) does not necessarily provide protection for the installation in the case of a direct lightning stroke to the building; and e) is not intended to replace national regulations on bonding configurations and earthing. For required values of immunity to surge currents and ESDs, see K.21and K.22.Permissible levels of electromagnetic emissions are covered by CISPR or by national regulations. Concerning the need for overvoltage protectors, see K.11 and national regulations.		
ITU-T	Recommendation K.34 07/2003	Classification of electromagnetic environmental conditions for telecommunications equipment—Fast transient and radio-frequency phenomena
This recommendation defines classification of the fast transient and radio-frequency electromagnetic environmental conditions encountered where telecommunications equipment is installed. This recommendation applies to telecommunications equipment installed in telecommunication centers, outdoor locations, and customer premises. It does not make references to equipment dependent details.		
ITU -T	Recommendation K.35 05/1996	Bonding configurations and earthing at remote electronic sites

 Copyright © 2006 IEEE. All rights reserved.

This recommendation covers bonding configurations and earthing for equipment located at remote electronic sites such as switching or transmission huts, cabinets, or controlled environmental vaults with only one level, a need for ac mains power service, and a floor space of about 100 m^2 without antenna tower on the roof of the building as well as nearby; but that are more substantial than small electronic housings, such as carrier repeaters or distribution terminals. Experience in the operation of electronic equipment enclosures shows that the use of a bonding configuration and earthing that are coordinated with equipment capability and with electrical protection devices has the following attributes: promotes personnel safety and reduces fire hazards; enables signaling with earth return (functional earthing); minimizes service interruptions and equipment damage caused by lightning, exposures to power lines, and faults in internal dc power supplies; minimizes radiated and conducted emissions and susceptibility; and improves system tolerance to discharge of electrostatic energy. Within this framework, this recommendation: a) is a guide to bonding configurations and earthing of telecommunication equipment in electronic equipment enclosures; b) is intended to comply with safety requirements imposed by IEC or national standardizing bodies on ac power installations; c) is intended for installation of new electronic equipment enclosures; d) treats coordination with electrical protection devices, but does not provide details of protective measures specific to electronic equipment enclosures; e) utilizes the shielding contribution of effective elements of the structure and its contents; f) addresses the bonding of cable shields; g) is intended to facilitate EMC of telecommunications equipment; and h) does not include protection against LEMP (lightening electromagnetic pulse).		
ITU -T	Recommendation K.36 05/1996	Selection of protective devices
This recommendation gives guidance on the selection of protective components and assemblies in a telecommunication network. It deals with the protection of telecommunication equipment, subscriber's installations, and cable plants exposed to overvoltages and overcurrents due to lightning discharges or power faults. Interferences from discharges of static electricity (ESD) and EFTs are also considered as far as it may cause permanent damages to equipment.		
ITU-T	Recommendation K.38 10/1996	Radiated emission test procedure for physically large systems
This recommendation specifies the technical requirements for the radiated emission measurement procedure for physically large systems used within the public telecommunication network, with the exception of radio equipment. It applies to physically large systems that are comprised of equipments or systems requiring installation documentation specific for those sites at which they are to be installed. In order to demonstrate compliance of such systems, a minimum representative system is defined, which is used for compliance testing. Installations built from units of the complying minimum representative system are deemed to satisfy the radiated emission requirements. The minimum representative system is representative of installed systems in terms of function (which includes at least one of each functional unit type) and electromagnetic radiation characteristics. The minimum representative system is subsequently referred to in this recommendation as the equipment under test (EUT), to be used for compliance testing. Minimum representative systems shall be tested on an Open Area Test Site (OATS) or in a suitable chamber, the limits to be used are those as specified in CISPR 22.		
ITU -T	Recommendation K.39 10/1996	Risk assessment of damages to telecommunication sites due to lightning discharges
This recommendation gives support to protection engineers in evaluating the risk for severe damages caused by lightning. It comprises a risk analysis that includes the effect from direct and nearby lightning strikes as well as overvoltages originating from incoming services, mainly power and communication networks. The analysis also indicates the most efficient additional protective measures for sites with insufficient basic protection. Part of this recommendation deals with the risk of injuries to people being present at the site during thunderstorms. This recommendation is based on a concept from IEC TC 81 and modified to be applicable to practical cases in telecommunication systems. The example in Appendix I [of K.39] applies to a telecommunication site with an adjacent antenna mast.		
ITU -T	Recommendation K.43 07/2003	Immunity requirements for telecommunication equipment
This recommendation describes the generic immunity requirements for telecommunication equipment in a given environment. It does not cover the resistibility of equipment. Specific product family recommendations supersede this recommendation.		
ITU -T	Recommendation K.44 07/2003	Resistibility tests for telecommunication equipment exposed to overvoltages and overcurrents—Basic recommendation

Copyright © 2006 IEEE. All rights reserved.

This recommendation seeks to establish fundamental testing methods and criteria for the resistibility of telecommunication equipment to overvoltages and overcurrents. Overvoltages or overcurrents covered by this recommendation include surges due to lightning on or near the line plant, short-term induction of alternating voltages from adjacent electric power lines or electrified railway systems, earth potential rise due to power faults, and direct contacts between telecommunication lines and power lines. Major changes compared with the 2000 version of K.44 include replacing the longitudinal test with a port to earth test, the introduction of an external port to external port test, and adding internal port requirements.		
ITU -T	Recommendation K.45 07/2003	Resistibility of telecommunication equipment installed in the access and trunk networks to overvoltages and overcurrents
This recommendation specifies resistibility requirements and test procedures for telecommunication equipment installed between telecommunication centers and between a telecommunication center and customer's premises building. Overvoltages or overcurrents covered by this recommendation include surges due to lightning on or near the line plant, short-term induction from adjacent ac power lines or railway systems, earth potential rise due to power faults, direct contacts between telecommunication lines and power lines and ESDs. Major changes compared with the 2000 version of K.45 include replacing the longitudinal test with a port-to-earth test and the introduction of an external port-to-port test.		
ITU -T	Recommendation K.46 07/2003	Protection of telecommunication lines using metallic symmetric conductors against indirect lightning-induced surges
This recommendation gives a procedure in order to protect telecommunication lines using metallic conductors against direct lightning discharges to the line itself or to structures that the line enters. The protection procedure is related to the exposure of the line to direct lightning discharges and includes the selection of cable characteristics/ installation, bonding/earthing of the cable shield, use of shield wires, installation of SPDs, and route redundancy.		
ITU -T	Recommendation K.47 12/2000	Protection of telecommunication lines using metallic conductors against direct lightning discharges
This recommendation gives a procedure in order to protect telecommunication lines using metallic conductors against direct lightning discharges to the line itself or to structures that the line enters. The protection procedure is related to the exposure of the line to direct lightning discharges and includes the selection of cable characteristics/ installation, bonding/earthing of the cable shield, use of shield wires, installation of SPDs, and route redundancy.		
ITU -T	Recommendation K.48 12/2000	EMC requirements for each telecommunication equipment—Product family recommendation
This recommendation specifies the emission and immunity requirements for switching, transmission, power, digital mobile base station, wireless LAN, digital radio relay system, and supervisory equipment. It also describes operational conditions for emission and immunity testing. Performance criteria for immunity tests are also specified.		
ITU -T	Recommendation K.50 02/2000	Safe limits of operating voltages and currents for telecommunication systems powered over the network
This recommendation provides guidance on voltages and currents that may safely be used to power telecommunication systems that are part of the network. These systems use the paired-conductor cables of the network or specific power feeding cables to provide power to equipment at remote locations. This equipment and the current carrying conductors can be accessed in the energized state by service personnel without using insulated gloves or tools. These systems are not intended to be part of the subscriber's installation and are not accessible to users of the network. They are located in the networks between different telecommunication centers and between a telecommunication center and public network interfaces. This recommendation covers only systems that use continuous dc powering.		
ITU -T	Recommendation K.51 02/2000	Safe criteria for telecommunications equipment series K: Protection against interference
This recommendation provides guidance on safety criteria for telecommunication network infrastructure equipment. It specifies requirements intended to reduce risks of fire, electric shock or injury for the operator, layman, and service personnel who may come into contact with the equipment. This recommendation refers to IEC 60950:1999 and provides additional requirements when these are not covered by IEC 60950. Equipment complying with the relevant requirements in this recommendation is considered suitable for use in a telecommunication network. However, this recommendation does not include requirements for performance or functional characteristics of equipment.		

 Copyright © 2006 IEEE. All rights reserved.

ITU -T	Recommendation K.53 02/2000	Values of induced voltages on telecommunication installations to establish telecom and ac power and railway operators responsibilities
This recommendation gives permissible voltages on a telecommunications line caused by influence from a nearby ac power or railway plant during normal operation and fault condition. These values set the maximum permissible voltages and durations that ac power and railway operators are allowed to cause by any type of electromagnetic coupling on a telecommunications line without being responsible for mitigation measures.		
ITU-T	Recommendation K.56 07/2003	Protection of radio base stations against lightning discharges
This recommendation addresses the radio base station (RBS) made up of a shelter or small building to house the equipment and a nearby tower to hold the antennas, in such way that the tower will prevent lightning from hitting the shelter or small building. The purpose of this recommendation is to give criteria for the definition of procedures in order to protect the RBS against lightning discharges.		
ITU -T	Recommendation K.58 2003	EMC resistibility and safety requirements and procedures for co-located telecommunication installations
With the liberalization of telecommunications, many services are provided by several operators on the same cable, and equipment owned by different operators is installed in the same telecommunication facilities; in many cases these are interconnected with each other. Therefore, there is a possibility of trouble related to EMC, resistibility, and safety occurring. This recommendation describes necessary steps to ensure safe and problem-free operation in multiple operator environments. Co-location arising from telecommunication liberalization should be taken into account, and necessary subjects are described from the viewpoints of EMC, resistibility, and safety.		
ITU-T	Recommendation K.59 07/2003	Protection of customer premises from overvoltages
With the liberalization of telecommunications, operators, who are not the owner of the cable, may use several pairs from cable for different services. There is a possibility of EMC, resistibility and safety problems occurring in the cable. This recommendation aims to establish minimum requirements and procedures to ensure safe and problem-free operation and management related to EMC, resistibility, and safety for unbundling.		
ITU-T	Recommendation K.66 12/2004	Protection of customer premises from overvoltages
This recommendation: a) provides recommendations for bonding and earthing of telecommunication equipment in residential and commercial customer premises; b) refers to ITU-T K.21 for equipment resistibility requirements; c) recommends earthing and bonding requirements to coordinate with the resistibility requirements of ITU-T K.21 and the safety requirements of IEC 60950-1:2001; d) recommends the installation practices for bonding of all services and the installation of SPDs; e) illustrates problems associated with earthing and bonding and provides solutions for these earthing and bonding problems, including methods to improve the earthing and bonding; methods of providing additional protection external to the equipment; special resistibility and safety requirements; f) recommends responsibilities for protection at customer premises; and g) refers to draft IEC 62305-3 for protection against direct lightning.		
National Fire Protection Association (NFPA)[h] **1 Batterymarch Park, Quincy, MA 02269-7471, USA, tel. (617) 770 3000** Established in 1896, the NFPA serves as the world's leading advocate of fire prevention and is an authoritative source on public safety. In fact, the NFPA's 300 codes and standards influence every building, process, service, design, and installation in the U.S., as well as many of those used in other countries. NFPA's focus on true consensus has helped the association's code-development process earn accreditation from ANSI. The NFPA is the nation's public advocate for fire safety. Since lightning and electrical power are potentially sources of fire, the NFPA prepares and distributes codes on lightning protection and electrical safety to reduce the risk of fire and electrical shock.		
NFPA	70	National Electrical Code (NEC)

Copyright © 2006 IEEE. All rights reserved.

This Code covers the installation of electrical conductors, equipment, and raceways; signaling and communications conductors, equipment, and raceways; and optical-fiber cables and raceways for the following: (1) public and private premises, including buildings, structures, mobile homes, recreational vehicles, and floating buildings; (2) yards, lots, parking lots, carnivals, and industrial substations FPN to (2)—For additional information concerning such installations in an industrial or multibuilding complex, see the NESC; (3) installations of conductors and equipment that connect to the supply of electricity; (4) installations used by the electric utility, such as office buildings, warehouses, garages, machine shops, and recreational buildings, that are not an integral part of a generating plant, substation, or control center. This Code does not cover the following: (1) installations in ships, watercraft other than floating buildings, railway rolling stock, aircraft, or automotive vehicles other than mobile homes and recreational vehicles; (2) installations underground in mines and self-propelled mobile surface mining machinery and its attendant electrical trailing cable; (3) installations of railways for generation, transformation, transmission, or distribution of power used exclusively for operation of rolling stock or installations used exclusively for signaling and communications purposes; (4) installations of communications equipment under the exclusive control of communications utilities located outdoors or in building spaces used exclusively for such installations; (5) installations under the exclusive control of an electric utility where such installations: a) consist of service drops or service laterals, and associated metering, or b) are located in legally established easements, rights-of-way, or by other agreements either designated by or recognized by public service commissions, utility commissions, or other regulatory agencies having jurisdiction for such installations, or c) are on property owned or leased by the electric utility for the purpose of communications, metering, generation, control, transformation, transmission, or distribution of electric energy. Examples of utilities may include those entities that are typically designated or recognized by governmental law or regulation by public service/utility commissions and that install, operate, and maintain electric supply (such as generation, transmission, or distribution systems) or communication systems (such as telephone, CATV, Internet, satellite, or data services). Utilities may be subject to compliance with codes and standards covering their regulated activities as adopted under governmental law or regulation. Additional information can be found through consultation with the appropriate governmental bodies, such as state regulatory commissions, Federal Energy Regulatory Commission, and Federal Communications Commission (FCC). The authority having jurisdiction for enforcing this Code may grant exception for the installation of conductors and equipment that are not under the exclusive control of the electric utilities and are used to connect the electric utility supply system to the service entrance conductors of the premises served, provided such installations are outside a building or terminate immediately inside a building wall A companion reference is the code-plus-commentary, the National Electrical Code® Handbook. (NFPA 70), 2005 Edition. NEC Chapter 8, Communications Circuits, covers general requirements for grounding, bonding, and protecting low-voltage telecommunications circuits. Chapter 8 is a stand-alone chapter but does reference other articles and sections such as Article 250 on grounding. NEC Article 250, Grounding, covers, where included in the scope of the Code, the grounding and bonding of ac and dc power circuits of less than 600 V. (Higher voltages such as 1000 V and above are also addressed but are atypical for the commercial building.) It is important to be familiar with these requirements, since they must be coordinated with the (tele)communications circuits electrical protection, and grounding and bonding covered in Chapter 8. The same level of familiarity is important for lower voltage electrical systems, such as in computer rooms, fire-alarm circuits, signaling, and security. See also Articles 645, 647, 725, 760, 770, 810, 820, and 830 of the NEC. NEC Article 280, Surge Arresters, covers the general, installation, and connection requirements for surge arresters installed on premises wiring systems. NEC Article 285, Transient Voltage Surge Suppressors (SPDs), covers the general, installation, and connection requirements for surge arresters installed on premises wiring systems. NEC Article 645, Information Technology Equipment, covers equipment, power supply wiring, equipment interconnecting wiring, and grounding of ITE, including terminal units, in an ITE room. See also NFPA 75. NEC Article 647, Sensitive Electronic Equipment, covers installation and wiring of separately derived systems operating at 120 V line-to-line and 60 V to ground for sensitive electronic equipment.		
NFPA	70B	Recommended Practice for Electrical Equipment Maintenance
This recommended practice applies to preventive maintenance for electrical, electronic, and communication systems and equipment and is not intended to duplicate or supersede instructions that manufacturers normally provide. Systems and equipment covered are typical of those installed in industrial plants, institutional and commercial buildings, and large multifamily residential complexes. Consumer appliances and equipment intended primarily for use in the home are not included.		
NFPA	75	Standard for the Protection of Information Technology Equipment
This standard covers the requirements for the protection of ITE and ITE areas.		

 Copyright © 2006 IEEE. All rights reserved.

NFPA	780	Standard for the Installation of Lightning Protection Systems
This document covers traditional LPS installation requirements for the following: (1) ordinary structures; (2) miscellaneous structures and special occupancies; (3) heavy-duty stacks; (4) watercraft; (5) structures containing flammable vapors, flammable gases, or liquids that give off flammable vapors. This document does not cover LPS installation requirements for the following: (1) explosives manufacturing buildings and magazines; (2) electric generating, transmission, and distribution systems. This document shall not cover LPS installation requirements for early streamer emission systems or charge dissipation systems.		
Telcordia Technologies[i] **One Telcordia Drive, Piscataway, NJ 08854-4157, USA, tel. (732) 699-2000** Telcordia (formerly Bellcore) develops numerous generic requirements on a wide range of subjects necessary for the operation, development, and reliability of telecommunications equipment. Many of these generic requirements are the most exacting and demanding within the industry and are widely used for the (public) telecommunications network.		
Telcordia	GR-63-CORE Issue 2, 04/2002	NEBS™ Requirements: Physical Protection
This document identifies the minimum spatial and environmental criteria for all new telecommunications equipment systems used in a telecommunications network. Compliance demonstrates the equipment has been thoroughly tested for safety and functional criteria for use in telecommunications networks. Pioneered by Telcordia, these rigorous standards have been the de facto benchmarks for the industry for more than two decades. They have been used to verify that products are truly carrier-class, installation-ready, and equipment compatible.		
Telcordia	GR-295-CORE Issue 1, 11/2004	Isolated and Mesh Bonding Networks: Definition and Application to Telephone Central Offices
Document includes the fundamental bonding methods (and their variations) for network telecommunications equipment. These methods are IBN and mesh-BN. New criteria have been added for implementation of mesh-BNs and additional criteria has been introduced for mesh-IBN. Revisions have been added to existing criteria describing implementation of IBNs. Promotes safety of central office personnel, and gives equipment manufactures and service providers a set of common rules for bonding and grounding. Improves the ability of equipment to withstand lightning surges and provides immunity to various types of electromagnetic disturbances. Reduces EMI to and from the equipment and reduces maintenance costs for service providers. Enables compatibility with new high, bit-rate services. Increases flexibility of manufacturers in selecting appropriate bonding networks for their equipment and may ease providing the equipment to the world market.		
Telcordia	GR-487-CORE Issue 2, 03/2000	Generic Requirements for Electronic Equipment Cabinets
The stated requirements are intended to provide a suitable environment for telephone company electronic and broadband equipment that is housed in aboveground cabinets, typically pad- or pole-mounted, in an OSP environment. The equipment housed in these cabinets is accessible to the craftsperson through surface-mounted doors. This document incorporates broadband cabinet requirements into a single document. For the present purposes, broadband equipment is considered to be capable of providing subscriber services at very high frequencies or bit rates, typically delivered over coaxial or fiber media. This document also includes additional requirements for the splicing compartment, which may serve coaxial or fiber media, as well as requirements for a permanent engine-generator.		
Telcordia	GR-513-CORE Issue 1, 01/1995	LSSGR: Power, Section 13
This document provides the view of Telcordia on generic requirements for the power systems environment in which the stored program control switching system (SPCS) operates. Items identified as requirements are necessary to help ensure mutual compatibility between the power systems and the served equipment. Items identified as objectives are desirable attributes or design goals that provide one or more of the following advantages: flexibility, simplified interfaces, increased against improper operation, improved reliability, etc.		
Telcordia	GR-974-CORE Issue 3, 06/2002	Generic Requirements for Telecommunications Line Protector Units (TLPUS)

Copyright © 2006 IEEE. All rights reserved.

This document proposes generic requirements that a TLPU shall meet in order to avoid interference with the operation of telecommunications networks and also to provide surge limiting that is compatible with telecommunications networks. This GR contains criteria that are suitable to specific network applications (e.g., telephony, T1-carriers, high-speed digital networks). This document provides the user four different voltage-limiting options to select: 5-ESS voltage limiting, low-voltage limiting, medium-voltage limiting, and high-voltage limiting. TLPUs installed in their protector mounting are intended to prevent unwanted surge voltages and currents on the OSP from reaching terminal equipment used in telecommunications networks. These unwanted surges may arise, for example, from effects of lightning or power line faults. TLPUs may contain solid-state arresters, gas-tube arresters, or a hybrid combination of gas-tube and solid-state components or other technologies. The TLPU is intended to be used at central offices and customer stations, and on carrier systems. The TLPU has the capability of providing voltage-only or combined voltage- and current-limiting features. Therefore, the TLPUs consist of voltage-limiting devices from tip-to-ground and ring-to-ground, and they may also contain a current-limiting device on each conductor (tip and ring) between the voltage-limiting device and the protected load.		
Telcordia	GR-1089-CORE Issue 3, 10/2002	Electromagnetic Compatibility and Electrical Safety—Generic Criteria for Network Telecommunication Equipment
This document presents the Telcordia and participating industry representative's view of proposed generic criteria covering EMC and electrical safety necessary for equipment to perform reliably and safely in a network environment of a typical TSP. It places in a single reference document, EMC and electrical safety criteria for equipment used at central offices; equipment placed in the OSP at such locations as controlled environmental vaults, electronic equipment enclosures, and huts; equipment located in uncontrolled structures, such as cabinets; and network equipment located at the customer premises. Telecommunications equipment, by nature of its application in the telecommunications network, may be exposed to one or more sources of electromagnetic energy. The system-level generic criteria for EMC are intended to help avoid equipment damage and malfunction because of lightning, 60 Hz commercial power fault conditions, ESD, EFT, EMI, operation in the presence of a dc potential difference, and operation in a steady-state induced voltage environment. This document also presents other criteria intended to help establish that equipment will not become a fire or electrical safety hazard in the presence of severe lightning or 60 Hz commercial power fault conditions. Safe voltage levels for intentionally applied sources, electrochemical corrosion effects, and grounding are considered as well.		
Telcordia	GR-1361-CORE Issue 1, 09/1998	Generic Requirements for Gas Tube Protector Units (GTPUs)
GTPUs are intended to prevent unwanted surge voltages and currents on the OSP from reaching terminal equipment used in telecommunications networks. This document describes the criteria for GTPUs intended for use on paired conductors at central offices (COs) and customer stations, by carrier systems, and on the vertical side of the main-distributed frame in a CO building. Special electrical requirements necessary to protect certain 5-ESS line cards are also included in this document. The GTPU has the capability of providing voltage-limiting only or combined voltage- and current-limiting features. This GR covers GTPUs having back-up devices that are air gaps or solid-state components, such as thyristor diodes, avalanche diodes, or MOVs. This GR addresses generic requirements that a GTPU shall have in order to help interference with the operation of telecommunications networks and to help provide surge limiting that is compatible with telecommunications networks.		
Telcordia	TR-NWT-001011 Issue 1, 02/1992	Generic Requirements for Surge Protective Devices (SPDs) On AC Power Circuits
This Technical Reference (TR) covers generic requirements for SPDs on ac power circuits that in the view of Telcordia are needed for proper service and maintenance performance. The SPDs are intended for indoor use at the service entrance location, installed on the load side of the ac power service disconnect, operating at rated voltages of 600 V rms or less, for single-phase or three-phase systems.		
Telcordia	GR-3108 Issue 1, 07/2004	Generic Requirements for Network Equipment in the Outside Plant (OSP)
This document defines the operating environments for the OSP and provides the functional requirements and criteria for each category of classes. Functional performance criteria covered in this document include, among others: mechanical and engineering requirements; thermal exposure and heat management; and electrical protection and environmental requirements.		
Telcordia	GR-513 Issue 2 09/1995	LSSGR: Power, Section 13

 Copyright © 2006 IEEE. All rights reserved.

This document provides generic requirements for the power systems environment in which the SPCS operates. Items identified as requirements are necessary to help ensure mutual compatibility between the power systems and the served equipment. Items identified as objectives are desirable attributes or design goals that provide one or more of the following advantages: flexibility, simplified interfaces, increased against improper operation, improved reliability, etc.		
Telcordia	CORE Issue 2 04/2002	NEBS™ Requirements: Physical Protection
This document identifies the minimum spatial and environmental criteria for all new telecommunications equipment systems used in a telecommunications network. Topics covered in this GR include temperature and humidity; fire resistance; spatial and vibration criteria; airborne contaminants; acoustic noise; and illumination.		
Telecommunications Industry Association (TIA)[j] **2500 Wilson Boulevard, Suite 300, Arlington, VA 22201, USA, tel. (703) 907-7704** The TIA, among other services, provides documents on telecommunications. Primary membership is from equipment manufacturers (similar to ITI). Standards committee TR41 and TR42 deal with telephone terminals and other related subjects.		
TIA	222-G-2005	Structural Standards for Steel Antenna Towers and Antenna Supporting Structures
The objective of this document is to provide minimum criteria for specifying and designing steel antenna towers and antenna supporting structures. This standard is not intended to supersede applicable codes. The information contained in this standard was obtained from sources as referenced and noted therein and represents, in the judgement of the subcommittee, the accepted industry practices for minimum standards for the design of steel antenna supporting structures. This document contains a county-by-county listing of minimum basic wind speeds, as well as a commentary on ice and other design criteria. It is for general information only.		
TIA	568-B.1-2001	Commercial Building Telecommunications Cabling Standard—Part 1: General Requirements
This document specifies a generic telecommunications cabling system for commercial buildings that will support a multiproduct, multivendor environment.		
TIA	569-B-2004	Commercial Building Standard for Telecommunications Pathways and Spaces
This document encompasses telecommunications considerations both within and between buildings. The aspects covered are the pathways into which telecommunications media are placed and the rooms and areas associated with the building used to terminate media and install telecommunications equipment.		
TIA	569-B-1.5-2004	Commercial Building Telecommunications Cabling Standard—Part 1: General Requirements—Addendum 5: Telecommunications Cabling for Telecommunications Enclosures
The purpose of this addendum is to complement the recognition of telecommunications enclosures (TEs) in TIA 569-B by providing cabling requirements on when and where to use this space.		
TIA	PN-3-3283-RV2	Environmental Considerations
This document establishes environmental conditions that should be addressed in the design of telecommunications user premises equipment for interfacing and connecting with the various elements of the public telephone network. It defines physical, electrical, and mechanical conditions to which the equipment may be exposed. This draft to become TIA 571-B and is scheduled for publication in 2006.		
TIA	606-A	Administration Standard for Commercial Telecommunications Infrastructure
This document provides the user with guidelines and choices of classes of administration for maintaining telecommunications infrastructure.		
TIA	758-A	Customer-Owned Outside Plant Telecommunications Infrastructure Standard

Copyright © 2006 IEEE. All rights reserved.

The purpose of this standard is to provide requirements used in the design of the telecommunication pathways and spaces, and the cabling installed between buildings or points in a customer-owned campus environment. Customer-owned campus facilities are typically termed "outside plant" (OSP). For the purpose of this standard, they are termed, customer-owned OSP.		
TIA	942-2005	Telecom Infrastructure Standard for Data Centers
This standard specifies the minimum requirements for telecommunications infrastructure of data centers and computer rooms, including single-tenant enterprise data centers and multitenant hosting data centers. The topology is intended to be scalable to any size data center.		
TIA	968-A-2002	Telecommunications—Telephone Terminal Equipment—Technical Requirements for Connection of Terminal Equipment to the Telephone Network
This standard specifies technical criteria for terminal equipment approved in accordance with CFR Title 47, Part 68, for direct connection to the public switched telephone network		
T1A/EIA	ANSI J-STD-607-A	Commercial Building Grounding (Earthing) and Bonding Requirements for Telecommunications
The purpose of this standard is to enable the planning, design, and installation of telecommunications grounding and bonding systems that will subsequently be installed. This standard also provides recommendations for grounding and bonding of customer owned towers and antennas. This telecommunications grounding and bonding infrastructure supports a multivendor, multiproduct environment as well as various system installation practices.		
Underwriters Laboratories Inc. (UL)[k] **Customer Service** **333 Pfingsten Road, Northbrook, IL 60062-2096, USA, tel. (877) 854-3577** UL operates laboratories for the examination and testing of devices, systems, and materials to determine their suitability regarding protection from hazard to life and property. UL also publishes standards, classifications, and specifications for materials, devices, products, equipment, constructions, methods, and systems affecting such hazards. UL is an NRTL and tests products for safety according to their intended application or purpose.		
UL	UL 96, Edition 5 O5/2005	Standard for Lightning Protection Components
These requirements cover lightning protection components for use in the installation of complete systems of lightning protection on buildings and structures. These requirements do not cover the installation of lightning protection components. Products of this type are covered by UL 96A-2001. Lightning protection components are divided into three classes, according to their intended application as defined in 4.3–4.5: Class 1 components are for buildings and structures not more than 23 m (75 ft) high; Class 2 components are for buildings and structures more than 23 m (75 ft) high; Class 2 modified components are for use on heavy-duty stacks.		
UL	UL 96A, Edition 11 07/2001	Standard for Installation Requirements For Lightning Protection Systems
These requirements cover the installation of LPSs on all types of structures other than structures used for the production, handling, or storage of ammunition, explosives, flammable liquids or gases, and explosive ingredients. These requirements apply to LPSs that are complete and cover all parts of a structure. Partial systems are not covered by this standard. These requirements do not cover the installation of LPSs for electrical generating, distribution, or transmission systems. These requirements do not cover lightning protection components, which are covered by UL 96-2005. A product that contains features, characteristics, components, materials, or systems new or different from those covered by the requirements in this standard and that involves a risk of fire or of electric shock or injury to persons shall be evaluated using appropriate additional component and end-product requirements to maintain the level of safety as originally anticipated by the intent of this standard. A product whose features, characteristics, components, materials, or systems conflict with specific requirements or provisions of this standard does not comply with this standard. Revision of requirements shall be proposed and adopted in conformance with the methods employed for development, revision, and implementation of this standard.		
UL	UL 467, Edition 8 09/2004	Standard for Grounding and Bonding Equipment

 Copyright © 2006 IEEE. All rights reserved.

These requirements cover grounding and bonding equipment for use in connection with interior wiring systems in accordance with the NEC. These requirements also cover hospital grounding jacks and the mating grounding cord assemblies. These requirements cover ground clamps, bonding devices, ground mesh, grounding and bonding bushings, water meter shunts, armored grounding wire, ground rods, and the like.		
UL	UL 497, Edition 7 2001	Standard for Protectors for Paired-Conductor Communications Circuits
These requirements cover protectors for paired-conductor communications circuits to be used in accordance with Article 800 of the NEC. As covered by these requirements, a communications circuit protector consists of single- and multiple-pair air gap arresters, gas-tube arresters, or solid-state arresters, with or without fuses or other voltage-limiting devices. A circuit protector is intended to protect equipment, wiring, and personnel against the effects of excessive potentials and currents in telephone lines caused by lightning, contacts with power conductors, power induction, and rises in ground potential. This standard does not cover the following: a) lightning protective devices for the protection of secondary distribution wiring systems and equipment; b) antenna discharge units for radio- and television-receiving appliances; c) lightning conductor and air terminals for connection of lightning rods for building protection; d) protectors for fire-alarm signaling circuits that are covered by UL 497B-2004, UL 497A-2001, and UL 1449-1996. A product that contains features, characteristics, components, materials, or systems new or different from those covered by the requirements in this standard and that involves a risk of fire or of electric shock or injury to persons shall be evaluated using appropriate additional component and end-product requirements to maintain the level of safety as originally anticipated by the intent of this standard. A product whose features, characteristics, components, materials, or systems conflict with specific requirements or provisions of this standard does not comply with this standard. Revision of requirements shall be proposed and adopted in conformance with the methods employed for development, revision, and implementation of this standard.		
UL	UL 497A, Edition 3 2001	Standard for Secondary Protectors for Communications Circuits
These requirements cover secondary protectors for use in single- or multiple-pair-type communications circuits that are intended to be installed in accordance with Article 800 of the NEC. Secondary protectors are intended to be used in the protected side of telecommunications networks that have an operating rms voltage to ground less than 150 V and installed or used in accordance with the NEC. These requirements do not cover telephone protectors that are covered by UL 497-2001. These requirements do not cover telephone equipment such as telephone answering devices, residential telephone instruments, telephone dialers, cordless telephones, key systems, and private-branch exchange equipment that is covered by UL 1459-1995. These requirements do not cover cellular telephones or other receiver/transmitter-type devices. Equipment of this type is covered by UL 1270-1997. These requirements may be used, directly or by reference, to investigate portions of other equipment not classified as telecommunications equipment accessories and that may be connected to a telecommunications network, insofar as they may be applicable to such equipment. These requirements do not cover wires and cables intended to be permanently installed in a building in accordance with Article 800 of the NEC. A product that contains features, characteristics, components, materials, or systems new or different from those covered by the requirements in this standard and that involves a risk of fire or of electric shock or injury to persons shall be evaluated using appropriate additional component and end-product requirements to maintain the level of safety as originally anticipated by the intent of this standard. A product whose features, characteristics, components, materials, or systems conflict with specific requirements or provisions of this standard does not comply with this standard. Revision of requirements shall be proposed and adopted in conformance with the methods employed for development, revision, and implementation of this standard.		
UL	UL 497B, Edition 4 06/2004	Standard for Protectors for Data Communications and Fire-Alarm Circuits
These requirements cover protectors for data communications and fire-alarm circuits. As covered by these requirements, data communications circuit protectors and fire-alarm circuit protectors consist of single- and multiple-pair air-gap arresters, gas-tube arresters, or solid-state arresters, with or without fuses or other voltage-limiting devices. Data communications circuit protectors and fire-alarm circuit protectors are intended to protect equipment, wiring, and personnel against the effects of excessive potentials and currents caused by lightning in communications alarm-initiating or alarm-indicating loop circuits. This standard does not cover the following: a) lightning protective devices for the protection of primary distribution wiring systems and equipment such as ac branch circuit protection; b) antenna discharge units for radio- and television-receiving appliances; c) lightning conductor and air terminals for connection of lightning rods for building protection; d) protective devices to be used on telephone lines or telephone lines connecting to the telecommunication networks. A product that contains features, characteristics, components, materials, or systems new or different from those in use when the standard was developed and that involves a risk of fire, electric shock, or injury to persons shall be evaluated using the appropriate additional component and end-product requirements as determined necessary to maintain the level of safety for the user of the product as originally anticipated by the intent of this standard.		

Copyright © 2006 IEEE. All rights reserved.

UL	UL 497C, Edition 2 08/2001	Standard for Protectors for Coaxial Communications Circuits
These requirements cover protectors for use on coaxial cable circuits to be used in accordance with the applicable requirements of the NEC. As covered by these requirements, a coaxial cable circuit protector consists of single or multiple air-gap arresters, gas-tube arresters, or solid-state arresters, with or without fuses or other current-limiting devices. A circuit protector is intended to protect equipment, wiring, and personnel at the subscriber premises against the effects of excessive potentials and currents on the coaxial line caused by lightning, contacts with power conductors, power induction, or rises in ground potential. This standard does not cover the following: a) lightning protective devices for the protection of secondary distribution wiring systems and equipment; b) antenna discharge units for radio and television receiving appliances; c) lightning conductor and air terminals for connection of lightning rods for building protection; d) protectors for fire-alarm signaling circuits that are covered by UL 497B-2004, UL 497A-2001, UL 1449-1996, and UL 497-2001.		
UL	UL 1449, Edition 2 1996	Standard for Transient Voltage Surge Suppressors
These requirements cover transient voltage surge suppressors (SPD) intended for permanently connected, cord-connected, and direct plug-in applications, designed for repeated limiting of transient voltage surges as specified in the standard on 50 or 60 Hz power circuits not exceeding 600 V. Except as indicated in 1.3, the products covered by this standard are rated and intended for connection to circuits or supply sources having nominal voltage ratings as specified in Table 37.1. A product intended for connection to an ac circuit or supply source other than that specified in 1.2 may be examined and tested in accordance with the intent of the requirements in this standard and, if found to be substantially equivalent, may be judged to comply with this standard. These requirements cover cord-connected and direct plug-in SPD intended for indoor use and permanently connected SPD intended for indoor and outdoor use in accordance with the NEC and are intended for installation on the load side of the main overcurrent protection. These requirements do not cover the interconnection of multiple field installed SPD. These requirements cover SPD that may include components specifically intended to function as filters for conducted EMI or noise, in addition to limiting transient voltage surges. These requirements cover SPD employing circuit components intended to provide secondary protection for telephone communication circuits and circuit components intended to protect data communication or fire-alarm circuits. These requirements cover SPD employing antenna connections for audio-video products. A SPD that has a battery backup feature or other UPS equipment also must comply with the applicable requirements in UL 1778-2005. These requirements cover SPD/panelboard extension modules. These products also must comply with UL 67-1993. These requirements do not cover secondary surge arresters intended for use on the line side of the main overcurrent protection. These requirements do not evaluate the effect of SPD on connected loads, the effect of SPD on harmonic distortion of the supply voltage, the degree of attenuation provided by SPD, nor the adequacy of the suppressed voltage rating of SPD to protect specific connected equipment from upset or damage. This standard does not cover SPDs intended for use with medical equipment. Medical equipment is typically intended for use in general patient care areas or critical patient care areas as defined by Article 517 of the National Electrical Code for Health Care Facilities. SPDs intended for such use must comply with the requirements of UL 60601-1:2003 and IEC 60601-1-1:2000. An SPD intended to serve as an outlet cover plate or outlet box hood must comply with the requirement for faceplates in UL 514D-2000.		
UL	UL 1863, Edition 4 05/2004	Standard for Communications-Circuit Accessories
These requirements cover telecommunications-circuit accessories, such as jack and plug assemblies, quick-connect terminal assemblies, telephone wall plates, telephone extension cords, cross-connect terminal-block assemblies, maintenance terminal modules, terminal enclosures, cable-splice enclosures, network-interface devices, wire-guide assemblies, and connector boxes. These devices are intended to be used in telecommunications networks that have an operating root-mean-square (rms) voltage to ground less than 150 V and installed or used in accordance with the NEC. These requirements do not cover telephone equipment such as telephone answering devices, residential telephone instruments, telephone dialers, cordless phones, key systems, and PABX equipment that is covered by UL 60950-1:2003. Also, these requirements do not cover: a) telephone protectors that are covered by UL 497-2001 and UL 497A-2001. These requirements do not cover receiver/transmitter-type devices. Equipment of this type is covered by UL 1492-1996 or UL 6500-1999. These requirements do not cover cellular telephones or cellular devices. Equipment of this type is covered by UL 1492. These requirements may be used, directly or by reference, to investigate portions of other equipment, not classified as telecommunications-equipment accessories, that may be connected to a telecommunications network, insofar as they may be applicable to such equipment. These requirements do not cover wires and cables intended to be permanently installed in a building in accordance with Article 800 of the NEC.		
UL	UL 60950, Edition 3 12/2000	Safety of Information Technology Equipment

 Copyright © 2006 IEEE. All rights reserved.

This standard is applicable to mains-powered or battery-powered ITE, including electrical business equipment and associated equipment, with a rated voltage not exceeding 600 V and designed to be installed in accordance with the CAN/ CSA C22.1 and CSA C22.2 No. 0, and the NEC. The standard is also applicable to equipment, unless otherwise identified by a marking or instructions, designed to be installed in accordance with Article 645 of the NEC, and NFPA 75. See Annex NAE for examples of and references to regulatory requirements that may apply to this equipment. This standard is also applicable to such ITE designed and intended to be connected directly to a telecommunication network, regardless of the source of power. It is also applicable to such ITE designed to use the ac mains supply as a telecommunication transmission medium (see note 4 of clause 6). This standard specifies requirements intended to reduce risks of fire, electric shock, or injury for the operator and layman who may come into contact with the equipment and, where specifically stated, for service personnel. This standard is intended to reduce such risks with respect to installed equipment, whether it consists of a system of interconnected units or independent units, subject to installing, operating, and maintaining the equipment in the manner prescribed by the manufacturer. Equipment complying with the relevant requirements in this standard is considered suitable for use with process control equipment, automatic test equipment, and similar systems requiring information processing facilities. However, this standard does not include requirements for performance or functional characteristics of equipment. Requirements additional to those specified in this standard may be necessary for: equipment intended for operation in special environments, for example, extremes of temperature; excessive dust, moisture or vibration; flammable gases; and corrosive or explosive atmospheres; electromedical applications with physical connections to the patient; equipment intended to be used in vehicles, on board ships, or aircraft, in tropical countries, or at altitudes greater than 2000 m (6500 ft); equipment intended for use where ingress of water is possible; for guidance on such requirements and on relevant testing, see Annex T.

NOTE—Attention is drawn to the fact that authorities of some countries impose additional requirements. This standard does not apply to: support equipment, such as air conditioning, fire detection or fire extinguishing systems; power supply systems, such as motor-generator sets, battery back-up systems and transformers, which are not an integral part of the equipment; building installation wiring; devices requiring no electrical power.

UL	UL 60950-1, Edition 1 04/2003	Information Technology Equipment—Safety —Part 1: General Requirements

This standard is applicable to mains-powered or battery-powered ITE, including electrical business equipment and associated equipment, with a rated voltage not exceeding 600 V and designed to be installed in accordance with CAN/CSA C22.1 and CSA C22.2 No. 0, and the NEC. The standard is also applicable to equipment, unless otherwise identified by a marking or instructions, designed to be installed in accordance with Article 645 of the NEC and NFPA 75. See Annex NAE for examples of and references to regulatory requirements that may apply to this equipment. This standard is also applicable to such ITE designed for use as terminal equipment and telecommunication network infrastructure equipment, regardless of the source of power; designed and intended to be connected directly to, or used as infrastructure equipment in, a cable distribution system, regardless of the source of power; designed to use the ac mains supply as a communication transmission medium. This standard specifies requirements intended to reduce risks of fire, electric shock, or injury for the operator and layman who may come into contact with the equipment and, where specifically stated, for a service person. This standard is intended to reduce such risks with respect to installed equipment, whether it consists of a system of interconnected units or independent units, subject to installing, operating, and maintaining the equipment in the manner prescribed by the manufacturer.

NOTE 1—The requirements of IEC 60065:2001 may also be used to meet safety requirements for multimedia equipment. See IEC Guide 112, Guide on the safety of multimedia equipment. A list of informative references is given in Annex Q, Bibliography.This list is not intended to be comprehensive, and equipment that is not listed is not necessarily excluded from the scope. Equipment complying with the relevant requirements in this standard is considered suitable for use with process control equipment, automatic test equipment, and similar systems requiring information processing facilities. However, this standard does not include requirements for performance or functional characteristics of equipment. Requirements additional to those specified in this standard may be necessary for equipment intended for operation in special environments (for example, extremes of temperature; excessive dust, moisture, or vibration; flammable gases; and corrosive or explosive atmospheres); electromedical applications with physical connections to the patient; equipment intended to be used in vehicles, on board ships or aircraft, in tropical countries, or at altitudes greater than 2000 m (6500 ft); equipment intended for use where ingress of water is possible; for guidance on such requirements and on relevant testing, see Annex T.

NOTE 2—Attention is drawn to the fact that authorities of some countries impose additional requirements. This standard does not apply to: support equipment, such as air conditioning, fire detection or fire extinguishing systems; power supply systems that are not an integral part of the equipment, such as motor-generator sets, battery backup systems and transformers; building installation wiring; devices requiring no electric power.

Copyright © 2006 IEEE. All rights reserved.

UL	UL 60950-21, Edition 1 11/2003	Information Technology Equipment—Safety—Part 21: Remote Power Feeding
This part of IEC 60950:2001 applies to ITE intended to supply and receive operating power via a telecommunication network, where the voltage exceeds the limits for TNV circuits.		

[a]ANSI publications are available at http://www.ansi.org/.
[b]BICSI publications are available at http://www.bicsi.org/Publications/Index.aspx.
[c]ETSI publications are available at http://www.etsi.org.
[d]IEC publications are available at http://www.iec.ch/.
[e]IEEE publications are available at http://shop.ieee.org/ieeestore/.
[f]ITI publications are available at http://www.itic.org/.
[g] ITU-T publications are available at http://www.itu.int/.
[h]NFPA publications are available at www.nfpa.org/aboutthecodes/list_of_codes_and_standards.asp.
[i]Telcordia publications are available at http://telecom-info.telcordia.com/site-cgi/ido/index.html.
[j]TIA publications are available at http://www.tiaonline.org/standards/search_n_order.cfm.
[k]Underwriters Laboratories publications are available at http://ulstandardsinfonet.ul.com/catalog/stdscatframe.html.

 Copyright © 2006 IEEE. All rights reserved.

Annex 9D

(informative)

Trends and changing responsibilities

9D.1 Increasing IT department involvement with the facility management department

The first trend is that today's IT department is likely involved with the facility manager for the design, development, approval, installation, maintenance, and management of telecommunications wiring and infrastructure. Typical IT department functions span all the owned and leased buildings and properties for the enterprise. The infrastructure includes voice, video, and data with fiber, copper, or coaxial cabling. The infrastructure also includes telecommunication rooms, equipment rooms, raceways, conduit systems, duct banks, and telecommunications customer-owned manhole systems.

9D.2 Gradual abandonment of the raised floor concept for IT equipment

A second trend is the gradual abandonment of the raised floor concept for IT equipment. This trend is somewhat sponsored by the pre-engineered integrated solution (second trend). Most data center type installations today that still use a raised floor have some or all data cabling overhead. The number of branch circuits per square foot in the modern data center is much greater than it was at the time when the raised floor architecture was developed. During the mainframe era, a single, hardwired, high amperage branch circuit could service a cabinet using 6 floor tiles or 24 ft^2. Today, this same area could contain two racks, each of which could require 12 kW of 120 V circuits with an A and B feed, for a total of 12 branch circuits. The density of the resulting conduits associated with this dramatic increase in branch circuits represents a serious obstacle to air flow. The need for a copper ground grid has been virtually eliminated. Copper network cabling is galvanically transformer isolated and not subject to interference from ground shift up to 1000 V and routinely interconnects distances over 50 m (165 ft). Fiber-optic network cabling is totally immune to ground shift. Contrast this to the mainframe era requirement for directly interconnected equipment to be hard-grounded together (ground plane) to less than 0.1 V differential. This requirement was considered necessary to preserve coupled data signal integrity and prevent equipment damage.

9D.3 Impact of technology convergence on product deployment

A third trend is the impact of technology convergence on product deployment. Today's telecommunications equipment is likely product safety listed as ITE. Increasingly, electronic equipment previously designed for the regulated public telecommunications network environment of the TSP is being deployed in the nonregulated telecommunications environment. This TSP electronic equipment is typically more robust due to more stringent (regulated) availability requirements. An example of this robustness is the severity of the surge testing requirements, whereby supplementary SPDs may not be needed at the installation location. Electronic equipment not designed to the exacting requirements for the TSP network may fail or cause a communications failure when powered from or connected at the TSP equipment room. An example of the impact of technology convergence is the drastic reduction in size and capability of the 200 A rectifier (ac to dc) traditionally used to power dc telecommunications equipment. From Figure 9D-1 note that the 2004 version is a small rack-mounted unit with monitoring, alarm, and control capabilities, more functions than a stand-alone rectifier. Further, the unit would be listed as IT equipment where deployed in the commercial and industrial environment.

Copyright © 2006 IEEE. All rights reserved.

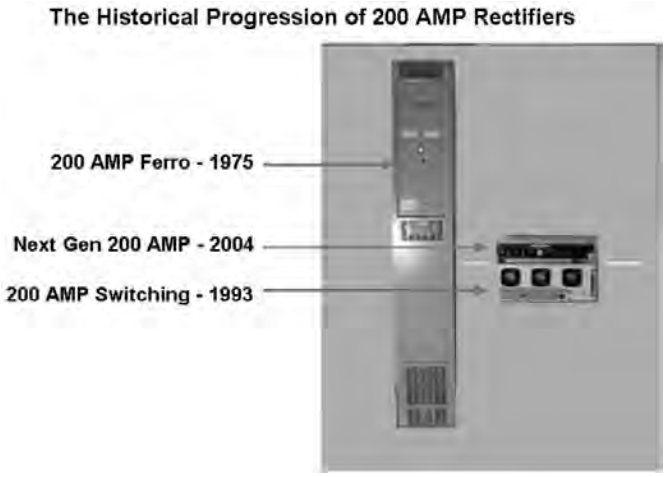

Adapted with permission from Emerson Network Power.

Figure 9D-1—Impact of technology on size of rectifiers (ac to dc)

9D.4 Convergence of wire-line and wireless operations in the same location

A fourth trend is the convergence of wire-line and wireless operations at the same location. Today's commercial and industrial building may utilize satellite dishes, rooftop antennae, a rooftop tower, or a nearby fixed tower for wireless communications such as GPS, satellite television, Internet. and radio services. This increasingly common communications infrastructure brings with it considerable concerns due to lightning strikes and RFI. See Figure 9D-2.

9D.5 Effect of network transformation on dc power distribution for dc powered telecommunications-type equipment

A fifth trend is the effect of network transformation on dc power distribution for dc powered telecommunications-type equipment. Consider the trend for the public telecommunications network. Generally, smaller, higher density dc power supplies (or systems) are increasing used at the telecommunications loads. See Figure 9D-3. Large-scale bulk dc power plants found in traditional circuit-switched telecommunications centers (see Figure 9D-4) are usually centralized open-battery configurations. These plants power any distributed telecommunications by means of large cables connected to distant battery distribution fuse bays (BDFBs). Today, for the growing market of packet-switched telecommunications (see Figure 9D-5), the trend is to migrate from the large bulk centralized dc power plant concept to cabinetized or rack-mounted smaller power systems placed near the telecommunications load point, such as an enclosure or rack. Further, the power usage pattern changes since equipment such as a soft switch may exhibit near-constant demand, even as access gateways carry more lines. See Figure 9D-6.

 Copyright © 2006 IEEE. All rights reserved.

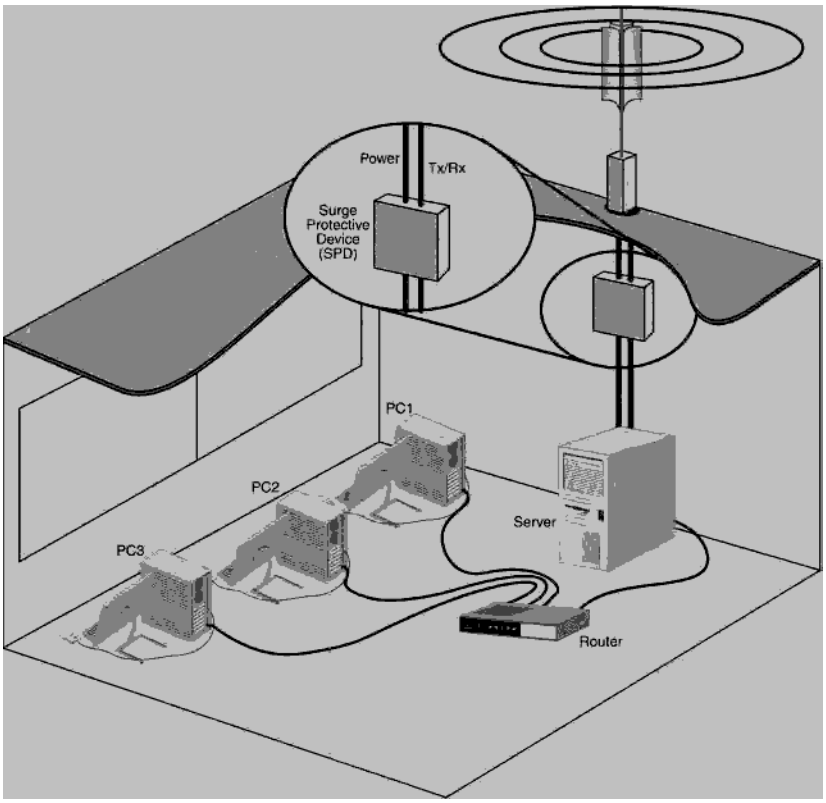

Figure 9D-2—Convergence of wire-line and wireless operations at the same location

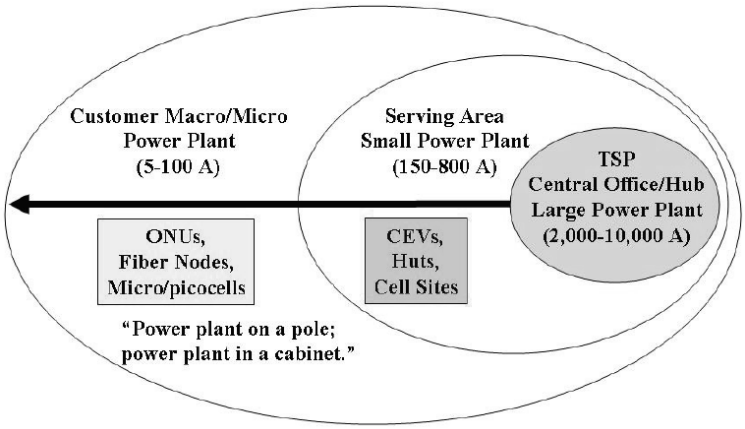

Reprinted with permission from Skyline Marketing Group.

Figure 9D-3—TSP trend to smaller higher density power systems

Copyright © 2006 IEEE. All rights reserved.

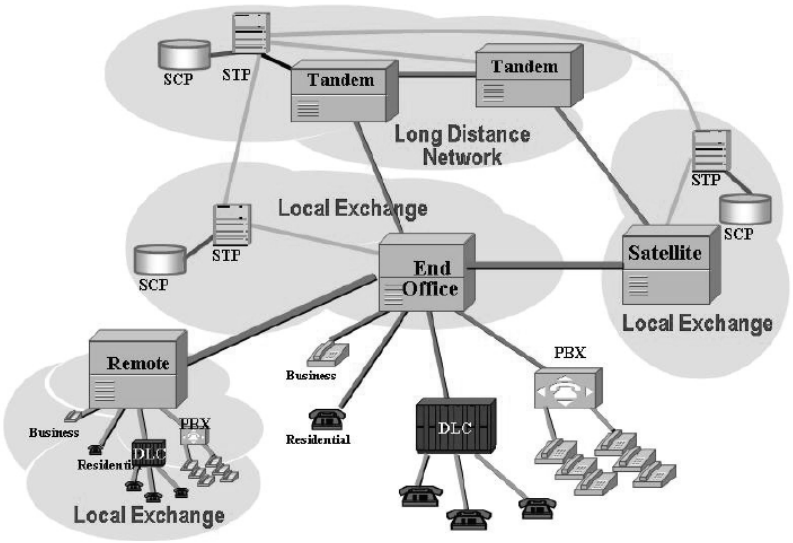

Adapted with permission from Skyline Marketing Group.

Figure 9D-4—Traditional TSP circuit-switched telecommunications

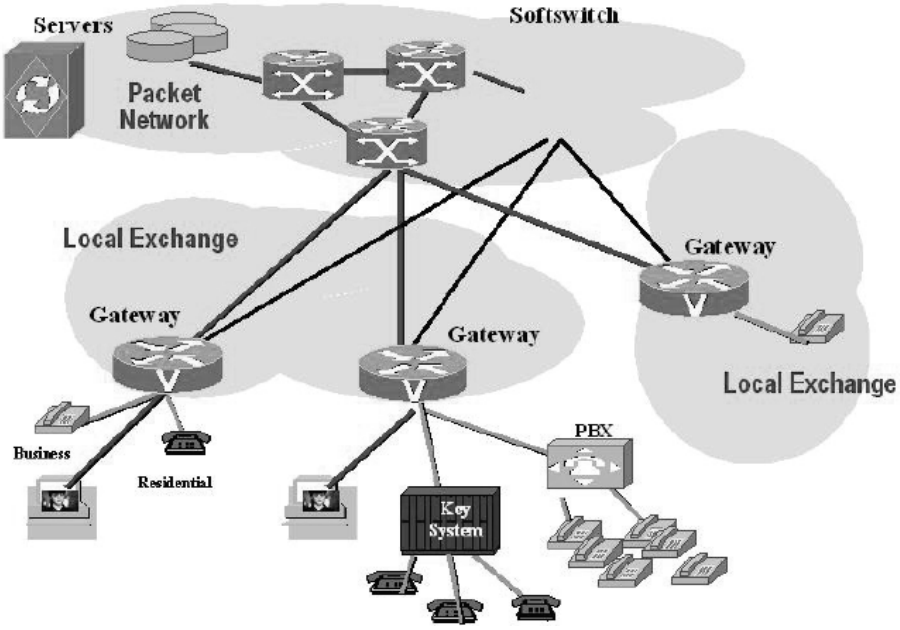

Adapted with permission from Skyline Marketing Group.

Figure 9D-5—Trend to TSP packet-switched telecommunications

 Copyright © 2006 IEEE. All rights reserved.

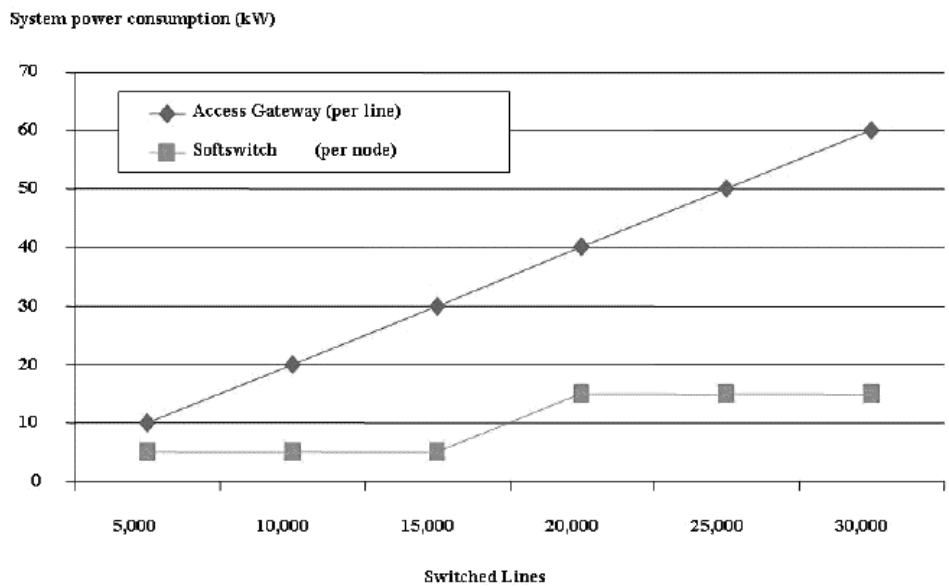

Reprinted with permission from Skyline Marketing Group.

Figure 9D-6—Changes in power usage pattern per type of TSP load

9D.6 Advancements in power technology to meet the challenges of distributed systems

A sixth trend is advancements in power technology to meet the challenges of distributed systems. Specific challenges include higher reliability, higher power density, harsher environments, higher efficiency, voltage/current distribution, higher transient response, and longer back-up times. Solutions to these challenges include increased integration, innovative mechanical design, thermal management, higher switching frequencies, lower conduction losses, improved EMI design, lower output impedance, and component improvements. An example of advancements in power technology for a 200 A rectifier is shown in Figure 9D-1. Table 9D-1 illustrates advancements in power technology for rectifiers (ac to dc) likely by year 2008—or before.

Table 9D-1—Trends in power technology advancements for rectifiers (ac to dc)

Parameter	2003	2008	Change
Density	3 W/in^3 to 8 W/in^3	8 W/in^3 to 15 W/in^3	300%
MTBF	500 kh	750 kH to 1000 kh	175%
Efficiency	80% to 85%	85% to 92%	15%
Control	Analog	Digital	—
Switching frequency	100 kHz to 200 kHz	100 kHz to 500 kHz	250%
Monitoring	Analog and digital	Digital	—
Magnetics	Planar ferrite 10% custom shapes	5% thin film 50% custom shapes	—

Copyright © 2006 IEEE. All rights reserved.

9D.7 Utilization of an adaptable rack enclosure power system able to be switched from ac to dc without any additional engineering

A seventh trend is the utilization of an adaptable rack enclosure power system able to be switched from ac to dc without any additional engineering. An adaptable rack enclosure power system is able to support mixed ac and dc loads within a rack enclosure and/or mixed ac and dc rack enclosures within a row of racks. The adaptable rack power system eliminates the need for hardwiring, cascaded breakers, and breaker coordination analysis, which suggests multiple branch circuits per rack. Ideally, multiple feeds are provided using a single multibranch cable to the rack in order to simplify wiring to the rack.

9D.8 Integration of ac input power transfer and protection components into a single enclosed unit

An eighth trend is the integration of ac input power transfer and protection components into a single enclosed unit, especially for telecommunications-type equipment located in the OSP. See Figure 9D-7. With this trend, the need for the electrician's skill in component assembly and applying applicable electrical codes is greatly reduced. Further, the integrated unit design allows for more performance features.

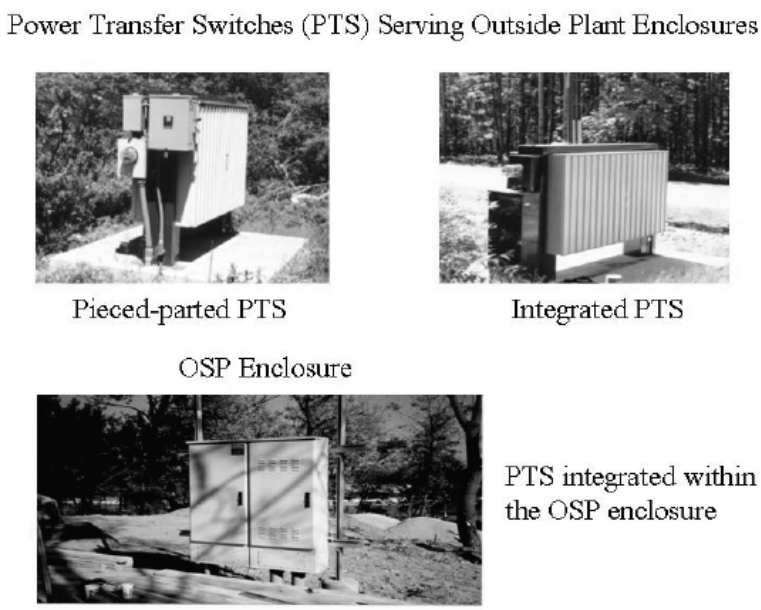

Adapted with permission from Skyline Marketing.

Figure 9D-7—Trend to integrated ac input power for OSP enclosures

 Copyright © 2006 IEEE. All rights reserved.

Annex 9E

(informative)

Background on telecommunications

Telecommunications evolved from the telephone system. Information technology (IT) evolved from business and office machines. Distributed computing evolved from IT centers, such as data rooms. Technology convergence has essentially obliterated most historical demarcations and segregations.

9E.1 Telephone / telecommunications

Telephony is often used to refer to the public telecommunications industry. Telephony is the science of transmitting voice, data, video, or images. However, telephony is still primarily associated with voice communication—a legacy of the telecommunications company's primary operation of switching analog voice circuits. Telephony services use both wired and wireless systems, often at the same time. Telephony electronic systems are designed for high network reliability, and TSPs require electronic equipment to meet stringent testing requirements. The requirements most commonly tested to are Telcordia's GR-1089-CORE-2002, GR-63-CORE-2002, and GR-487-CORE-2000. Some TSPs require additional testing to internal standards. These testing requirements are in addition to any product safety approval under UL 60950-2000.

In order to maintain high network reliability, the powering, grounding, and electrical protection standards and practices for public telecommunications central offices and similar facilities are very stringent. The following documents are typical:

a) ANSI T1.308-1996 (R2002), Central Office Equipment—Electrostatic Discharge Immunity Requirements
b) ANSI T1.311, DC Power Systems—Telecommunications Environment Protection
c) ANSI T1.313-2003, Electrical Protection for Telecommunications Central Offices and Similar Type Facilities
d) ANSI T1.315-2001, Voltage Levels for DC Powered Equipment Used in the Telecommunications Environment
e) ANSI T1.316, Electrical Protection of Telecommunications Outside Plant
f) ANSI T1.318, Electrical Protection Applied to Telecommunications Network Plant at Entrances to Customer Structures or Buildings
g) ANSI T1.330-1997 (R2002), Valve Regulated Lead-Acid Batteries Used in the Telecommunications Environment
h) ANSI T1.332-1999, Electrical Protection of Broadband Facilities
i) ANSI T1.333-2001, Grounding and Bonding of Telecommunications Equipment
j) ANSI T1.334, Electrical Protection of Communications Towers and Associated Structures
k) ANSI T1.337-2004, Requirements for Maximum Voltage, Current, and Power Levels in Network-Powered Transport Systems
l) ANSI/TIA/EIA J-STD-607-A, Commercial Building Grounding (Earthing) and Bonding Requirements for Telecommunications

These documents are primarily intended for application to the telecommunications (regulated utility) environment and may also be useful for reference and consideration within the commercial and industrial (non-regulated) environment. For example, ANSI/TIA/EIA J-STD-607-A contains the following reference to an ANSI T1 document:

Copyright © 2006 IEEE. All rights reserved.

> "It is anticipated that the requirements in this Standard, which address grounding for commercial buildings, will differ from commercial service provider requirements, which are specified in T1.313-1998. The document T1.313-1998 specifications support a very robust level of service appropriate to a service provider. Users of this Standard are encouraged to refer to T1.313-1998 where robust service requirements exist."

The NEC does not cover the equipment considered under the exclusive control of communication utilities. Prior to the divestiture of the U.S. telephone industry in 1984, the telephone company provided for the entire telephone network, including the customer premises telephone wiring and telephone terminal equipment (TTE). NEC Chapter 8, Communications Systems, applies to the customer locations.

9E.2 Telecommunications

The divestiture of the U.S. telephone industry in 1984 resulted in a number of changes that affected every part of the telephone industry, including the design and location of telephone equipment.

The FCC changed the public telephone network (PTN) interface demarcation rules of Part 68 in 1988. Since that time, the customers (residential, commercial, and industrial) are responsible for all wiring and equipment on the customer side of the demarcation point. In the commercial and industrial environment, telecommunications equipment that is under control of the tenant or owner is often called a private automatic branch exchange (PABX), key system, station set, or telecommunications system. Telecommunications equipment and apparatus is historically termed *customer premises equipment (CPE);* CPE for legacy telephone equipment is known as *telephone terminal equipment (TTE).* CPE for computer-integrated telephony systems is known as *information technology equipment (ITE).*

Telecommunications installation sizes vary from the single-line station set to large dedicated and environmentally conditioned equipment rooms housing expansive ac and dc electronic equipment systems. Large PABXs are typically those with 500 or more stations. Central office telecommunications lines (trunks) connected to the PABX are provisioned according to voice and data traffic requirements. The large legacy PABX is considerably similar to a small telecommunications central office. Conventional PABXs use circuit switching optimized for voice and data. (For more efficient data, the PABX manufacturer might provide a data handling system module.) More recent converged communications embed the PABX functions within a computer network such as a LAN (LAN telephony). Commonly noted advantages include scalability and simplified phone access via an Ethernet connection.

U.S. industry standards for the commercial telecommunications environment typically come from the Telecommunications Industry Association (TIA). Industry methods for the commercial telecommunications environment typically come from Building Industry Consulting Services International (BICSI). Many commercial buildings need to accommodate a multivendor, multiproduct, and multitenant environment.

Commercial building environments rarely establish the stringent methods utilized in the public telephone central office. Two examples of such an application in a commercial building are as follows:

a) Where a serving communications utility occupies a restricted access space within a commercial building and installs equipment that functions as part of the PTN.

b) Where a tenant or owner elects to install telecommunications equipment in the commercial building in accordance with telecommunications-utility industry practices for reasons of additional reliability, survivability, or both.

 Copyright © 2006 IEEE. All rights reserved.

9E.3 Information technology

Today's telecommunications terminal equipment for the U.S. commercial and industrial environment is product safety listed to UL 60950-2000 as *information technology equipment*. Traditional TTE in the U.S. was listed to UL 1459-1995 and is now considered legacy equipment. Today's ITE for the U.S. is product safety listed to UL 60950. With technology convergence well-established, UL 60950 describes both telephone and computer functions as *information technology*.

9E.3.1 Internet

The Internet, sometimes called simply *the Net,* is a worldwide system of computer networks (a network of networks). A user at any one computer can, if they have permission, get information from any other computer. It was originally conceived by the Advanced Research Projects Agency (ARPA) of the U.S. government in 1969 and was first known as the ARPANET. The initial objective was to create a network that would allow users of a research computer at one university to be able to contact research computers at other universities. A side benefit of ARPANET's design was that, because messages could be routed or rerouted in more than one direction, the network could continue to function even if parts of it were destroyed in the event of a military attack or other disaster.

Today, the Internet is a public, cooperative, and self-sustaining facility accessible to hundreds of millions of people worldwide. Physically, the Internet uses a portion of the total resources of the currently existing public telecommunication networks. Technically, what distinguishes the Internet is its use of a set of protocols called TCP/IP (for Transmission Control Protocol/Internet Protocol). With the proliferation of low-cost desktop and laptop computers, communication software and hardware, high-speed communications circuits, and Internet service providers (ISPs), millions of people and businesses are able to connect to the Internet.

The explosive growth in the number of Internet service providers (ISPs) creates concerns about where to locate the rapidly increasing array of Internet equipment and how to protect it. Internet equipment (servers, routers, connectors) is typically located in both the telecommunications central offices and in commercial buildings.

In the commercial environment, server farms, server hotels, and Internet-intensive data centers are becoming known as *Internet service exchange* (ISX) facilities. ISXs house large banks of ac powered Internet equipment. Commercial buildings adequately designed with the infrastructure for ac powered Internet equipment are becoming known as *Internet-ready buildings* (IRBs).

Equipment rooms vary in size according to the number of TSP lines incoming to the facility and to the number of telecommunications stations (telecommunications sets) required by tenants in the facility. Large IRBs may have large banks of telecommunications equipment installed, especially if they own their own telecommunications exchange (i.e., in a telecommunications number, 123-456-7890, "456" is the exchange).

9E.3.1.1 Internet links via telecommunications

Telecommunication circuits (links) provide the paths that Internet data signals must traverse. Whether it is a twisted-pair copper line, a coax cable, a fiber-optic cable, a microwave transmission link, or a cellular base station, the quality of service along the Internet path still depends on the reliability and availability of these links.

The equipment necessary to operate these links is still predominantly dc powered, a legacy of their origins within the telephone industry. Remote telecommunications equipment located a significant distance from the telecommunications central office may be involved as a link. The long-term dc back-up power afforded

Copyright © 2006 IEEE. All rights reserved.

by large battery plants in traditional telecommunications central offices is typically not available to the remote telecommunications equipment.

9E.3.1.1.1 Internet end-user dependency on both equipment and links

Even when the remote telecommunications link is up and running, if the Internet equipment at the ISP or ISX fails, the end user's Internet service will still be disrupted.

9E.3.2 Co-location with telecommunications—Concerns

Co-location within a commercial building of ac powered IT and Internet equipment and dc powered telecommunications equipment creates concerns, such as the following:

a) Establishing the necessary grounding practices to support multi-sourced equipment, RAAs, and intersystem metallic communication links

b) Flexibility and adaptability of equipment rack ac and dc powering options

c) Provisioning back-up power systems to provide both ac and dc standby power

d) Sharing a centralized dc power system serving different equipment bonding (and grounding) topologies

e) Provisioning dual-powered electronic equipment from different power systems without impacting other electronic loads on either power system

9E.3.3 Co-location with telecommunications—Scenarios

Co-location within a commercial building may take different scenarios, such as the following:

a) Shared power and grounding resources within the same RAA room (such as an equipment room).

b) Dedicated power and grounding resources within the same RAA room. For example, the telecommunications equipment could be centralized dc powered and arranged into an IBN with its grounding single-pointed to the approved grounding structure (ground bar?) for that room.

c) Power resources and telecommunications in separate RAAs sharing the same building grounding system. Interconnection is only by telecommunications metallic links and the building grounding system.

d) Power resources and telecommunications in separate RAAs sharing the same building grounding system. Interconnection is only by the building grounding system.

Co-location may also take place at facilities controlled by a TSP. An example is where an ISP co-locates at a telecommunications company central office. Although similar concerns are involved, this scenario is considered outside the scope of this recommended practice.

9E.4 Distributed computing (and controls)

Distributed control systems and programmable logic controllers continue to move onto the factory floor. They are controlling more mission-critical applications than ever before. When they go down, the pace of productivity can slow to a crawl.

Distributed computing continues to grow farther apart in horizontal and vertical distance and depends upon computer and telecommunications links for information control and transfer. Increased separation may magnify equipment and signaling susceptibility to power quality and grounding problems, depending upon the design robustness and application of the equipment and signaling links.

 Copyright © 2006 IEEE. All rights reserved.

Power electronics and distributed computing (microprocessors and peripherals) are increasingly combined to automate and control industrial processes and data acquisition and computer aided manufacturing. Networked (LAN and WAN) PCs are controlling more of the critical applications on the factory floor—and are replacing mainframe computers. Factors promoting this factory distributed computing are as follows:

a) Plug-in data acquisition and control boards readily available from various manufacturers

b) Simplified-software enabled use of SCADA (Supervisory Control and Data Acquisition System) to communicate data to various systems throughout the factory

Copyright © 2006 IEEE. All rights reserved.

Annex 9F

(normative)

Industry-described telecommunications surge environment

The telecommunications industry provides standards that describe the anticipated electrical environment and procedures for testing telecommunications terminal equipment (TTE and ITE) to that environment. The described environment should also be considered where the customer owns the outside plant, such as in a large campus complex.

According to TIA PN-3-3283-RV2, sources of overvoltages from electrical power to telecommunications terminal equipment are considered to be the following:

a) Contact with multigrounded neutral primary power line, 4 kV to about 150 kV
b) Induction from primary power line fault current
c) GPR from primary power line fault current flowing to ground
d) Contact with secondary power line, 120 V

Maximum induction voltage could occur when a telecommunications cable is run in joint use with power lines. Contact conditions can occur on any telecommunications cable that is run with power cables, including short lines within a campus environment.

According to TIA PN-3-3283-RV2, the most common source of surges on telecommunications tip-ring conductors results from a lightning strike to an aerial or buried cable shield. The lightning current flowing on the shield to earth induces a voltage into the cable pairs within the shield. If the ground path offers a high impedance to the lightning current, the voltage along the shield may build-up enough to produce a side flash to the cable pairs within the shield, especially at wire junctions where the only insulation is air spacing. A side flash can be considered a direct lightning strike to tip-ring that is mitigated by a parallel ground path along the shield.

Another source of surges to equipment is via the power service to the building. Lightning surges may enter a building over the serving power service conductors. Such lightning activity can also result in a local GPR with respect to remote earth. This GPR can cause telecommunications protectors to backfire (operate) toward the remote ground.

The function of the telecommunications protector is mainly to arrest voltages from induced lightning events and from power crosses, which can be much higher than 1000 V. The induced peak current for cable runs is limited by cable impedance. Limitation occurs since the longer the cable length, the higher the induced voltage and wire resistance. This results in induction looking like a constant current source of about 5 A, but with a wide variation possible.

According to TIA PN-3-3283-RV2, for the purposes of testing TTE and ITE, surges are classified as described in Table 9F-1.

9F.1 Lightning

Exposure to lightning can be influenced by the site arrangement. Ferrous metal buildings help shield telecommunications systems and wiring from both radiated (plane wave) RF energy and for magnetic (H) fields. Concrete with steel mesh or rebar will only partially attenuate these fields. Metal buildings do not reduce the exposure to lightning.

 Copyright © 2006 IEEE. All rights reserved.

Table 9F-1—TIA PN-3-3283-RV2 classification of surges

Type	Description of surge
L-type (longitudinal)	Lightning surges induce voltages onto both tip and ring conductors. When a power line fault causes arcing to cable pairs, the arcing usually occurs to both conductors. A GPR has the same effect as a line fault but in the reverse direction.
M-type (metallic)	Metallic voltages (between tip and ring) are created when the primary protector grounds only one conductor of the tip-ring pair. The longitudinal voltage on the other conductor then becomes a metallic voltage.
P- type (power)	Power line surges commonly appear on a grounding conductor (causing a GPR for the telecommunications line as well as the power line), but the phase and neutral conductor can also be hit by lightning between the power company transformer and the building being served. A high voltage on the building's grounding system can also arc over to phase and neutral, and the surge is then transmitted through the power system as a common-mode voltage.
T-type (transverse)	Equipment with a 2-wire power cord usually has no ground reference, but a P-type common-mode surge can appear on phase and neutral. The telecommunications line then becomes the ground reference for the surge, and arcing can occur between the power line and the telecommunications line. This is known as a *transverse surge.* For equipment with a 3-wire power cord, transverse surges are still possible if the insulation between phase/neutral and the grounding conductor is better than the insulation between phase/ neutral and the telecommunications line.
G-type (ground)	A surge along ground leads or through building steel is common. Some equipment may have a protector ground, a power cord grounding conductor, and a permanent grounding conductor to building steel. Lightning could then produce voltage on one ground connection and not the other, producing a surge through the equipment ground.
I-type (intrabuilding)	An intrabuilding surge occurs when the steel structure of a building conducts a lightning discharge, which in turn induces a longitudinal voltage in telecommunications cables running parallel with the steel. This is a source of longitudinal voltages for cables that do not connect to the OSP.

9F.1.1 Outside plant exposure

NEC Section 800-30 classifies all OSP facilities as exposed to lightning except where located in the following:

a) Areas with five or less annual thunderstorm days and ground (earth) resistivity less than 100 ohm-m.

b) Areas where buildings are high and close to each other (such as a high-rise metro area) and can intercept lightning.

c) Areas between buildings (inter-building) where the connecting distance is 42 m (140 ft) or less and the cabling's continuous metal shield or the continuous metallic conduit containing the cabling is bonded to the grounding electrode system at each building.

All-dielectric fiber-optic cable should be excluded since it contains no metallic members. However, in locations exposed to lightning, improperly installed buried all-dielectric fiber-optic cable may be subject to mechanical crushing damage due to arcing of lightning to nearby underground metallic objects.

Copyright © 2006 IEEE. All rights reserved.

9F.1.2 Lightning risk assessment

A determination of lightning risk to the commercial or industrial building should follow the procedures contained in NFPA 780 Annex D. The risk factor is based upon lightning ground flash density for the effected area. Recommended practice is to also follow the recommendations described in NFPA 780 Annex I for buildings housing critical telecommunications electronic equipment.

According to ANSI T1.318, a determination of the lightning exposure status of a TSP customer structure or building shall take into account both the exposure of the structure itself as well as the communications cables that serve it. A customer structure or building shall be classified as exposed to lightning if the serving telecommunications network OSP or the serving commercial ac power is considered exposed to lightning. By their very nature, tall structures, such as towers, buildings and antenna masts, are more susceptible to lightning activity. Radio antennas/towers may expose a customer location to the damaging effects of lightning. Due to their increased elevation and lightning risk probability, all exposed buildings with rooftop towers should be equipped with an LPS as described in NFPA 780.

9F.2 Influence from building lightning protection system

During lightning events, the components of a properly installed LPS (per NFPA 780) will carry surge currents to earth. Such currents create electromagnetic fields that can induce currents onto nearby telecommunications wiring and equipment. Telecommunications equipment should be placed into the building in a manner that reduces the expected impact from lightning. For example, separation distances from the LPS should be acknowledged. Lightning down conductors should be avoided for use as power system and telecommunications equipment ground references. Lengthy runs of cabling parallel to a LPS grounding conductor should be avoided. For compatibility with a LPS, generally the center of the building (building core) is the better location for telecommunications equipment and cabling. However, due to other factors such as the location of the grounding infrastructure for telecommunications and the required intersystem bonding to the electrical power system, the center of the building location may be impractical, especially for existing buildings.

9F.3 Disturbance to electrical power

Existing equipment in a building can create power disturbances. This equipment includes air conditioning systems, copiers, and laser printers. Elevators and microwave ovens can also cause problems. In industrial settings, the problems are more complex. Heavy equipment being turned on and off can lead to rapid reduction in the power load, creating surges or swells that damage hardware and other electronics. Process equipment like curing ovens and assembly robotics can cause staggering jumps and drops in power usage.

Weather is also a factor. Lightning and wind associated with a thunderstorm are a real threat to power quality. In addition, the older the building, the greater the chance that the wiring is not designed to support electronic equipment. Cold winters can cause problems due to the small under-the-desk heaters that cycle on and off, creating significant power fluctuations.

9F.3.1 Power system harmonics

Environmental exposure to harmonics generated from ITE is decreasing. Today's ITE, including servers, routers, hubs, and storage systems, almost universally uses a power supply design known as *power factor corrected.* Further, some loads are connected phase-to-phase (particularly in the U.S.), and therefore do not contribute to the neutral current.

 Copyright © 2006 IEEE. All rights reserved.

However, many desktop PCs may still use a power supply design known as a *capacitor input switch mode power supply,* which presents a nonlinear load to the ac power system.

9F.4 Proximity to power station or substation

Some commercial or industrial locations may be located, intentionally or unintentionally, within close proximity to a power station or substation. The concern for the proximity to a power station or substation becomes greater as the location becomes more rural, due to the lack of available external "community" grounding systems at the more rural locations. Power fault currents returning back to the power station or substation will use the earth as a portion of the return path and create a GPR on the ground grid structure area at the station, substation, or high-voltage transmission line. For example, in high-voltage corridors where wireless personal communications systems (PCS) are often deployed, approximately 30 kV peak asymmetric is reported. However, in an area such as a very large community or a city, the available metallic structure mass includes many multigrounded neutral conductors and buried metallic facilities. In these locations, significantly more earth return fault current flows back to the power station or substation through this massive and very low impedance. With significantly less return current flowing in the earth, the GPR is reduced and becomes less of a concern, if at all.

Telecommunications cables serving power stations or substations are typically dedicated for that purpose. A separate general-use cable is typically placed by the TSP for other subscribers (such as at a commercial or industrial building) located within the calculated zone of influence (more than 300 V peak) for that power station or substation. The splice point for the dedicated cable serving the power station or substation and the general use cable serving the other subscribers is required per IEEE Std 367-1996 and IEEE Std 487-2000 to be at a distance from the power station or substation where the calculated GPR, in the earth, is less than 300 V peak asymmetric.

This information may be useful for selecting the location of a commercial or industrial facility and for such a facility with its own power station or substation, such as at a large campus. See also 9F.8.

9F.5 Proximity to end of power line

Commercial and industrial locations may be served from power lines that terminate service availability near the building location. In this situation, the voltage may be delivered to the building at the lower end of the tolerable voltage range. During some types of surge and fault events, the voltage may rise momentarily beyond the tolerable voltage range due to reflecting waves (doubling) at the terminating end. Where these locations exist, the serving power utility should be consulted to determine what mitigating methods (if any) should be planned.

9F.6 Power influence on exposed communications circuits

OSP subject to power induction of more than 300 V ac to ground is considered exposed. Although lower voltages may exist as a result of unbalanced power line operation, induced voltages exceeding 300 V ac to ground are most likely caused by power line faults.

If large enough, voltages induced into OSP can create personnel safety hazards and service problems. The harmonics of 60 Hz (particularly the odd triplens such as 540 Hz and 900 Hz) produce circuit noise and can interfere with normal telecommunications equipment operation. This is especially true of electronic equipment designed to operate at low signal levels. These harmonics (and their source) are typically identified during inductive coordination by specialized test equipment such as a spectrum analyzer. Methods of minimizing the power system influence include obtaining well-balanced, three-phase power systems and

Copyright © 2006 IEEE. All rights reserved.

inserting tuned filters into the power system capacitor bank grounding conductor to reduce certain harmonics (such as 540 Hz).

Noise can be a problem for both public telecommunications networks and customer owned telecommunications networks with electrically exposed OSP. Proper circuit design, grounding and bonding, and cable shield continuity helps to minimize or eliminate interference. Electrically unbalanced pairs, or cross talk from adjacent pairs, can cause problems for both voice and data circuits.

According to TIA PN-3-3283-RV2, induction resulting from magnetic fields surrounding power distribution systems can result in longitudinal voltages appearing on telecommunications tip and ring conductors with respect to earth. Since the induced voltage is in series with, and generally distributed along, the loop or metallic facility involved, the longitudinal mode voltage will be a function of the far-end termination of the loop as well as the loop characteristics. These voltages are usually low, although there is a small probability of 50 V ac or greater when the terminal equipment has high longitudinal impedance and the central office (or serving facility) end has low longitudinal impedance.

Power influence (also known as *noise-to-ground, common-mode noise*, or *longitudinal noise*) typically appears when the cable shield is discontinuous, improperly grounded and bonded, or both. Wherever the common-mode power influence is converted to differential mode within the telecommunications circuit, audible noise can appear. Lower frequency noise, like 60 Hz power influence, generally interferes with voice frequency service, such as plain old telephone service (POTS). Higher frequency noise can interfere with or interrupt digital services. Specialized test sets are used to connect to the cable pair and measure circuit balance and longitudinal noise (measured in dBrnC). Noise due to poor balance is generally referred to as *metallic, circuit,* or *differential-mode noise*. Poor cable pair balance (<60dBrnC) is a common occurrence if the tip and ring are not electrically identical. Even low levels of power influence (<80dBrnC) can cause an unbalanced circuit pair to be noisy. Limiting the exposed cable length beyond the serving telecommunications equipment can reduce power influence problems. This factor can be important for CO-OSP in a large campus environment or in determining suitability of OSP from the TSP.

For OSP cables without proper grounding, bonding, and shield continuity:

a) Cables can be damaged from lightning events.
b) Electronic circuit cards in telecommunications equipment connected to such cables can be damaged from lightning events.
c) Users may hear a “hum” on their telecommunications line.
d) Electronic equipment may not function properly.

An electrically balanced pair will reject the noise since the energy radiated affects the tip and ring conductors equally (referenced to ground). However, perfect pair balance rarely exists. Wet cable, bad splices, or unequal length paired conductors can lead to balance problems. Any imbalance will result in a potential difference across the tip and ring conductors. Because adequate pair balance is key to eliminating noise problems, several test methods are typically used to verify capacitive, resistive, and longitudinal balance.

These tests are typically performed using specialized test equipment of a type originally developed by the telecommunications industry. The test equipment may be referred to generically as *balance and termination test sets.* The longitudinal balance test simulates the presence of longitudinal induced noise (power influence) and measures the difference between the induced noise and the level of the differential signal (metallic noise) it induces on the pair. This test capability is important since the noise induced on it may vary with the time of day. This can directly correspond with demand on the power grid. For example, noise may be more prominent at noon on a hot day, when air conditioners are drawing a lot of power.

Where metallic noise is a problem but power influence readings are acceptable, the problem is likely the result of poor balance or excess power harmonics. When both metallic noise and power influence readings

 Copyright © 2006 IEEE. All rights reserved.

are unacceptable, the problem is likely related to a poor cable shield (sheath) ground or shield bonding problems.

9F.7 Power fault and contact

All primary power systems operate at more than 300 V ac, while most secondary systems operate at lower voltages. 300 V ac power systems must be considered hazardous since the currents imposed as a result of accidental contact can severely damage physical OSP or be fatal to personnel. Under power line fault conditions (which may induce high voltages into telecommunications lines) or with a power line cross (metallic contact between power conductors and telecommunications cables), telecommunications protectors (SPDs) serve to limit potentials. In most cases, power system fault detectors (reclosures) will limit the duration of such voltages to 5 s. However, high-resistance faults can last indefinitely.

Since power and telecommunications cabling often serve the same customers, OSP facilities are sometimes located close to one another and may even share the same pole (joint-use). Aerial or direct-buried OSP that is subject to possible contact by power conductors operating at more than 300 V ac to ground is considered exposed to power contact.

9F.8 Ground potential rise

Local ground at the commercial or industrial location can experience a GPR during either a lightning event or a power system fault event at or nearby the building location. The likelihood of a GPR occurrence increases where the building location is:

a) A tall structure (a rooftop tower) subject to lightning strikes.

b) Near a tall structure (such as a radio tower) that is subject to lightning strikes.

c) Near a power utility facility such as a station, substation, or high voltage (>115k V ac transmission line).

Figure 9F-1 illustrates power fault current returning over the earth back to the power substation.

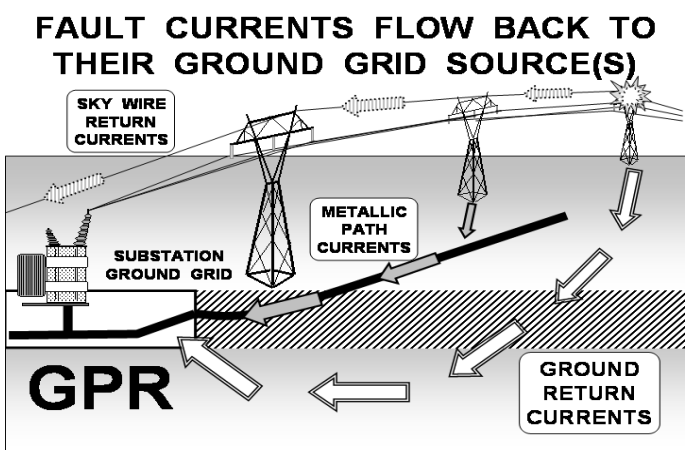

Reprinted with permission from *High Voltage Protection—Engineering*, 2003 edition, William G. Petersen.

Figure 9F-1—Power fault ground return currents creating a GPR

Copyright © 2006 IEEE. All rights reserved.

The likelihood of a GPR is greatest in the vicinity of a power station or substation. To provide service to the campus and its associated structures, substations are commonly located on campus premises. GPRs can develop between the power station or substation ground and remote grounds as a result of a fault anywhere in the power network. It will persist until the fault is cleared. Any telecommunications facilities or ground systems located in close proximity to the point of induced voltage will be influenced by the GPR.

According to ANSI T1.318, telecommunications network plant serving a customer structure or building is classified by the TSP as exposed to GPR if the possibility exists that local ground may differ from remote earth by 300 V ac, or greater, as determined by IEEE Std 367-1996.

Figure 9F-2 illustrates a GPR profile determined for a certain telecommunications central office location somewhat near the power substation. A similar situation could exist if a power substation were to be placed in the vicinity of a commercial or industrial building location.

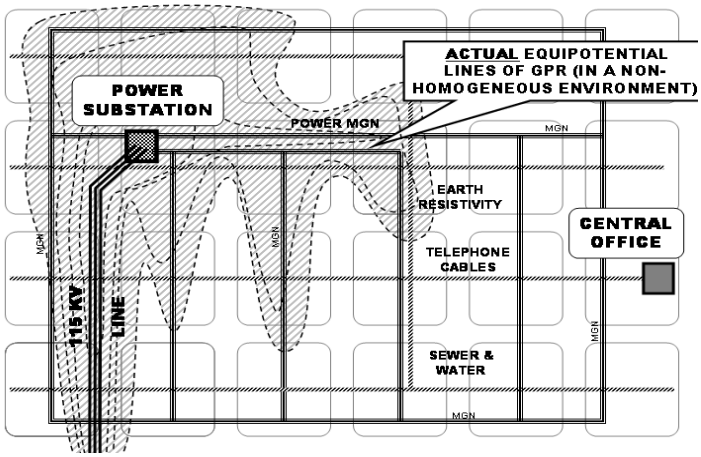

Reprinted with permission from *High Voltage Protection—Engineering*, 2003 edition, William G. Petersen.

Figure 9F-2—Example GPR profile emanating from a power substation

9F.8.1 Consideration of GPR exposure

GPR exposure to a commercial or industrial location should be considered under the following conditions:

a) The building location is recognized to likely experience a GPR. This includes where metallic links and electronic equipment connect to nearby buildings or buildings within a campus environment.

b) The building location (very rare) is subject to receiving high voltages transferred over metallic links from a distant (remote) GPR occurrence.

   1) In the planning stage, consideration should be given to an alternate facility location not subject to an induced surge from a GPR.

   2) A source of transferred GPR is subsequently placed near the facility. A typical source may be a power station or substation.

With lightning strikes (such as to a tall tower), a high-frequency l000 Hz to l00 MHz current flows through the grounding system structure and generates a high-frequency lightning-induced GPR. A lightning-induced GPR may last a very short time (50 ns to 10 ms). The typical GPR from lightning is estimated at from 7.5 kV ac to 15 kV ac. It should be noted that people and equipment most susceptible to lightning-induced GPR are found located where the grounding system is not as substantial as at a power station or substation, such as tall radio towers, E 9-1-1 locations, cellular radio sites, and microwave communication buildings.

 Copyright © 2006 IEEE. All rights reserved.

A GPR stresses the bonding, grounding, and electrical protection arrangement at the occurrence location. Bonding is utilized to ensure metallic systems and structures maintain the same potential throughout an event. Otherwise excessive currents will flow between these structures and systems, causing damages and equipment failure. Where interconnected by metallic links (such as telecommunications cable pairs), the GPR location can also stress the bonding, grounding, and electrical protection arrangement at the distant or remote location. This is the special case of transferred potential as defined in IEEE Std 80™-2000.

Two major categories for the cause of equipment damage from GPR are improper grounding and bonding and no special high-voltage protection applied at the GPR location. Undoubtedly, some telecommunications equipment damage from lightning events is mistakenly attributed to an incoming surge rather than the resulting GPR from the lightning event. In effect, the GPR damages the telecommunications equipment by dissipating from the grounding system up through the telecommunications electronics and out to a lower potential remote ground, likely made available through metallic interface ports. The standard protection devices (gas tubes, carbon block, solid state, etc.) for the interface ports become an electrical path between the GPR occurrence location and remote ground. These devices normally are placed at each end of an exposed cable telecommunications link (metallic link) and are designed to shunt foreign voltage impulses into the grounding system. Special high-voltage protection (HVP) devices, such as fiber-optic cables, optical couplers, and isolation transformers, are typically used to protect against GPR exceeding 1000 V peak asymmetrical.

9F.8.2 Codes and standards on ground potential rise

The following codes and standards should be utilized where GPR exposure conditions are expected or encountered:

a) IEEE Std 80-2000, IEEE Guide for Safety in AC Substation Grounding

b) IEEE Std 367-1996, IEEE Recommended Practice for Determining the Electric Power Station Ground Potential and Induced Voltage from a Power Fault

c) IEEE Std 487-2000, IEEE Recommended Practice for the Protection of Wireline Communication Facilities Serving Electric Supply Stations

9F.8.3 Influence from dc power sources

DC power sources within the building are primarily power conversion units for electronic equipment (converts ac input into low-voltage dc to power electronic devices). These units range from the large 48 V centralized dc power systems (CDCPSs) historically used by telecommunications utilities to power converters utilized at the rack and shelf level. DC power sources external to the building may include impressed cathodic protection systems (for corrosion control) and traction systems for transit systems. Cathodic protection systems are used to provide a constant low-current connection to various metallic ducts or other metallic structures in order to mitigate galvanic corrosion of the ducts and structures. Any dc equipment operating in the area can cause severe corrosion on the earth grounding system.

Traction systems, such as electrical trains, tram systems, and underground trains, can cause dc conducted interference on surrounding underground steel structures. In particular, the leakage current travels through the soil, where other metallic structures may be located. As these metallic structures have a lower electrical resistance than the soil, the leakage current flows in the metallic structures towards the dc supply station or substation.

DC fields greater than 500 milligauss are often strong enough to create image distortion on a video display terminal (VDT). In the presence of strong dc magnetic fields from sources such as MRIs, dc arc furnaces, building elevators, and subway trains, VDTs will likely exhibit distortion unless properly shielded.

Copyright © 2006 IEEE. All rights reserved.

9F.8.4 Electromotive force (EMF) from ac net currents and ac high currents

Image distortion on a VDT can also be caused by ac magnetic fields (EMF) as low as 5 milligauss. Most ac image distortion on VDTs is the result of elevated magnetic fields from 60 Hz power distribution equipment such as overhead power lines, transformers, switchgears, busways, and cabling. Smaller, more isolated magnetic field sources such as motors, office equipment, and adjacent monitors can also cause distortion when in close proximity to the victim VDT.

It is important to distinguish between EMF caused by circuit conductors being unduly separated (high current) and fields caused by grounded conductors being unduly paralleled (net current). Although the fields from a high-current conductor are fundamentally indistinguishable from those from a net current wiring error, the available mitigation strategies are quite different. Net current fields weaken directly with distance whereas transformer fields weaken with the cube of the distance (very fast). Shielding is ineffective for net current but is effective for a transformer. One way to show clearly the shape of the field and to identify the source is to take measurements with a gauss meter in a grid pattern throughout the room. Sources of the field are typically found to be transformers or switching cabinets, busses, or incorrectly wired circuits.

NEC violations can cause return current to travel on grounding conductors throughout the building. For example, at one location (see IEEE Std 446) the main distribution circuit had 140 A of net current. After completing the necessary corrections, the levels were reduced to 11 A. The wiring corrections reduced the net currents on the major circuits from the basement distribution and the fields on the upper floors. Remaining fields appeared to come from the vault and switchgear rooms below the space. Computer modeling showed current flows producing high levels of magnetic fields from an alternate, parallel neutral current path located between the utility-owned transformer and network protection vault and the neutral-to-ground bond in the building's main distribution equipment. Approximately 40 A of neutral current flowed on the building steel components between the transformer/network protection vault ground point and the main distribution equipment neutral-to-ground point. After reconfiguring the grounding electrode system, the 40 A originally running on the ground system was reduced to 4 A.

9F.8.5 Intersystem ground voltage (noise) and ground loops

Interconnected ITE units are sometimes powered (and grounded) by different electrical panels within the same building or from panels in a different building. Depending on local or national electrical codes, many different wiring systems are possible between separate panels. This arrangement can allow both steady-state and dynamic ground voltage differences to exist between panels, especially during surge events. These surge events include nearby lightning strikes causing a local GPR, lightning-induced currents in ground loops such as building frame members, power fault currents (breaker tripping) in apparently unrelated buildings or circuits, or nearby electrical repair work such as arc welding.

Where ITE equipment is interconnected via metallic links (such as RS-232 data lines), the electrical power and grounding topology can lead to a performance conflict sometimes known as a *ground loop*. See Figure 9F-3 and Figure 9F-4. In this situation, every interconnected device has two connections attempting to establish the common reference voltage for data communications signaling. One is the common (signal reference) wire in the data line. The other is the device's EGC (green wire) of the ac power circuit.

 Copyright © 2006 IEEE. All rights reserved.

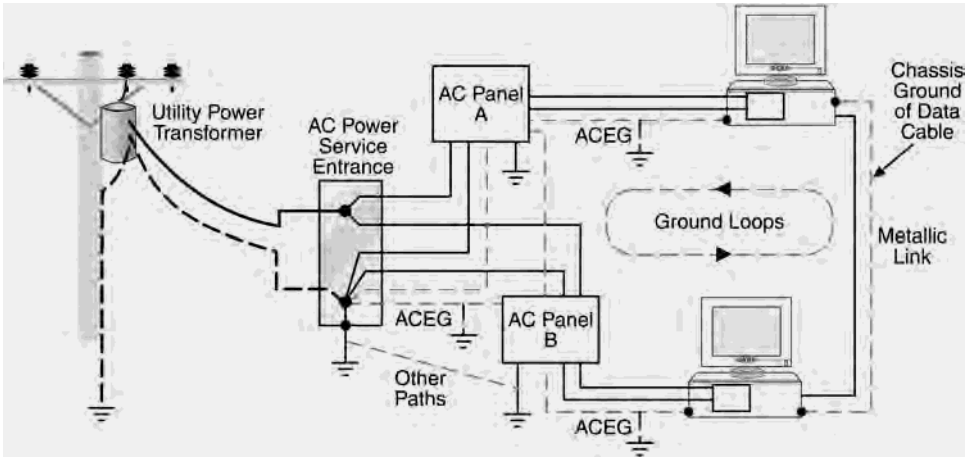

Courtesy of SPGS, Inc.

Figure 9F-3—Example of intersystem ground noise within the same building

For personnel safety, metallic devices such as RS-232 connectors and printer ports are considered to be exposed metal parts. For this reason, the voltage at any connector pin must present a small or zero voltage with respect to safety ground. In virtually all ac powered telecommunications, the CPU common wire (or ground reference) is connected to the EGC (and the metallic enclosure) of the equipment. This resulting ground loop can lead to dynamic voltage differences being developed between the interconnected devices. The voltage can easily exceed the data cable safety voltage rating. Destruction of data interface drivers and printed circuit boards (PCBs) can result. Another common side effect is heating of the data cabling (cable becomes warm or hot to the touch), resulting in possible signal corruption and damage to hardware.

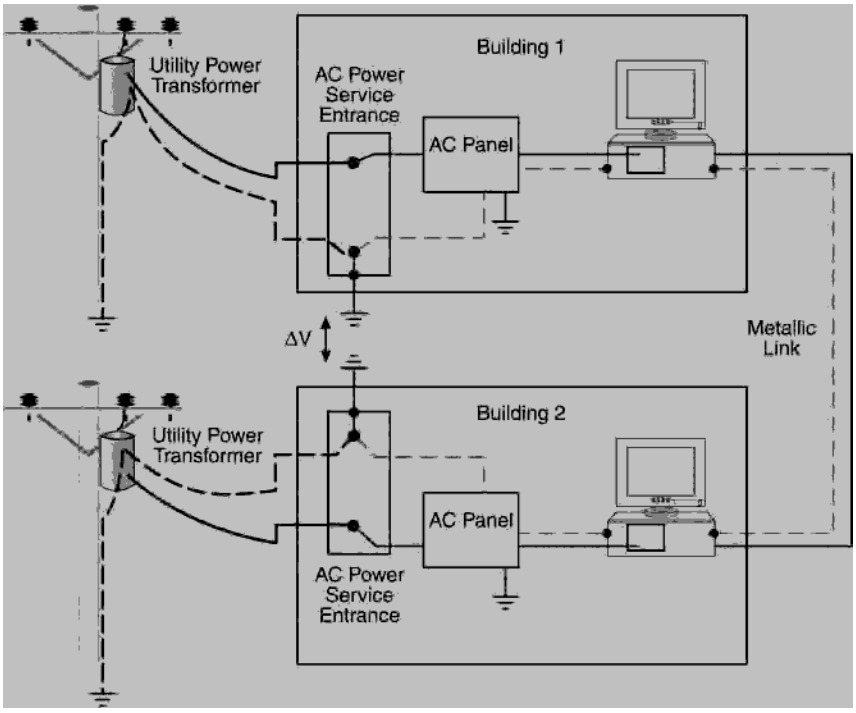

Courtesy of SPGS, Inc.

Figure 9F-4—Example of intersystem ground noise between different buildings

Copyright © 2006 IEEE. All rights reserved.

Induced lightning is a common and damaging form of ground loop voltage and noise. In this case, the ground loop acts as a loop antenna. A large circulating current in the ground loop can be created. This current may cause the voltage difference between the common reference points on interconnected devices to exceed the safety voltage rating. Damage to the data interface driver cards is common, and propagation of the damage into the PCB is possible. The area of the ground loop controls the magnitude of the problem. In rare circumstances, other types of equipment may create electromagnetic pulses, which are picked up by the ground loop (such as NMR/MRI imaging machines).

Intersystem ground noise cannot be experienced by ITE equipment under the following topologies:

a) The equipment is not interconnected via metallic links.
b) The equipment is interconnected by decoupled metallic links to other equipment. Optical coupling devices readily accomplish decoupling.
c) The equipment is interconnected by metallic links to other equipment in the same cluster or bonding network, and the entire cluster or bonding network is single-point grounded and otherwise insulated from all other grounds.

SPDs sometimes divert (shunt) noise and surges onto the grounding wire, resulting in voltages on the grounding wire. In effect, SPDs can contribute to intersystem ground noise.

Intersystem ground voltage differences should not be confused with other power problems such as common-mode noise, normal-mode noise, EMI, or RFI. It is possible for telecommunications equipment to experience severe common-mode noise while not experiencing intersystem ground noise, and vice versa. These two problems are completely independent. The NEC permitted IGR circuit will not remedy common-mode noise and is only marginally suitable (under ideal conditions) to remedy intersystem ground noise. See 8.5.1 and 9F.8.5.

Susceptibility to intersystem ground noise cannot be prevented by power protection equipment such as isolation transformers, line conditioners, or filters. Mitigation for intersystem ground noise involves breaking the ground loops between interconnected ITE equipment. Ground loops can be readily remedied by placement of optical coupling devices into the metallic communications link.

9F.8.6 Common-mode noise

Common-mode noise is any unwanted signal that is common to all circuit conductors simultaneously with respect to ground. The difference in potential between neutral and ground is frequently mistakenly identified as one form of common-mode noise. Neutral-to-ground potentials may be common-mode noise in specific instances. However, the most common measurement is the neutral conductor voltage drop on a grounded neutral system. In grounded neutral 3-wire single-phase and 4-wire three-phase circuits, these voltage potentials are not identical on the phase conductors nor are the waveforms identical on all conductors with respect to ground. Therefore it cannot be common-mode noise. Common-mode noise is also frequently mistakenly confused with intersystem ground noise, a distinct problem that can cause ITE equipment damage and data errors.

Wiring layout can influence commode-mode problems. In most electrical conduits or raceways, multiple individual conductors are used instead of manufactured cable. Thus, the position of an EGC (green wire) relative to the power conductors is random. Whenever the EGC is not equally spaced between the power conductors, the magnetic fields associated with the currents flowing in the power conductors will not be balanced in the ground conductor. The net magnetic ac field will induce current into the EGC if it is part of a complete path along which the current can flow (ground loop).

SPDs sometimes divert normal-mode noise and surges into the neutral wire, resulting in voltages on the neutral wire. More correctly they are induced surge voltages on the neutral wire.

 Copyright © 2006 IEEE. All rights reserved.

9F.8.7 Electromagnetic influences

In a typical telecommunications or equipment room there are many different pieces of electronic equipment that are interconnected with data and power cabling. It is important to minimize the chance of interference between installed equipment, the supporting infrastructure, and interconnecting cabling.

In the equipment room environment, EMI can couple itself onto data lines and corrupt data packets being transmitted on that medium. This may cause corruption of the data that is being transmitted and stored. If the corrupt data is an address bit, or part of a computer command, it can cause "hanging" within a computer system or storage array.

The coupling path for EMI can be radiated or conducted as described in Chapter 4.

9F.8.8 Related industry practices and methods

There are several telecommunications industry practices that relate to controlling electromagnetic influences, as follows:

a) Equipment that is FCC Part 15 Class-A compliant ensures that it will contain radiated or conducted EMI within specified limits for the commercial environment. Note that Class A equipment is allowed to radiate nearly ten times more than Class B (residential) equipment.

b) IEC 61000-4-8:2001 is an international standard that limits the electromagnetic radiated field strength of equipment that is used in conjunction with a video monitor.

c) NEC Section 800-52 requires that data and power cables be separated by a barrier when sharing a raceway, compartments, or boxes.

d) ANSI/TIA/EIA J-STD-607-A states that cable installed in a fully enclosed grounded metallic raceway or installed close to a grounded metallic surface will limit radiated field noise coupling.

e) BICSI publishes the *Telecommunications Distribution Methods Manual,* 10th edition [B9]. The TDM Manual provides discussion of applicable industry documents and lists methods to reduce the effects of EMI to telecommunications cabling and equipment in a commercial building.

9F.8.9 Field strengths

According to TIA PN-3-3283-RV2, under normal operating conditions, most telecommunications terminal equipment can be expected to encounter electromagnetic field strengths of 3 V/m (rms) or less in the frequency range of 150 kHz to 150 MHz, and conducted RF signals on the telecommunications line and power line of 3 V (rms) or less in the frequency range of 150 kHz to 30 MHz. The RF immunity test methods and performance criteria are contained in TIA 631-2002.

9F.8.10 ESD, RFI, EMI

ESD, either directly to equipment or indirectly to some nearby object, can be a significant cause of equipment failure or malfunction. In a network, the adverse effects of ESD on one piece of equipment can propagate to others connected to the network. Equipment can be susceptible to ESD effects at all stages of storage, installation, testing, operation, adjustment, maintenance, and repair. An electrostatic charge may be developed on the human body, furnishings, and other objects as a result of everyday actions and activities. The simple act of walking on a carpet or other insulating flooring material can cause a charge to build-up on an individual. The rolling or sliding of furnishings such as carts and chairs across the floor, as well as contact with synthetic fabrics used in clothing and furniture upholstery, can generate large electrostatic potentials. Connecting ubiquitous handheld telecommunications devices to network ITE serial ports can transfer an ESD and possibly damage the serial port.

Copyright © 2006 IEEE. All rights reserved.

Another more subtle source of ESD is from charged cabling. The IEEE 802.3™ series standards identify this problem, but do not provide any guidance or testing methods for manufacturers. Generally, users become a source of ESD to the cabling (which is of course totally immune to ESD), and the charged cabling then becomes a source of ESD to the communications equipment. Cables can acquire a charge during installation when they are unreeled from a cable reel or dragged across a floor. If the cables are not connected to earth ground, the electrostatic charges can remain for a long time, especially in dry conditions.

RFI and EMI are considered ubiquitous enough that telecommunications specifications for commercial buildings may address the issue boldly with wording such as:

> Due to RFI and EMI the telecommunications spaces shall not house any electrical equipment (i.e., step-down or step-up transformers, breaker panels). The equipment room shall be in a location where EMI is minimal.

RFI and EMI can appear to be selective to the environment. Consider the following case reported by EPRI:[13]

> "After inspecting several hardware components, the crew discovered a defective hot-line clamp. The hot-line clamp—a mechanical device used to connect the primary of a service transformer to the high-voltage power line—was cracked internally. A high-voltage arc developed across the crack and generated high-frequency electromagnetic energy, propagating radiated emissions into the air and conducting emissions down the power line. These emissions permeated the entire neighborhood, but generally went unnoticed except for passing motorists losing AM radio reception momentarily. The electronic patient wandering system at the assisted-living center suffered the only significant effects of the interference."

9F.8.11 EMI in telecommunications spaces and server farms

Significant EMI is known to exist in server installations (see the NEC). Most EMI in server farm installations is produced by human activity. ESD events from charged cables can damage ITE as the charged cables are plugged into the ITE equipment. Normal maintenance operations such as plugging-in cables and using tools can produce significant EMI from ESD events. Using tools and cables can generate substantial EMI at relatively low ESD voltages but substantially less than the level of human perception at 3 kV.

Consider the following examples of EMI and ESD reported occurrences at server farms:

a) The radiated field from a person charged to 1 kV, holding a screwdriver, and then touching the screwdriver to the server chassis measured nearly 30 V/m.

b) A person closed a door a few meters from the measuring antenna. The charge on the person measured only 1000 V, yet the recorded field reached about 15 V/m.

c) A mobile hoist used to lift servers onto shelves touched the large metal cabinet of some environmental control equipment and caused a very large and fast rise time voltage transient. The problem here is that such an event may happen regularly as the hoist travels down the rows of servers. In such a case the distance to the servers would be less than 1 m (3 ft), leading to much higher field strengths that the recorded ~5 V/m.

9F.8.12 AC power filter capacitor noise from unbalanced power systems

The nature of the unbalanced power (grounded conductor) delivery within the commercial and industrial building results in significant EMI/RFI made available on the grounding system. Susceptible electronic equipment can be adversely affected. An example of susceptible electronic equipment is A/V equipment.

[13]K. Phipps et al., "Diagnosing and Resolving EMC Problems," *Power Quality Magazine,* April 2001.

 Copyright © 2006 IEEE. All rights reserved.

The unbalanced system inherently produces undesirable current onto the grounding system. The filter capacitors inject current into the ground from the hot side of the ac mains. See Figure 9F-5.

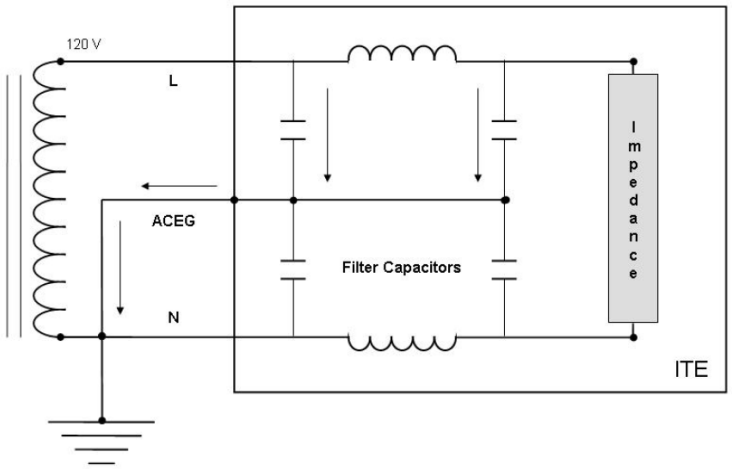

Reprinted with permission from EquiTech Corporation.

Figure 9F-5—120 V ac unbalanced power system

9F.8.13 Influence from telecommunications systems operations

Telecommunications equipment arranged into a large system can influence that system and other systems to which it is metallically interconnected. Influences include the following:

a) Transients occurring on the 48 V dc centralized (or otherwise shared) power distribution rail of dc powered telecommunications equipment.

b) Unplanned paths being used to return dc back to its power source. This can occur when the dc powered telecommunications equipment is arranged with the dc Return bonded to the DCEG at the equipment. This configuration is known as dc-C. See 9.9.

c) Violations of a specific grounding and bonding topology (especially in co-located arrangements). The topologies most commonly violated (either intentionally or unintentionally) are the IGR ac circuit and the IBN for dc powered large telecommunications systems.

9F.8.14 Protective device operating transient

For 48 V dc powered telecommunications equipment, the severity of the voltage transient available at the equipment 48 V dc power input terminals is affected by factors such as the following:

a) The impedance of the power distribution system (both primary and secondary, as applicable)

b) The impedance from the dc power interface point to the input of the point-of-use dc-to-dc converter

ANSI T1.315-2001 describes a *protection device operating transient,* which is typically used to test new TSP network equipment to ensure its operational robustness. See Figure 9F-6. This transient is only applicable to the 48 V dc power input to the telecommunications load equipment. A protection device operating transient results from a low-impedance short to ground on the equipment side of a protection device (fuse or circuit breaker) connected to a distribution rail. The rail voltage is reduced due to the high current flowing to ground through the protection device and the short to ground. When the protection device opens, the release of energy stored in the inductance of the rail causes a high-voltage overshoot with an initial short interval followed by a lower voltage overshoot having a longer interval before returning to the steady-state rail voltage.

Copyright © 2006 IEEE. All rights reserved.

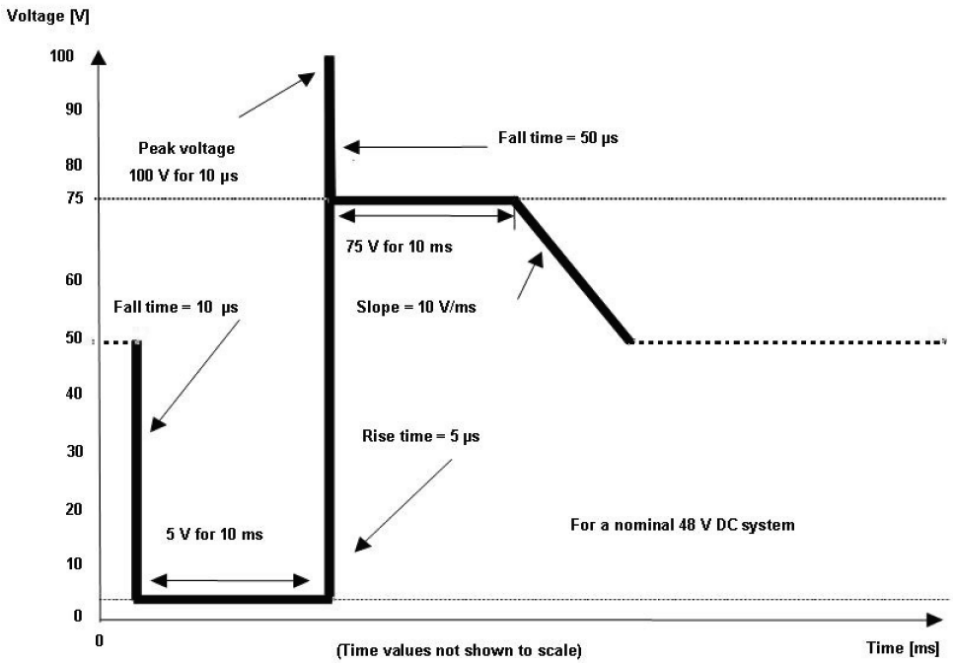

Adapted with permission from Emerson Network Power.

Figure 9F-6—ANSI T1.315 described total protection device operation transient

The ANSI T1.315 described transient is a complex waveform that is intended to represent conditions occurring during a short circuit protected by a fuse or a breaker. The ANSI T1.315 complex transient waveform is comprised of separate test segments: impulse transient, overvoltage transient, and under-voltage transient.

9F.8.15 DC leakage current

NOTE—In this recommended practice, dc not contained in an engineered closed path is deemed leakage current to avoid confusion with the term *stray* current often used to describe a similar situation with ac. This distinction is important when discriminating between ac and dc found on grounding and bonding conductors during a grounding evaluation or audit.

For safety reasons, UL 60950-2000 only permits the dc-C telecommunications equipment grounding configuration in RAAs. Unplanned paths used by the dc-C return circuit can be any parallel circuit, such as the following:

a) Building steel

b) Metallic conduit

c) Metallic equipment racks, cabinets and duct work

d) Metallic water piping

e) Any metallic component of the building's grounding electrode system (as described by the NEC)

f) Metallic cable shields (even to other interconnected buildings)

g) Earth

h) AC circuit EGC (ACEG)

i) Metallic gas piping

 Copyright © 2006 IEEE. All rights reserved.

j) Other EGCs and dc Return conductors (if also dc-C) of other telecommunications equipment—anywhere in the building

9F.8.16 Violations of specific grounding topologies

The IGR circuit is often compromised when used for networked equipment. Usually, the compromise involves regrounding the IGR by means of a remote ground connected through a metallic communications link (such as RS-232). Consequently, the supposed "reduced electromagnetic interference" described by the NEC is not realized. Further, common-mode noise available at the power source for the IGR circuit is simply propagated to the telecommunications equipment and this "electromagnetic interference" is not reduced. Further, during surge events the insulated (isolated) equipment ground provided by the IGR circuit can be significantly elevated from any nearby metallic structures, resulting in a safety concern.

Where the IBN telecommunications topology is deployed, a controlled operation is mandatory. For example, it is quite easy for an unknowing technician to compromise the integrity of the IBN while installing new equipment or circuits—especially in a co-located arrangement. The IBN is designed for robustness and field proven to be quite robust to lightning and other surge events. TSPs significantly utilize IBNs. Depending on the type and location of a grounding violation within the IBN, the susceptibility of the telecommunications system can be substantially increased. For this reason, grounding integrity monitoring systems (with alarm notification) is a recommended practice.

Copyright © 2006 IEEE. All rights reserved.

Annex 9G

(informative)

Impact of technology convergence on ac and dc powering

Most ITE requires ac input power, just as most telecom equipment requires 48 V dc input power. Today, some telecommunications equipment is offered with a choice of either ac or dc input power at the time of ordering. The mix of ac vs. dc powered equipment usually dictates the power system configuration. Generally, the primary use of a facility will dictate whether ac or dc will provide higher compatibility. Circuit-switched telecommunications electronic equipment, such as voice switches for copper wire, is traditionally designed for dc use. Packet-switched telecommunications electronic equipment, such as servers, storage, routers, etc., is traditionally designed for ac use. The overwhelming use of packet-based equipment in equipment rooms suggests that compatibility will be much higher with an ac system. Obtaining dc versions of many products, such as monitors, storage appliances, or PCs, is virtually impossible. The use of dc for equipment room power seriously limits the types of telecommunications electronic equipment that can be used. In most cases operation is not practical without adding a supplementary ac power system.

The convergence of telecommunications and IT equipment having both ac and 48 V dc power requirements provides new challenges. Conventional ac UPS or 48 V dc power system configurations may not be the most appropriate approach to powering today's telecommunication equipment, particularly for typical Internet applications where there are high load power densities, a codependency of the ac and dc powered load equipment, and a mixture of loads with the majority having ac input power requirements.

It is likely that the critical electronic loads in any one facility will require both 48 V dc power and one or more of the commercial ac power voltages. Systems are often such that both types of loads are required for the site to remain operational. In other words, the site cannot operate unless both the dc and ac powered loads are operational. This codependence demands equally high reliability and availability for the dc and ac power systems Alternative configurations may be needed to achieve cost-effective power systems that have the reliability, availability, and maintainability to meet today's business requirement for nonstop processing. For Internet applications, an accepted approach is the hybrid distributed redundant power system. See Figure 9.21. This system features battery-less point-of-use rectifier systems that are powered from dual, independent UPS power systems, with short duration battery reserves supplemented by permanently sited, redundant standby engine-generator systems.

Where the equipment comes with a choice of ac or dc input power requirements, the percentage mix of the input power requirements becomes a variable, depending on the particular site and equipment selection. Typical Internet hosting sites and server-based telecommunications sites have been observed to have a mix of ac powered loads in the range of 85% to 95% of the total electronic load (kilowatts) with only 5% to 15% of the total electronic load (kilowatts) being dc powered. The size of typical sites tends to be in the 10 000 ft^2 to 100 000 ft^2 range with power densities of the electronic load.

With these requirements, the critical power system sizes tend to fall in the range of 350 kW to over 8 MW. At 48 V dc, these power levels equate to 7 000 A to over an astounding 160 000 A. At 480 V ac three-phase, these same power levels equate to a more manageable 420 A to over 9 600 A. Controlling voltage drop in 48 V dc power systems at the higher power levels becomes extremely difficult and expensive. Clearly, larger power systems favor the higher voltage ac power distribution systems or dc power systems located very close to the load equipment.

Both traditional telecommunications facilities and traditional facilities generally include other critical support equipment, such as lighting and air conditioning equipment, that also must be available for reliable

 Copyright © 2006 IEEE. All rights reserved.

operation of the telecommunications or IT equipment. These systems generally can tolerate brief interruptions in power without adverse consequences on the telecommunications or IT equipment operation. How these other critical support systems are powered depends on the susceptibility of these support systems to momentary power failures and the availability of engine-generator power systems. For traditional telecommunication power systems without permanently sited engine-generator systems, it is common to have these miscellaneous support loads powered from inverters that are connected to the 48 V dc power system. For traditional power systems, these miscellaneous support systems are powered either from commercial ac power (when there is no permanently sited engine-generator and only orderly shut-down time is required) or from commercial ac power and the permanently sited, engine-generator back-up ac power system (when extended run time is required).

Copyright © 2006 IEEE. All rights reserved.

Annex 9H

(informative)

Factors in selecting large-scale ac and dc power

Factors affecting the selection of large-scale UPS and dc power systems include tradition, differences in tradition, generators and batteries, achieving high-availability UPS, the topology of the UPS, and concern over efficiency of conversion. Most installations use ac distribution. However, during the late 1990s, various manufacturers and engineers suggested that a change to dc distribution was advantageous and predicted a widespread adoption of a dc standard for data center power. In fact, the opposite has occurred, and the usage of dc relative to ac has declined.

9H.1 Traditional ITE and telecommunications powering schema

Traditional ITE requires ac input power, generally matching the commercially available ac power source configurations, typically 120 V, 208 V, or 240 V single-phase ac in 60 Hz countries and 220V to 240 V single-phase ac in 50 Hz countries. For example, most entry level and mid-range servers for office use are configured and shipped with 120 V plugs but are designed to accept any voltage worldwide, including 120 V and 208 V. Larger pedestal servers and rack-mount servers tend to be configured with 208 V plugs. Traditional IT power systems include the use of ac UPS systems with battery systems sized to provide either the necessary time for an orderly shutdown or time to reliably get standby engine-generator power systems on line. Virtually all critical IT facilities include permanently sited engine-generator systems and their associated automatic transfer switches to protect against sustained commercial ac power system failures. Figure 9H-1 is an example of a typical traditional IT power system using ac UPS systems to support the critical-load equipment.

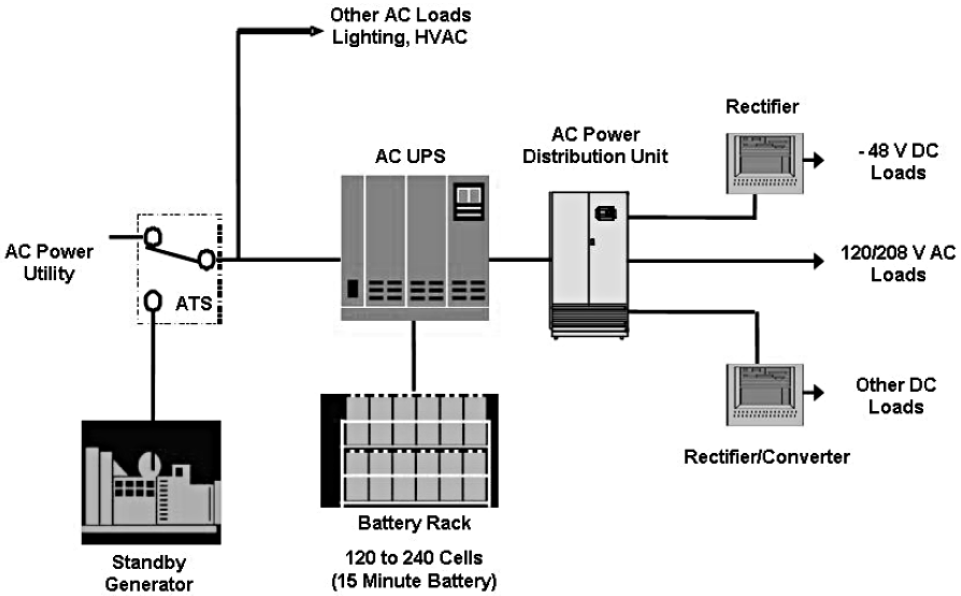

Reprinted with permission from the Liebert Corporation, with some modification from the Emerald Book Working Group.

Figure 9H-1—Traditional ITE facility (data center) power system

 Copyright © 2006 IEEE. All rights reserved.

As described in Chapter 8, ITE rooms likely use commercially available packaged PDUs to distribute ac power to the various load equipment. The PDU performs the conditioning, distribution, and monitoring of power for the load equipment. The 480 V ac outputs of typical large UPS systems are distributed to a number of PDUs located throughout the data center. The PDU typically contains an isolation transformer (to provide voltage step-down to 208/120 V ac, common-mode noise isolation, local voltage adjustment, and ground referencing) and output distribution panelboards with output circuit breakers, cables, and receptacles to match load equipment requirements. The PDUs are intentionally located close to the load equipment to minimize the output distribution circuit length and voltage drop.

Traditional telecommunications equipment generally requires 48 V dc input power. Traditional telecommunication power systems consist of multiple parallel-redundant rectifiers that convert commercial ac power to 48 V dc that charges lead-acid storage batteries and supplies power to the critical-load equipment. When other voltages are required, converters or inverters are used to derive the other required voltages from the 48 V dc power plant. Long battery support times are required to support the critical-load equipment in case of commercial ac power failure or rectifier failures. Sometimes engine-generator systems are used to supplement the commercial ac power system to supply ac power during sustained commercial power system failures. Traditional telecommunications battery support times range from a minimum of 1 h to over 24 h, with typical battery support times being 3 h to 8 h. Figure 9H-2 is an example of a typical traditional telecommunications power system using rectifiers and 48 V dc battery systems to support the critical-load equipment.

Telecommunications system central offices have historically exhibited much higher availability than networking rooms (equipment rooms) and data centers. DC power distribution design affects the reliability, survivability, and robustness objectives of the complete telecommunications system. Naturally there is a desire to duplicate this level of availability in commercial telecommunications and networks. However, analysis of the downtime for equipment (networking) rooms and data centers indicates that the fundamental difference between networking rooms and the telecommunications central office is the stability of the environment. Presently, the average life of equipment in a network room is about two years and configuration changes happen on a continuous basis. The unforeseen consequences of the constant changes to the system, along with mistakes made while making changes, give rise to the vast majority of downtime. Key advantages in the telecommunications central office are the limited number of people with access to affect the system, and the structured and standardized nature of the system. The general absence of a raised access floor, the (usually) lower power density, and the common use of convection cooling are fundamental reliability advantages of the central office.

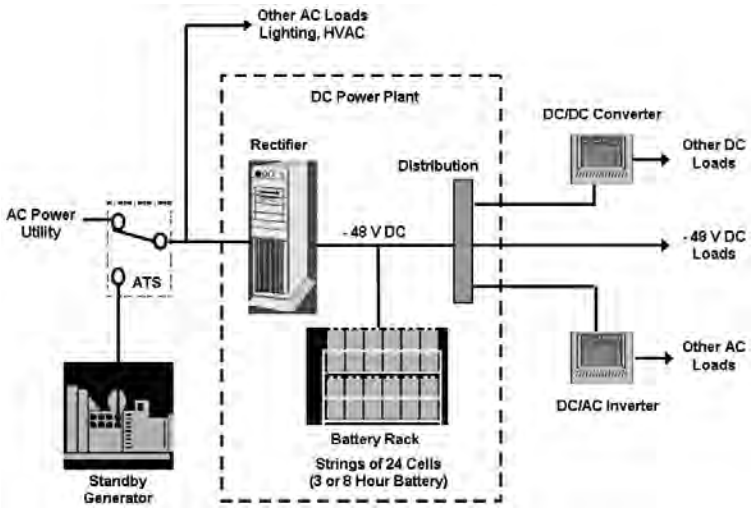

Reprinted with permission from the Liebert Corporation, with some modification from the Emerald Book Working Group.

Figure 9H-2—Traditional telecommunications facility (central office) power system

Copyright © 2006 IEEE. All rights reserved.

9H.2 Differences in tradition

DC power systems use 48 V dc battery plants with long duration back-up times (low rate of discharge). DC power systems use only 24 cells in series and are applied at a relatively low discharge rate. Further, the end-of-discharge and float voltages are carefully controlled. On the other hand, ac UPS systems typically use 120 to 240 cells in series and are applied at very high discharge rates (10 min to 20 min back-up times) and deep discharge voltages down to 1.65 V per cell or even lower.

DC power systems do not always include permanently sited engine-generator systems. When they are included, regular maintenance and testing of them are often lacking. Further, since the rectifier must also be operational to utilize the engine-generator output, there is a serial dependency with reduced observed reliability. High-availability ac power systems routinely include large, permanently sited, redundant engine-generator systems that are carefully maintained and regularly tested to assure availability when needed. The ac load equipment can utilize the output of the engine-generator even when the ac power conversion equipment is not operational (in bypass).

The unavailability of the dc power system is dependent on the size of the battery plant. In the case of dc power systems, the mitigating factor for reliability is the battery being directly connected to the load bus. For ac UPS systems, the mitigating factor for reliability and availability is the ability to provide an alternate source of power with the UPS bypass circuit. Despite the philosophical differences in powering perspectives, both the ac and dc powering approaches are feasible, and both, when implemented properly, have been demonstrated to be very reliable.

9H.3 Generators and batteries

The dependability of standby engine-generators is dependent on their careful application, installation, testing, and maintenance. Large IT sites have proven the dependability of engine-generators. With the convergence of telecom and ITE, the codependence of ac and dc powered critical loads in a facility necessitates a reliable and dependable standby engine-generator system. Otherwise, the facility with extended dc power battery back-up time is limited by the shorter ac UPS battery backup and other infrastructure support equipment, such as equipment cooling equipment. One criterion in the selection of battery back-up time for both ac and dc back-up power systems is the economies of generator costs vs. additional battery costs. With UPS systems, 15 min or lower battery support times can be reliably achieved because the UPS inverter has the ability to regulate the variable voltage of the battery during discharge, and redundant generator systems can reliably provide an alternate source of ac power within 20 s.

The economies of scale favor engine-generator systems, making larger engine-generator systems much more economical than long duration batteries. Long duration batteries are more economical for smaller power system sizes of 25 kW and lower. For smaller power systems, long duration batteries have smaller footprints than engine-generator systems, and for larger power systems, engine-generator systems have smaller footprints than long duration batteries. Generators and battery systems both need proper maintenance and testing to be reliable. Generator systems are expected to have much longer service lives than lead-acid batteries.

9H.4 High-availability UPS

Availability for UPS systems can be characterized by the following.

 Copyright © 2006 IEEE. All rights reserved.

9H.4.1 Reliability

The individual UPS modules, static transfer switches (STSs), and other power distribution equipment must be incredibly reliable. In addition, the system elements must be designed and assembled in a way that minimizes complexity and single points of failure, as follows:

a) *Simplicity*—All else being equal, a simpler system will be more reliable.

b) *Battery management and maintenance*— Battery reliability is a key factor in UPS system reliability. The UPS topology should minimize stress on the battery system and minimize the number of events that force the UPS to consume battery power.

9H.4.2 Functionality

The UPS functionality must be evaluated against the requirements of the expected load. The following are important items for consideration in selecting a UPS:

a) Range of protection against power disturbances

The UPS must protect the critical load against all conceivable types of input power disturbances that the load cannot tolerate. The vast majority of ITE loads are powered by switch-mode power supplies or power factor corrected switch-mode power supplies. These power supplies are both voltage and frequency tolerant, i.e., they can typically withstand wide voltage fluctuations, frequency deviations, and power disruptions of up to 20 ms.

b) Electrical isolation

Electrical isolation may be desirable depending on the specific loads and their susceptibility. A UPS output isolation transformer contained within the UPS system is one accepted method of providing this isolation. Usually it is desirable to locate the electrical isolation or transformer as close as possible to the critical load. With the current trend in data center and ITE load distribution systems, the transformer is typically located at the point of branch circuit distribution. An example is the isolation transformer most commonly found in PDUs. Redundant isolation is of very little benefit and can greatly increase the capital expenditures and cost of installation.

c) Generator compatibility

In critical facilities, an engine-generator typically provides long-term outage protection to supplement the UPS's short-term outage protection. When the customer load increases sharply, both the frequency and voltage of the generator may fall out of specification for a short period. A well-designed UPS can operate successfully under these circumstances. The UPS input power factor and input current total harmonic distortion (THD) can be critical factors in determining compatibility of the UPS with the engine-generator. Ideally the UPS would appear to be a resistive load. Large UPS systems should have linear "walk-in" or ramp-up of input power. These desirable UPS features greatly enhance the ability of the generator to accept the UPS as a load and assure system compatibility.

d) Electrical infrastructure design

The UPS should also be evaluated for power factor and input harmonic current distortion and its potential impact on the entire upstream power system design and not just compatibility with the engine-generator. Large UPS systems with poor input power factor or high input current THD may force overdesign of the upstream infrastructure and financial penalties could possibly be levied by the supplying utility company. Ideally the UPS should be benign to the facility electrical environment, i.e., it should solve power problems without creating new ones.

Copyright © 2006 IEEE. All rights reserved.

9H.4.3 Maintainability

The system design must permit concurrent maintenance of all power system components, supporting the load with part of the UPS system while other parts are being serviced. True maintainability is a function of system redundancy options, but all UPS systems should have some internal or external maintenance bypass capability.

NOTE—All UPS equipment and switchgear, regardless of manufacturer, should be completely de-energized for preventive maintenance at least once per year. Depending on some designs, the resulting scheduled downtime limits the availability of the power system. Deferred maintenance is *not* the same as high availability.

a) Dual-bus compatibility

Dual-bus power systems feature two or more independent UPS systems powering two or more independent power distribution systems. Each item of load equipment, then, has access to both power distribution systems. Loads with dual power cords can directly utilize both systems. Single-corded loads require an upstream STS, so they can be switched between distribution systems should one falter. However, these load transfers cannot be made unless the UPS systems are synchronized under all conditions, including on-battery operation. Certain UPS single-phase UPS topologies cannot sync to anything except their own input sources.

b) Concurrent maintenance

The ideal situation is to be able to service portions of the UPS system while other portions continue to provide conditioned power to the connected load. A multimodule, parallel-redundant system enables a certain amount of concurrent maintenance on the UPS power modules. However, even a multimodule system needs to be completely powered down at least once per year for maintenance extending back to the building service entrance. Only a dual-bus system enables 100% concurrent maintenance, since one entire UPS and distribution system can be powered down while the other supports the critical load with conditioned power.

c) Internal and external maintenance bypass circuits

Every UPS needs to be de-energized for periodic maintenance and repairs. All three-phase UPS products should have some type of internal or external maintenance bypass circuits, to enable the load to operate on unconditioned utility (or generator) power while the UPS is removed from service. These circuits typically include the internal bypass static switch plus either internal or external switches, contactors, or circuit breakers. These switching devices must work in concert to reliably transfer the load between the bypass line and the UPS inverter output, and back again when required. In addition, high-availability systems should have external “wraparound” maintenance bypass cabinets, panelboards, or switchboards to allow the UPS to be completely de-energized for annual preventive maintenance.

9H.4.4 Fault tolerance

The system must have fault resiliency to cope with a failure of any power system component without affecting the operation of the critical-load equipment. UPS internal topology is the primary determinant of system reliability and functionality.

a) *Single vs. dual input.* A single-input UPS is simpler to design and install, but is less fault tolerant than one with separate inputs for rectifier and bypass. The input breaker or contactor of a single-input system can be a single point of failure. Likewise, feeding both the rectifier and bypass inputs from the same *automatic transfer switch* introduces a single point of failure.

b) *Internal fault tolerance.* The UPS internal design must be rugged enough to handle input faults, load faults, temporary overloads, and input power disturbances.

c) *Single points of failure.* It is inevitable that components inside and outside the UPS will eventually fail or wear out. The UPS must be designed to protect the load through any known failure mode and transfer to bypass, if necessary, should a failure occur.

 Copyright © 2006 IEEE. All rights reserved.

9H.5 UPS topology (including small scale applications)

See Chapter 7 and Chapter 8.

9H.6 Efficiency of conversion and distribution

One of the arguments often posed in favor of dc over ac power is that it is more straightforward with fewer power conversions. The ac power is converted to dc in the UPS to charge the batteries and power the inverter; the inverter converts dc power to ac power, which is supplied to the load equipment that takes the ac power and converts it to dc power. For dc power systems, ac power is converted to dc by the rectifiers and is supplied directly to the dc powered load equipment. However, this simplistic view ignores the fact that the electronic load equipment uses power converters to convert the 48 V dc power to the other required voltages for the particular electronics, which include a variety of regulated dc voltages other than 48 V dc. Further, the apparent efficiency advantage of a dc powering approach is not typically realized. The ac-to-dc efficiency of multiple relatively smaller rectifiers of the typical dc power system is in the range of 89%, whereas large UPS systems have typical ac to ac power conversion efficiencies in the range of 92% to 94%. The efficiency of the power supplies in the electronic load equipment with either ac or dc input power is approximately the same. Therefore, the overall system efficiency from the utility ac input to load equipment output for a comparable ac UPS system or dc power system is nearly identical.

To deliver the same power, distribution of dc voltage is done at currents approximately four times higher than used for ac distribution. Distribution loss varies with the square of the current; therefore the size of copper used for dc distribution is 16 times the copper used for ac for the same loss. Such severe oversizing is not typically implemented, and instead, additional losses are accepted. AC has the disadvantage that in some cases the ac voltage must be transformed, such as in some locations in North America where a transformer is used to convert 480 V to 230 V, whereas a dc plant can run directly from 480 V. In these cases, the ac distribution loss will be higher. However, in the vast majority of cases, ac distribution efficiency is higher because of the added copper losses in the dc system.

Copyright © 2006 IEEE. All rights reserved.

Annex 9I

(informative)

Highlights of ANSI T1.311 requirements for dc power systems

ANSI T1.311 provides requirements for equipment and components for centralized dc power plants. These requirements apply to both traditional (open units) and modern (enclosed modular) architectures. Not all requirements will be applicable to each type of architecture. For context, clarity, and assured understanding, see ANSI T1.311. For highlights of ANSI T1.311 requirements, see Table 9I-1 and Table 9I-2.

Table 9I-1—Highlights of ANSI T1.311 requirements for dc power distribution

Item	RequirementS for dc power distribution
1.	Circuit breakers, fuses, fuseholders, and adapters shall be third-party certified. Generally, fuses shall not be connected in parallel.
2.	Paralleling multiple poles of a circuit breaker shall be allowed only if third-party certified.
3.	Wire and cable conductors shall be terminated using third-party certified crimp (irreversible compression-type) or mechanical-type terminals or lugs.
4.	Power conductors shall be tapped using approved methods.
5.	Switches and circuit breakers shall be mounted on a panel or in an enclosure.
6.	Conductors and bus bars in power boards shall be protected, by location, from physical damage and shall be held firmly in place.
7.	The sum of all connected distribution-circuit currents shall not exceed the current rating of the power board.
8.	The power board structure and panels shall be designed to support electrical components and shall be fabricated from fire-resisting materials.
9.	Markings and colors should comply with regulatory standards, e.g., OSHA.
10.	Uninsulated bus conductors shall be permanently and visibly marked to indicate polarity.
11.	Whether used as a single conductor or in multiconductor cables, ungrounded conductors shall be distinguishable from grounding and Return conductors by markings at their terminations.
12.	Return conductors may have a disconnecting device connected in series, provided that the device is a multiple-pole device synchronized to break all conductors of the circuit when operated.
13.	Primary and secondary distribution circuits shall be protected by overcurrent protection devices having a rating or setting proper for the application.
14.	Where overcurrent protection is used for equipment or components internal to an equipment frame, it shall not be used as a substitute for primary- or secondary-distribution circuit protection.
15.	Ungrounded remote sense leads from each rectifier/charger shall be protected against overcurrent or short-circuit faults.
16.	Power conductors of ac or dc shall be permitted to occupy the same wiring enclosure or cable rack, provided all conductors have an insulation voltage rating equal to the maximum circuit voltage rating of any conductor within the enclosure or cable rack.
17.	The bend radii of field-installed conductors shall be sufficiently large to ensure that no damage is done to the insulation or the conductor.

 Copyright © 2006 IEEE. All rights reserved.

Table 9I-1—Highlights of ANSI T1.311 requirements for dc power distribution *(continued)*

Item	RequirementS for dc power distribution
18.	Conductors (individually insulated wire or rigid bus bars) shall be aluminum, copper-clad aluminum, or copper.
19.	When conductors are electrically joined to form the equivalent of a single conductor, the cables shall be approximately the same length; the same conductive material, the same cross-sectional area, the same insulation type; terminated in the same manner; and routed next to or as close to each other as possible.
20.	Approved single-conductor and factory-assembled, multi-conductor-control, signal, or power cables shall be permitted and may be installed in common cable rack systems.
21.	All power cables shall be supported and secured both vertically and horizontally.
22.	Where single or multiple conductors are installed in cable racks, several detailed rules shall apply.
23.	The ampacity of bus bars run singly or in parallel shall be as referenced in Table 5.
24.	Storage batteries shall be located in the area for dc power systems.

Table 9I-2—Highlights of ANSI T1.311 requirements for dc power system grounding

Item	Requirements for dc power system grounding
1.	Each frame shall be individually connected to a grounding conductor.
2.	All exposed dead metal parts shall be electrically connected to the frame.
3.	All power boards, bus duct, cable rack, equipment, conductive frames, and enclosures shall be grounded with a grounding conductor that is sized for correct ampacity. Minimum allowable size is 6 AWG.
4.	Conductive battery racks or enclosures shall be grounded with only a 6 AWG grounding conductor.
5.	Crimp-type connectors are preferred.
6.	A grounding conductor passing through any metallic conduit shall be bonded to it at each end.
7.	Approved methods shall be used for all bonding.
8.	Conductive cable racks shall be bonded to be electrically continuous.
9.	Cable racks of different grounding systems are not required to be bonded to each other.

Copyright © 2006 IEEE. All rights reserved.

Annex 9J

(informative)

Understanding telecommunications circuit protection

Wire-connected telecommunications equipment can pick-up potentially damaging voltages from lightning and ac power systems. These electrical sources can couple to the wires by four mechanisms: ohmic contact and three types of field—magnetic, electric, and electromagnetic.

There are international and national standards that specify overvoltage levels that the equipment must withstand (work afterwards) and higher voltage levels that must not cause a safety hazard. The expected overvoltage threat depends on the installation. Telecommunications centers, such as a central office, will have many lines converging. As the coupled stress is shared between all the lines, the resultant stress on each line is reduced. Access equipment, sited between the telecom center and the customer, will usually have fewer lines to feed and the stress level will be higher. Customers can be urban, suburban, and rural. The low population density of rural customers means small numbers of lines and the highest stress levels. The standards for each type of location should reflect the appropriate levels of stress.

There are other factors that influence the threat level. For example, at locations where the soil has a high resistivity, the lighting current causes a large (many kilovolts) GPR that can feed currents into the communications network.

The standard appropriate to a piece of telecommunications equipment depends on the installation site and the local conditions at that site.

9J.1 Protection classification

Protection applied at the building or shelter entrance will have the highest stress level. Being the first line of defense, this protection class is termed *primary,* and its job is to stop most of the stress from propagating into the interior wiring and equipment. For this reason, stress conditions that cause primary protector failure should result in a short-circuit fault mode. The short at the building entrance prevents the building equipment from any subsequent damage. Replacing the primary protector will restore normal system operation. The current levels used in the standards to establish the protector fault mode are 10 000 A or more.

As the primary protection does not stop all the stress from reaching the equipment, secondary protection is needed to mop up the remaining stress. The equipment design has what is termed *inherent protection.* Sometimes this is sufficient to meet the secondary protection needs. In most cases the inherent protection needs to be supplemented by including specific components in the equipment to increase the equipment withstand to the required level.

9J.1.1 Overvoltage protectors

These are nonlinear shunt elements that divert the current from the overvoltage away from the following circuits. There are two types: clamping (clipping) and switching. Up to the system maximum (rated) voltage, both types have a high resistance and so do not load the telecommunications line. In digital circuits, the protector capacitance must also be taken into account. Once the voltage exceeds a threshold level above the rated voltage, the nonlinearity shows up.

 Copyright © 2006 IEEE. All rights reserved.

Clamping protectors draw a rapidly increasing current for an increasing voltage. Thus voltage increases above the threshold are considerably attenuated. Figure 9J-1 shows the operation of the clamping protector. In limiting an overvoltage, the downstream load will be exposed to a high voltage for the time period that the overvoltage exceeds the system rated voltage level. Metal-oxide varistors (MOVs) and silicon transient voltage suppressor (TVS) diodes are examples of a clamping protector.

Switching protectors switch to a low-voltage condition once a certain voltage-current level is exceeded. Effectively this type of protector shorts out the overvoltage. When the overvoltage finishes, the protector switches off to restore normal operation. Figure 9J-2 shows the operation of the switching protector. In limiting an overvoltage, the downstream load will be exposed to a high voltage for the brief time period that the protector is in the clamping condition before switching into a low-voltage state. This form of voltage limiting places less stress on the downstream components and is particularly matched to the inherent withstand capability of high-voltage integrated circuits (ICs). Gas discharge tubes (GDTs) and thyristor SPDs (TSPDs), are examples of a switching protector.

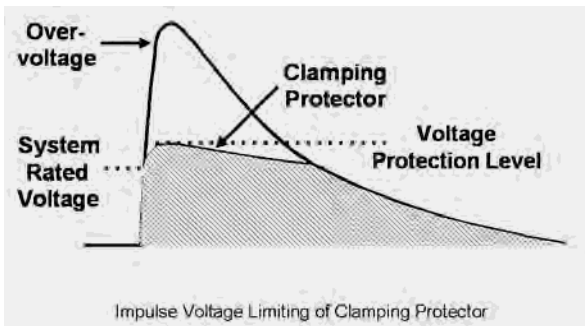

Impulse Voltage Limiting of Clamping Protector

Adapted with permission from Bourns, Inc.

Figure 9J-1—Operation of clamping protector

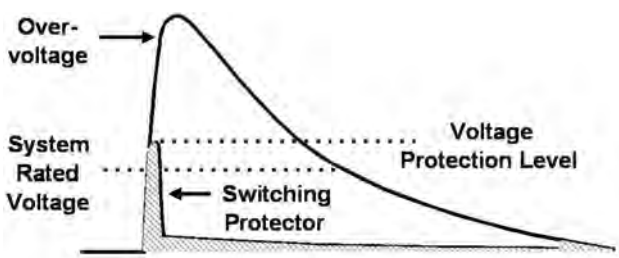

Impulse Voltage Limiting of Switching Protector

Adapted with permission from Bourns, Inc.

Figure 9J-2—Operation of a switching protector

9J.1.2 Overcurrent protectors

These are nonlinear circuit elements that prevent damaging currents from flowing to the protected equipment. Many of these elements use thermal or electromagnetic properties. The relatively slow response speed of these technologies means that the overcurrent protection is mainly targeted at ac protection. There are three protection possibilities: current interruption, current reduction, and current diversion. Fuses and

Copyright © 2006 IEEE. All rights reserved.

fusible resistors provide current interruption. Ceramic and polymer positive temperature coefficient (PTC) resistors give current reduction. Heat coils, used in primary protection modules, divert the current by shorting.

After operation, restoration of normal operation is by one of the following: replacement (fuses), manual reset (circuit breakers), or (no-maintenance) automatic reset (PTCs) resistors.

9J.2 Overcurrent and overvoltage protection circuits

Single stage protection circuits can place the overcurrent protection before or after the overvoltage protection. Primary overvoltage protectors are expected to be sacrificial in manner that is safe for the equipment and user. The purpose of the overcurrent protection is to protect the following installation. Thus the overcurrent protector is after the overvoltage protector. See part (a) of Figure 9J-3.

Secondary protection usually has the overcurrent protector before the overvoltage protector. See part (b) of Figure 9J-3. Here, the overcurrent protector is protecting both the overvoltage protector and the following equipment.

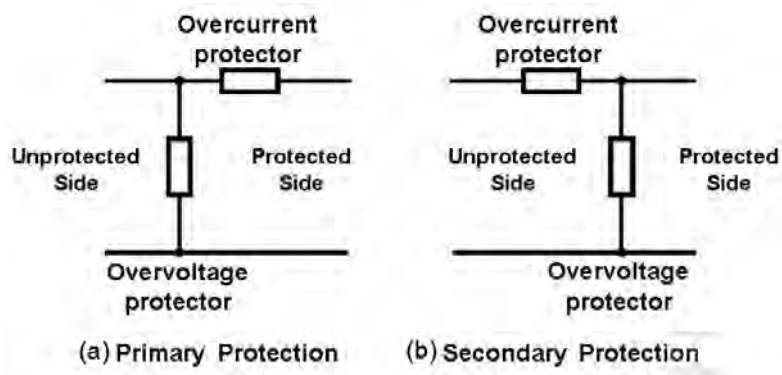

Adapted with permission from Bourns, Inc.

Figure 9J-3—Single-stage protection configurations

9J.3 Equipment testing

9J.3.1 Standards and recommendations

The typical difference between a standard and a recommendation is that a recommendation allows the implementor freedom to adjust the tests to reflect the local environment. An example would be, if the local ac power was 230 V 50 Hz, then testing for direct power line contact to the equipment line would use this value. If the local supply happened to be 120 V 60 Hz, then this value would be used for testing. Standards can also be termed *regulations.*

Besides equipment purchasers specifying compliance certain standards, on the open market there will often be a legal compliance requirement.

 Copyright © 2006 IEEE. All rights reserved.

The compliance testing will cover equipment resistibility or safety (UL 60950-2000), or both. Testing involves lightning and ac stresses at two levels; one where the equipment must work afterwards, and the other where failure is permitted.

9J.3.2 Standards overview

The equipment type and where it is located determines what standards apply. For a U.S. telecommunications network, Telcordia GR-974-CORE-2002 covers the primary protection and Telcordia GR-1089-CORE-2002 covers the equipment. Internationally, the ITU-T recommendations are K.28-1993 (semiconductor primary) and K.20-2003 (equipment).

At the U.S. subscriber's end of the line, Telcordia GR-974 covers primary protection. For the equipment there are two standards: TIA 968-A-2000 (lightning testing) and UL 60950-2000 (safety under lightning and high current ac stress). UL 60950 is harmonized with the international IT safety standard IEC 60950:2001 (the European equivalent standard is EN 60950:2000). The extra that UL 60950 has is the incorporation of UL 1459-1995, which brings in the high current ac stress testing. Internationally, the subscriber equipment would be covered by ITU-T recommendation K.21-2003 and the standard IEC 60950.

9J.3.3 AC testing

Stress testing is performed at a variety of amplitudes and durations. Figure 9J-4 shows the test spectrum limits for UL 60950-2000. The curved parts of the spectrum outline actually have test times longer than shown. The curved sections represent a time by which the equipment *must* have interrupted or reduced the current flow during the test. These special times represent the current-carrying ability of the wires feeding the equipment. It is no good having a piece of equipment that does not catch fire itself, if the current that it takes sets the feed wiring on fire. So this restriction is set by a system consideration not an equipment consideration. At the telecommunications central office, Telcordia GR-1089-CORE-2002 has a similar test spectrum, but its upper limit is 60 A (20 A higher than UL 60950).

9J.3.4 Lightning impulse testing

This testing uses triangular impulses formed by an exponential rise and decay (see the overvoltage shown in Figure 9J-1 or Figure 9J-2). The wave shape designation of an impulse is expressed as the rise time in microseconds separated by a "/" from the 50% decay time in microseconds. Thus a 10/1000 wave shape rises in 10 µs and decays in 1000 µs. To fully define the impulse waveform, the peak voltage or peak current value is given.

The main test wave shapes for Telcordia GR-1089-CORE-2002 are 2/10 and 10/1000. TIA 968-A-2002 uses 10/160, 9/720, and 10/560. ITU-T recommendations mainly use a 10/700 wave shape. These wave shapes have been used for many years. They were derived from field measurements, expectations, and particular philosophies of test. Network structures are now different; higher resolution recording equipment is available and research is ongoing to establish the conditions in networks today. One of the first outcomes is the establishment of a 10/350 test wave shape. This has been found to give good correlation with field performance of MOVs used for ac protection cellular phone base stations. The ITU-T series of recommendations were greatly extended and added to in the year 2000 to comprehend multimedia delivery and new powering schemes.

Copyright © 2006 IEEE. All rights reserved.

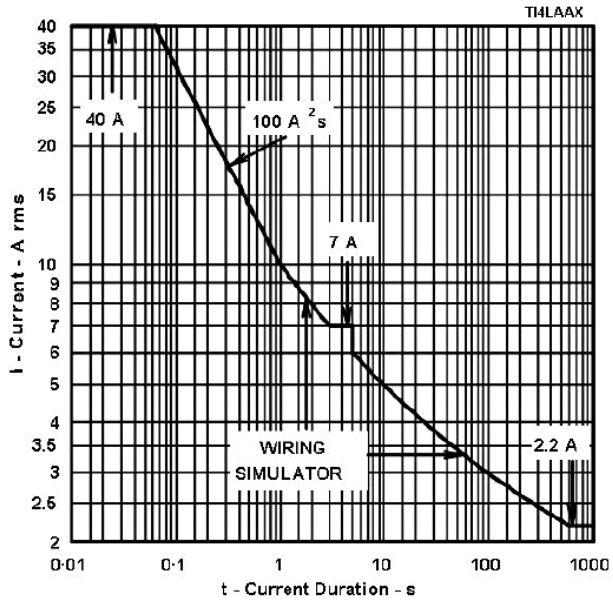

UL 60950 AC Test Spectrum

Reprinted with permission from Bourns, Inc.

Figure 9J-4—AC test spectrum limits for UL 60950-2000

9J.4 System coordination

9J.4.1 Grounding and bonding

When many pieces of equipment are connected together at a location, it is important to maintain a common ground potential. Without common bonding, the same telecommunications line could be at different potentials causing such things as protector operation and insulation breakdown.

It is important that the voltage drop across the protective ground does not substantially add to the protector limiting voltage rating.

In a TSP's telecommunications center, the grounding and bonding is very structured. However, at the subscriber locations, even the basic NEC may not be followed for utility and telecommunications grounding. An effective way of protecting several pieces of locally connected equipment, such as a computer, modem, and printer, is to feed all power and signal connections to this equipment via a surge reference equalizer (SRE) which unifies the protective grounding and provides overvoltage protection. An SRE is needed for each such occurrence of locally connected equipment.

9J.4.2 Protector coordination

The primary protector at the building entrance is expected to prevent most of the overvoltage stress from propagating into the building and the following secondary protection mops up what is left. This does not always happen. If the secondary protection operates before the primary, there may not be sufficient voltage to operate the primary. As the secondary protection would be diverting primary level currents, failure of the equipment or associated wiring and equipment may occur.

 Copyright © 2006 IEEE. All rights reserved.

A coordination mechanism is needed to prevent the secondary protection from taking excessive currents by ensuring that the primary protection is activated. The simplest method to ensure coordination is a series resistance between the primary and secondary protection. See Figure 9J-5. At a certain current level, the combination of the secondary protection voltage and the series resistor voltage drop is sufficient to activate the primary. Typically something like 400 V is sufficient to activate the primary. If the secondary protection current capability was 40 A, a series resistance of 10 ohms would ensure protector coordination. Such a resistance value could be provided by fusible resistors or PTC resistors. Equipment designs that use a simple series fuse will not develop sufficient voltage drop to activate the primary.

Coordination has always been a desirable thing, but now it is mandatory since the year 2003 issue of ITU-T K.20. Tests are incorporated in this recommendation that verify primary secondary protector coordination occurs. ITU-T K.21-2003 has similar tests.

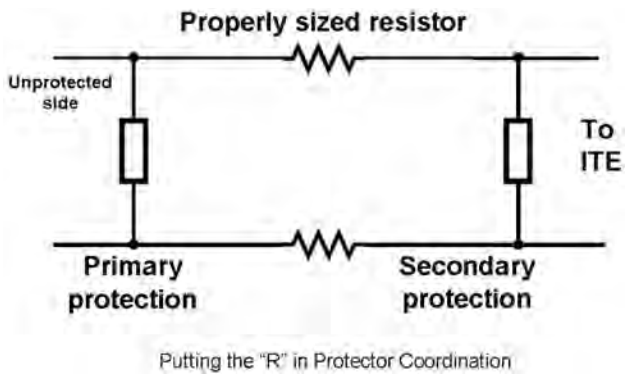

Adapted with permission from Bourns, Inc.

Figure 9J-5—Inserting series resistance to ensure protector coordination

9J.5 New services and architectures

The Internet explosion has driven the need for high data rate delivery to the subscriber. Both telecom and cable service providers are changing their networks to meet this need. The traditional location of functions has changed and new functions are added. The plain old telephone service (POTS), which used to originate at the telecommunications central office, can now be in access equipment or equipment on the side of or inside the subscriber building. POTS delivery can be done over broadband cable feeds by using triaxial cable.

9J.5.1 Digital subscriber line (DSL)

There are many types of digital data delivery. This subclause discusses Asymmetrical DSL (ADSL). ADSL uses bandwidth above the normal POTS spectrum. The bottom of the ADSL band is the subscribers channel back to the service provider, and the rest of the band is the channel to the subscriber. There is a splitter at the subscribers building to route the POTS and ADSL signals to and from the appropriate equipment. See Figure 9J-6. The relevant standards are TIA 968-A-2002 and UL 60950-2000. Viewed as a system, there are opportunities for simplified protection schemes.

Copyright © 2006 IEEE. All rights reserved.

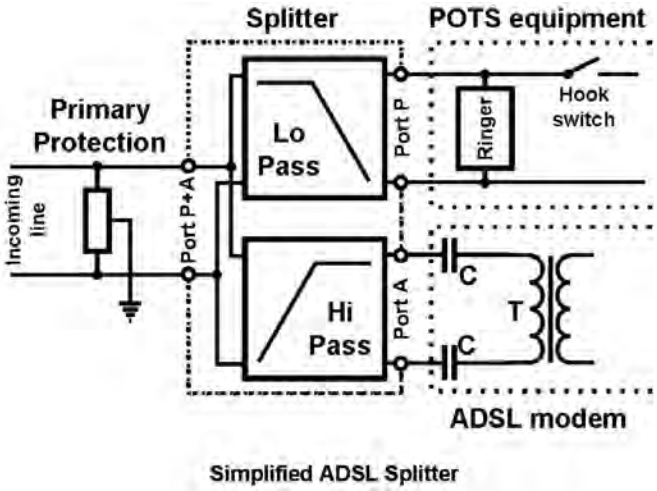

Reprinted with permission from Bourns, Inc.

Figure 9J-6—Simplified diagram of ADSL interface with primary protection

The incoming line, bearing POTS and ASDL signals, has primary protection at the building entrance. From there the line is connected to the splitter A+P port. Within the splitter, the signals are routed via filters to the P port serving POTS equipment and the A port serving the ASDL modem. The POTS equipment has a ringer or ring detector across the line followed by a hook switch. ADSL equipment line interfacing is usually by ac coupling, C, followed by transformer, T, isolation.

Most of the voltage stress on the balanced line is common mode (longitudinal). Differential (metallic) voltage stress between the line conductors is smaller and usually due to individual protector operation causing voltage unbalance. The ASDL modem will have the common-mode voltage stress between the windings of T.

UL 60950-2000 covers *powered* ITE on the customer's premises. As the splitter is a pass-through item, it is debatable if UL 60950 applies. The POTS equipment is powered by the external line dc and must be UL 60950 and TIA 968-A compliant. The ADSL modem comes under the same standards. Pragmatically, the splitter should be able to pass the voltages and currents that occur during the standards testing.

The ADSL modem offers protection simplification by use of the appropriate passive components. Provided the capacitors can withstand a 1.5 kV surge voltage and the transformer isolation is of a similar magnitude, no protection is needed. However, in actual practice the isolation voltage should be more like 5 kV, and some secondary winding protection would be needed for the drive electronics.

9J.6 Internal POTS and data lines

When the POTS line is created inside the subscribers building, what are the stress levels? UL 60950-2000 does not require ac stress testing for lines that are not external to the building. However, there can be some ac stress due to GPR caused by lightning providing an ionised grounding path for high-voltage transmission lines. A prudent engineer would probably ensure that the POTS equipment port could withstand low level short term ac stress. Inside the building there can be short duration field-coupled stresses from lightning currents. Current flow in the LPS grounding conductor and possibly in the building steel work can induce damaging voltages.

 Copyright © 2006 IEEE. All rights reserved.

IEC 61000-4-5:2001 covers data line protection for this sort of environment using the 1.2/50 combination wave-shape generator. The suggested test level depends on the installation class. Figure 9J-7 shows how the class zones work. Protector coordination between the class zones is needed to make the concept valid.

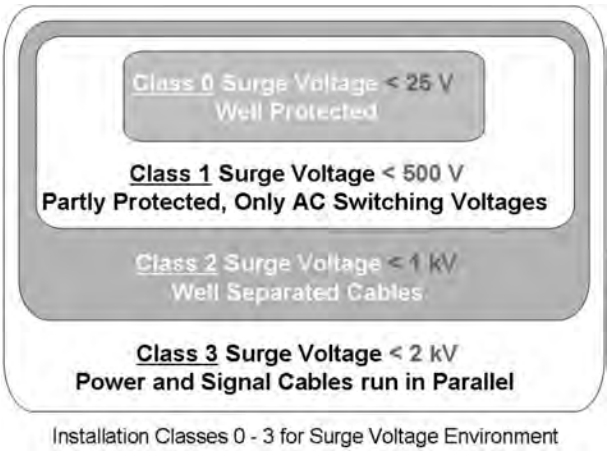

Adapted with permission from Bourns, Inc.

Figure 9J-7—Installation classes 0 to 3 for the surge voltage environment

Copyright © 2006 IEEE. All rights reserved.

Annex 9K

(normative)

Fundamental concepts on surge protection

9K.1 General

This annex provides highlights on the following standards:

a) IEEE Std C62.41.1-2002, IEEE Guide on the Surge Environment in Low-Voltage (1000 V and less) AC Power Circuits.

b) IEEE Std C62.41.2-2002, IEEE Recommended Practice on Characterization of Surges in Low-Voltage (1000 V or less) AC Power Circuits.

c) IEEE Std C62.43-2005, IEEE Guide for the Application of Surge Protectors Used in Low-Voltage (Equal to or Less than 1000 V, rms, or 1200 V, DC) Data, Communications, and Signaling Circuits.

Important concepts are addressed in these documents that are considered fundamental in developing recommended practices for SPDs for telecommunications electronic equipment and its environment in commercial and industrial locations. These IEEE documents should be consulted for context, clarity and ensured understanding on these fundamentals.

9K.2 Location categories

According to this concept, location category A applies to those parts of the installation at some distance (defined in IEEE Std C62.41.2-2002) from the service entrance. Location category C applies to the external part of the building and extending some distance into the building (defined in IEEE Std C62.41.2). Location category B extends between location categories C and A. The exact separation or transition from one category to the next is left undefined.

The propagation of voltage surges and current surges is a phenomenon that does not recognize arbitrary boundaries, but will be influenced by the characteristics of the physical components of the installation. A quantitative description is presented as part of the recommended practice, IEEE Std C62.41.2. It should be noted that the limitation of current surges by the wiring impedance applies only during the fast-changing parts of the surges. For surges with long duration (unidirectional with several hundreds of microseconds or low-frequency oscillations), this limitation will be substantially reduced or will not apply.

9K.3 Lightning threat scenario 1

Scenario 1 is the event of a lightning flash not directly involving the structure: the SPD stress (threat) is associated with surges that impinge upon the building via the service connection or are generated within the building. This scenario includes two standard waveforms (100 kHz ring wave and combination wave) applicable for three location categories and two additional waveforms (EFT and 10/1000 long wave). EFT burst test is not representation of the environment. There is no inference that the high-voltage levels proposed for the test (up to 4 kV) imply that such pulses actually occur on the ac power system. It is only a method for assessing the immunity of equipment to induced interferences.

 Copyright © 2006 IEEE. All rights reserved.

9K.4 Lightning threat scenario 2

Scenario 2 is the less common event of a direct flash to the structure (or a flash to earth very close to the structure. Lightning current impinging upon the installation can practically be considered as an ideal current source, unaffected by the configuration of the installation circuits. Depending upon the relative impedances and connections of the circuits in the installation, this direct coupling can result in current surges or in voltage surges.

The stress (threat) is associated with those portions of the lightning current that exit the building via the service connection. In the case of a power system with multigrounded neutral, the substantially lower resistance offered by the multiple grounding electrodes reduces considerably the portion of the lightning current carried by SPDs involved in the exit path. Therefore, when making a risk analysis, it is very important to consider the grounding practices of the power system. When the neutral is grounded at every building, no SPD is involved in the neutral conductor paths, providing some relief for the other SPDs associated with the line conductors.

The actual flow of lightning current will occur along intentional down-conductors as well as any conductor momentarily bonded by a side-flash and/or extraneous grounded conductive structural elements. Values of induced voltages during the flow of a lightning current in the down-conductor of a building that received a direct stroke can be sufficient to cause malfunction or damage. Anecdotal observations have shown that damage or upset is most frequently associated with flashes involving subsequent strokes. Lightning current to the earth-termination system divides into two components: flowing into the local earth of the building and flowing through the ac power system cables toward the distant earth.

These two currents divide according to the inverse ratio of the impedances. In the initial phase of the impulse current, the current division is determined by the ratio of the inductances. In the later phase of the dispersion, the current division is determined by the ratio of the grounding resistances. It is noteworthy that it is not the absolute values of the grounding resistances that determine the dispersion, but their relative values. With several buildings electrically connected, the effective resistance decreases. This means that the portion of the lightning current that flows out of the struck building into the low-voltage system will increase when more buildings are connected.

9K.5 Effect of SPD proliferation

A very significant change has taken place in the surge environment of low-voltage ac power circuits, namely the proliferation of SPDs in equipment as well as in installations. Furthermore, the proliferation of switch-mode power supplies in electronic appliances effectively connects substantial capacitors across the mains, producing a further reduction in the level of recorded voltages—but not in the occurrence of a current surge. This proliferation has produced a new situation where monitoring for surge voltages can lead to erroneous conclusions on the surge environment. In the present situation, the surge environment and its threat to equipment, including SPDs, is better characterized by measuring the capability of this environment to deliver a surge current.

9K.6 Immunity and withstand

Immunity of the electronic equipment will depend on the energy spectral density of the surge. At relatively low frequencies, there can be large transfer coupling losses between the surge and the disturbed circuits, but at higher frequencies these transfer losses become smaller. Thus, it may be important to suppress surges of small amplitude but with a large rate of change.

Copyright © 2006 IEEE. All rights reserved.

One approach might be to select a level (and only one) of withstand capability for a type of equipment. That level would cover a high percentage of the applications; the addition of some add-on interface device would provide for the small percentage of the cases of extreme worst-case environments. Another approach might be to design the equipment after selecting a level of withstand capability below which it will not be allowed to malfunction. A second, higher level would then be selected, below which the equipment may be allowed to malfunction or even fail, but up to which it will not be allowed to cause personnel hazard or consequential damage.

9K.7 Critical interaction between different systems

Although each of the power and telecommunications systems might include a scheme for protection against surges, the surge current flowing in the surged system causes a shift in the potential of its reference point, while the reference point of the other, nonsurged system remains unchanged. The difference of potential between the two reference points appears across the two ports of the equipment and can cause upset or damage. See also 8.6.7. This consideration of a system interaction is necessary because field experience demonstrates that equipment failures are often summarily, and incorrectly, attributed to a surge impinging on the power port of multiport equipment.

Understanding the nature of the phenomenon is important because the system-interaction stress can occur even if both ports of the equipment, power and telecommunications, are protected by SPDs—one at each port or upstream in the systems (raising expectations of adequate surge protection being provided). See 8.6.7 and Figure 8-27 on the SRE.

9K.8 Power quality to the location

Transient-related concerns are generally evaluated when transmission and distribution shunt capacitor banks are applied to the power system. Power quality symptoms related to utility capacitor switching include customer equipment damage or failure, nuisance tripping of adjustable-speed drive (ASD) or other process equipment, SPD failure, and computer network problems.

9K.9 Grounding practices

It is important to note the existence of two different practices in bonding the neutral and grounding conductors, resulting in different levels of surges involving the grounding conductor. In typical U.S. practice, the neutral conductor is bonded to the grounding conductor at the service entrance, and both are bonded to the local building ground. Local building grounds can be the structural steel, metal piping, ground electrodes, etc., in a sequence of priorities defined by NEC Section 250-81.

In typical European practice, the grounding conductor, generally called *protective earth,* is bonded to the neutral and to an earth electrode only at the distribution transformer. This protective-earth conductor is then brought into the building without further bonding to the local grounds. Thus, in the U.S. practice, there cannot be any N-G surges at the service entrance. External N-G surges cannot propagate into the building. Conversion of L-N surges within the building, however, can produce N-G surges at the end of branch circuits. Internal load switching can also produce N-G surges.

Downstream from the service entrance, isolation transformers can provide decoupling or cancellation of neutral-to-ground surges (if properly installed). However, they do not isolate or decouple line-to-line or line-to-neutral surges. These surges will be passed unattenuated through isolation transformers. Surge events can also appear on the output of these interface devices through inductive coupling between conductors or flexible cords commonly used for connecting the devices. Other mechanisms by which these surges can be

 Copyright © 2006 IEEE. All rights reserved.

injected are wiring errors involving the neutral and EGCs, or the improper attachment of premises-wiring neutral conductors to the output.

9K.10 Grounding interconnections and interactions

Ground connection practices for the SPDs provided in separate systems can result in unexpected voltage differences between the systems during surge events on one system. These voltage differences can occur even though each utility would be observing its mandated practices. Furthermore, these various systems and their functional elements might contain built-in surge protection that can result in side effects. See also 8.6.7. Equipment connected to wiring within the boundaries of category A could conceivably be placed in close proximity (the distance between printed circuit-board traces) with wiring from either category B or C. An example would be a computer that is connected to its ac power source deep within the premises (relative to the service entrance), but with its telecommunications modem connected to an aerial telecommunications circuit located a short distance away from the other side of the premises wall. The grounding provisions of the different wiring systems are of special note because they are expected to handle surges and are often designated paths for surge diverters. Grounding provisions of separate wiring systems might conduct surges of opposite polarity, and thus bring together extreme surge voltages within the confines of electronic equipment enclosures.

9K.11 Accepted practice for ac power service

The surge protection for ac power service may include an overall protection at the service entrance and/or individual protection for branch circuits. There is also the protection typically provided by surge arresters on the primary of the distribution transformer.

The user may provide supplemental transient-voltage surge suppression (SPD) as deemed necessary to protect equipment against disturbances originating from user-owned equipment within the premises or from elsewhere. This type of additional ac power line protection may be installed in any or all of the following locations:

a) Load side of entrance distribution panel

b) Branch system distribution panel supplied from a feeder

c) Individual branch receptacles (incorporated to the receptacle)

d) Plugged in the receptacle, as a removable device

9K.12 Accepted practice for telecommunications primary protector

TSPs install surge protection as required by the NEC at the premises of the customer to limit abnormal voltages between telecommunications conductors and ground. The telecommunications circuit protectors may be carbon blocks (older installations), gas tubes, or solid-state devices. They *only* offer the protection level required by the NEC. These devices may be mounted inside or outside the premises of the customer.

Many equipment manufacturers and vendors incorporate additional protection in their system designs to limit undesired voltages. The NEC has classified the equipment providing such additional surge protection as *secondary protectors*. The NEC requires secondary protectors to limit currents safely to less than the current-carrying capacity of the listed indoor telecommunications wire and cable, the listed telecommunications set line-cords, and the listed TTE having ports for external wire-line telecommunications circuits. Telecommunications primary protectors and secondary protectors must be "listed" in accordance with NEC requirements.

Copyright © 2006 IEEE. All rights reserved.

9K.13 Performance considerations

The protection desired can vary greatly depending upon the application. Evaluation of an SPD should verify a long life in the presence of both the surge and electrical system environments. At the same time, the remnant voltage of the SPD should provide a margin from the withstand levels of the equipment in order to achieve the desired level of protection. It is essential to consider all of these parameters concurrently.

 Copyright © 2006 IEEE. All rights reserved.

Annex 9L

(informative)

Additional information on surge protection

This annex is a compilation of various topics concerning surge protection and exposure.

9L.1 Purpose of surge protective devices

The purpose of SPDs is to neutralize voltage surges on cables caused by inductive, resistive, and capacitive coupling from nearby lightning strikes. The SPD must be capable of limiting any surge voltages to a level considered safe for the most vulnerable piece of equipment served by the system. It must also be able to divert safely the maximum surge current likely to be experienced by the system it is protecting, i.e., the IEEE C62.41.2 defined location category. Selecting SPDs for a particular application calls for a balance between minimizing the effects on normal operation, adequate surge handling capability, and secure voltage clamping.

9L.1.1 Desirable functionality for SPDs

SPDs should only conduct under surge conditions. Normally, an SPD will do absolutely nothing, much as a fuse does nothing when it is used within its rating. However, once the voltage in the system rises (due to the effects of a lightning strike, for example, the SPD should conduct and divert the energy away from the susceptible equipment.

SPDs should ideally operate instantaneously to divert a surge current to ground with no residual common-mode voltage presented at the equipment terminals. Once the surge current has subsided, the SPD should automatically restore normal operation and reset to a state ready to receive the next surge.

Several components are available (singly or in combination) that can be used to prevent excessive energy reaching susceptible parts of equipment or systems. These operate by diverting surges to ground or disconnecting signal lines. An acceptable device is fast in operation and capable of carrying large currents for short periods while limiting the voltage across or the current through protected equipment to levels below which damage can take place. Maintenance-free and self-resetting devices are normally preferred where interruptions to service should be avoided. Table 9L-1 lists desirable parameters for SPDs.

Specifications for an SPD should be matched to the telecommunications load it is intended to protect. For example, indiscriminately specifying the lowest clamping voltage can be counterproductive. In fact, the telecommunications load may be internally designed to withstand all but the most severe anomalies. In this case, the SPD may be asked to operate often and unnecessarily, thus shortening its life. Further, the SPD may place transients onto the grounding system often enough to cause data corruption of metallically interconnected equipment.

Besides powering, consideration should also be given to the grounding of the SPD in relation to other grounded ports of the telecommunications equipment. Where other grounded ports are involved, recommended practice (per 8.6.7) is to incorporate the SPD into an SRE assembly. The SRE ensures common bonding of the multiport grounding conductors.

Copyright © 2006 IEEE. All rights reserved.

Table 9L-1—Desirable parameters for SPDs

Parameter	Desirable performance for ac power system	Desirable performance for telecommunications
Limiting voltage (or let-through voltage)	<1 kV	Twice the peak operating voltage of the circuit with which the SPD is used.
Modes of operation	Phase-to-neutral; phase-to-earth; neutral-to earth (optional at panel with N-G bond)	—
Peak surge current	Category A >1 kA; category B >3 kA; category C >10 kA	Category C (low) 2.5 kA; category C (high) 10 kA
Leakage current	<0.5 mA (phase-to-earth)	—
Indication	Visual indication of status.	—
Volt-free contact	This should be provided for high-risk applications, where remote indication of reduced protection is required.	—
Intrusion protection rating (IP)	NEMA 1 or IP40 for internal applications; NEMA 4X or IP65 for outdoor applications.	—
Temperature/humidity	Suitable for environment	Minimum and maximum values should be quoted.
System impairment	The SPD should not interfere with the normal operation of the system into which it is connected.[a]	The SPD should not interfere with the normal operation of the system with which it is used.
Insertion loss	—	Expressed as an equivalent cable run length.
Bandwidth	—	Normally expressed at the 3 dB point in a 50 ohm system.
In-line resistance	—	[b]
Voltage standing wave ratio	—	An indication of the effect the SPD will have on the network.
Shunt capacitance	—	This affects the bandwidth.

[a]GDTs should not be connected directly across mains cables as they can short circuit the supply.
[b]If the value for in-line resistance is 0, then it is possible the SPD will not operate under some conditions, leaving the system unprotected.

9L.1.2 Series device approach

Given the typical SPD's need for an earth connection and a likely large (but brief) current flow, it seems a series protection device (which goes open circuit during a surge) is an obvious option. The series-isolation protection can be effected by unplugging connectors (thereby losing the signal) before or during a storm, or more elegantly, by using optical coupling. However, surge voltages across the isolation can be so huge that a series device is simply not practical due to flashover from the large potential differences occur during a GPR event.

 Copyright © 2006 IEEE. All rights reserved.

9L.1.3 Damage preventable by SPDs

Without proper SPD application, typical damage to a circuit board consists of items such as scorched and vaporized copper track, burned and open-circuit resistors, ICs with part of their package blown away, and semiconductor junctions failed short-circuit. At a lower level, but more insidious, is latent damage to semiconductors that fail perhaps months later, as can happen with ESDs. Damage may be categorized as the following:

a) *Destructive*—Obvious and instantaneous, often caused by lightning. See Figure 9L-1 and Figure 9L-2.

b) *Degradation*—Smaller cumulative power transients shorten the life span of the equipment.

c) *Disruptive*—Equipment begins to shut down or reset.

Catastrophic results also include failure of semiconductors in switched-mode supplies and internal circuits in linear power supplies. Injection of surges into the signal lines can affect the input/output devices. Minor effects include readings out-of-specification and reset or mode changes.

9L.1.3.1 Damage caused by SPDs

SPD overcurrent protection is the most important (and often overlooked) aspect of reliability and safety. Any SPD component can fail, open or shorted, due to surge voltage stress or temporary overvoltage (TOV) stress (such as a lost neutral). This TOV stress causes many more SPD failures than actual transient surges. The result may be smoke, fire, or explosion for some of the metal-oxide varistor (MOV) based SPDs. This occurs regularly in real-world SPD installations, but can be controlled with component level fusing or with thermal fusing. Done properly, this fusing will interrupt excessive continuous current through the component, interrupt available utility fault current, and yet pass transient current. Component level fusing in a SPD can provide a fail-safe system preventing catastrophic failure or complete loss of protection. Individual component level fusing of silicon avalanche diodes (SADs) is difficult because of the great number of SADs required for hardwired SPD. SADs are normally group fused whereas MOVs can be individually fused.

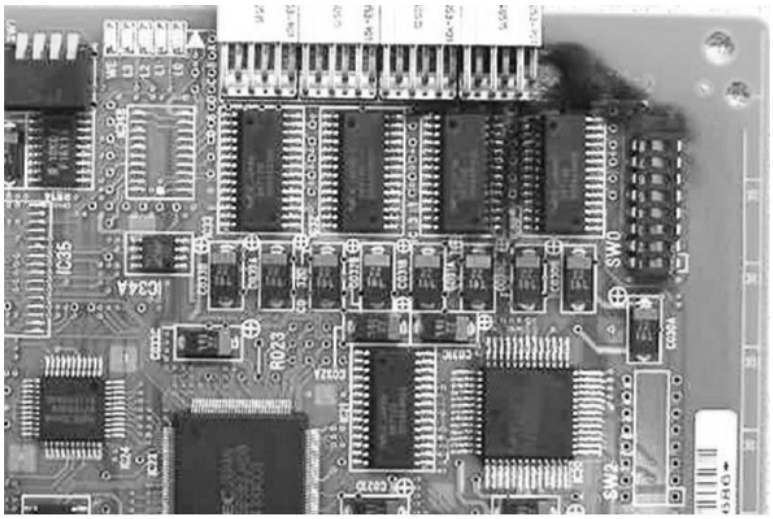

Figure 9L-1—Lightning damage to PCB via interconnect cable

Copyright © 2006 IEEE. All rights reserved.

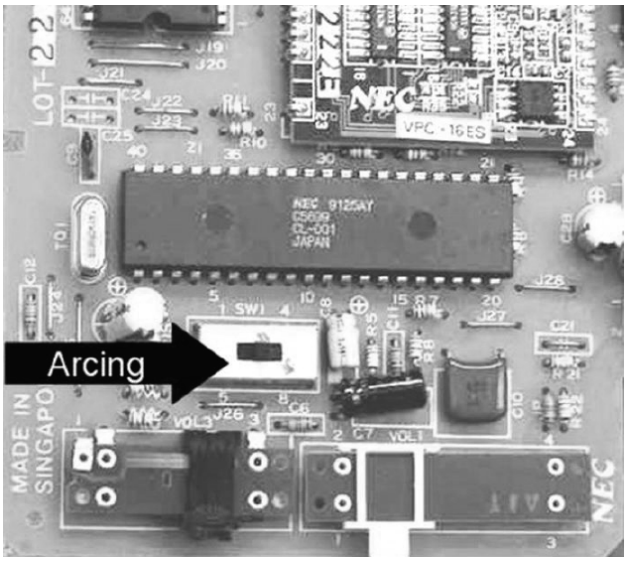

Figure 9L-2—Lightning damage to PCB via arcing at an option switch I

9L.1.4 Example in selecting an SPD

SPDs may look alike from the outside, but they are not the same and the performance characteristics of particular devices vary widely. See the example features for a plug-in SPD as listed in Table 9L-2.

Table 9L-2—Example features for a plug-in SPD

Feature	Description
UL 1449 listing	Signifies the suppressor has been tested by UL for surge suppression ability.
Maximum surge current	It is important to keep in mind that the effects of surges are cumulative. An SPD with a high maximum surge current will have a longer useful life than a device with a lower maximum surge current.
UL clamping category	Clamping is the amount of a surge that is not diverted and dissipated by the SPD. Therefore a lower number indicates more effective protection. UL groups surge protectors into categories that are based on a fairly wide range of actual clamping voltage. As a result, two significantly different devices may be found in the same category.
Actual clamping voltage	This is the actual voltage that will pass through the SPD to the equipment being protected. Once again, a lower number is better. Actual clamping voltage provides a more accurate assessment of a device than UL clamping category.
Appropriate connectors	Use one outlet for each piece of equipment and have room for ac adapters (transformers). If you are protecting a TV, VCR, telecommunications, fax, or computer, get a surge suppressor with a TV cable connector and/or phone jacks (an SRE).
Indicators	They should have status or warning lights to indicate when the device is working (and not just on), and electrical noise protection for EMI and RFI.

 Copyright © 2006 IEEE. All rights reserved.

9L.1.5 SPD general design considerations

General design considerations for NEC and UL 1449 described SPD units should include the following:

a) Field installable for existing sites

b) UL 1449 listed in all applicable protection modes

c) Tested per existing industry guidelines such as IEEE Std C62.1™-1989 and IEEE Std C62.45-2002.

d) Compatible with all linear and nonlinear computer and critical loads

e) Capable of protecting a UPS input and maintenance bypass/critical load with one system

f) High reliability

SPDs for ac power circuits should be product safety listed to UL 1449-1996. The use of SPDs not listed to UL 1449 is not recommended. Where used in existing installations, recommended practice is to ensure the SPD will be disconnected in the event of thermal runaway of SPD components. Thermal runaway may be instigated by an open neutral to the ac power system.

9L.1.6 SPD technology

Surge protection technologies may involve (singly or in combination) the items listed in Table 9L-3. For fundamental information on SPD technologies, see 4.10.2.

Table 9L-3—SPD technologies

Technology	Description
Silicon avalanche diode	The SAD has a very tight voltage clamp characteristic, a very fast response speed, but very low energy (surge current) capability.
Metal-oxide varistor	MOVs provide an excellent compromise of voltage clamping, response time, and energy handling capability.
Hybrid	Many hardwired SPD designs use several components connected together in parallel to achieve higher energy handling capability and lower surge impedance.
Air or carbon spark gaps	Air spark gaps are generally connected between line and ground in locations where a high-voltage transient can “flash over” to ground.
Gas discharge tubes	GDTs seek to overcome some of the disadvantages of air or carbon spark gaps by hermetic sealing, thereby eliminating environmental effects.
Multistage hybrid circuits	It is generally necessary to use more than one type of component in a protective network to obtain the best possible combination of desirable characteristics. The most common combination forming a “multistage hybrid circuit” incorporates a high-current relatively slow-acting component with a faster acting but lower power rated component in such a way as to minimize voltage and current output.
Standard Zener	Surge diodes with breakdown voltages of the order of 180 V can provide clamping of transient surges, but the power dissipation in the component is high and leads either to an unacceptably high cost or to a reduced life expectancy for the network.
Surge relays	Surge relays are designed to disconnect the signal lines in the event of high current surges, thus protecting the associated equipment.

Copyright © 2006 IEEE. All rights reserved.

9L.1.6.1 System withstand ratings

Generally, most low-voltage power systems and the electronic and electrical equipment with which they are associated, can withstand voltage surges of two to three times their normal peak operating voltage, i.e., around 1 kV for 120/240 V (rms) systems, (8/20 µs, 3 kA wave shape). Generally, most telecommunication cabling systems and associated electronic equipment can safely withstand voltage surges of twice their normal peak operating voltage, e.g., around 96 V for 48 V systems.

9L.1.6.2 Device surge rating

The standard method of surge current comparison used today is by evaluating the surge capability or the product's maximum surge withstand capability on manufacturers published surge current data. Typical manufacturer's data can range anywhere from 6.5 ka to 40 ka per MOV to 10 kA per SAD.

9L.1.6.3 SPD topology and mounting considerations

At some point in the process of acquiring surge protection the decision must be made on whether a series or parallel device is the better choice for the application. For example, if surge protection is required for a building or factory, parallel-connected devices may be sufficient to proactively stop high-energy transients from mitigating downstream. On the contrary, if a susceptible or critical piece of equipment needs to be protected from transients or isolated from induced high frequency, than a series connected filter may be the better choice.

Main and subpanel SPDs usually come in two general types: series and parallel. Series SPDs are load-bearing devices and have to conform to the current the power company delivers to the main and subpanel. Parallel SPDs are nonload bearing devices and therefore can be used regardless of current delivered to the main or subpanel.

Series SPDs are usually very expensive and require breaking the incoming line to install. Parallel SPDs are usually installed on the load side of the main breaker and are quite efficient. UL 1449-1996 rates surge suppressors in pass-through voltage categories. Some manufactures of parallel type surge suppressors utilize plug-in modules, which allow for the replacement of damaged modules. If the ratings are obtained at the module itself without consideration for the length of wire required for the installation, the rating can be smaller than actual. As a generic rule of thumb, for each 1000 A of surge current 16 V of extra "remnant voltage" is added per foot of wire. Using this rule of thumb, if a category B impulse (6 000 V 1.2 × 50 µs, 3 000 A, 8 × 20 µs) is applied to a panel that has an SPD located 3 m (9 ft) away, the SPD's rating is increased by over 400 V.

9L.1.6.4 Series or in-line devices

Series devices can include noise filtering as well as surge protection. The main disadvantage of these devices is that, with the exception of low-current devices, they can become very large as the full load current must be passed through the series elements. Devices are available with a rating of thousands of amps but these SPDs are very large indeed and require whole cabinets for themselves. To reduce the risk of picking up voltage surges in cable runs, in-line connecting SPDs should be connected as close to the protected equipment as possible.

Generally, all SPDs designed for protecting data and telecommunications systems connect in-line.

9L.1.6.5 Parallel or shunt devices

These devices are wired in parallel to the ac power system and are available in a variety of surge ratings. Their main advantage over the series devices is that they only need to be rated for the surge current expected at the installation and not for the load current. Many different types are available, ranging from fully

 Copyright © 2006 IEEE. All rights reserved.

enclosed wall mount devices to individual SPDs for each phase. The SPD should be mounted and connected as close as possible to the electrical system it is to protect.

9L.2 Testing

In order to be able to test protection networks and provide comparison data, various standard waveforms have been proposed over the years. These are all defined in terms of magnitude and wave shape, and can refer to current (normally associated with short-circuit conditions) or voltage (associated with open-circuit faults). Waveforms are usually double exponential rise and decay shapes, specified by two time periods: rise time to peak value and decay time to 50% peak value. See IEEE Std C62.41.2-2002. The resistance of the SPD to the test is less important than the "limiting-voltage" (i.e., the residual voltage out of the unit during the period of the transient pulse; this is also known as *let-through voltage*). This should be below the level at which equipment will be damaged. The SPD specification should define the limiting-voltage for a particular test condition or give some other similar indicator of true performance.

The combination waveform is the main test wave used by surge protection manufacturers and contains a large amount of energy. It is a representative waveform referred to in many standards and allows the comparison of various protection methods. However, lightning strikes vary significantly in their intensity from strike to strike, and so test waveforms will give a "rule of thumb" when comparing one SPD against another.

These waveforms are defined by their rise time, 1.2 µs and 8 µs respectively, and the time taken to decay to half of the peak value, 50 µs and 20 µs respectively, measured from the start of the wave. The 1.2/50 waveform is an open circuit voltage test while the 8/20 waveform is a short circuit test. SPDs will always act as a short circuit to surges, and therefore the 8/20 waveform test is the most relevant for SPD testing. The difference in shape between the two waveforms can be explained by current flow through the power system cabling. Cable inductance slows the rise time of the 8/20 waveform, but the huge current flow decreases the length of the waveform. The 1.2/50 waveform relies more on the natural rise and fall of the lightning impulse. Since no current flows, the rise time is not restricted by the cable inductance.

These tests are only relevant in categories B and C since the long and inductive path into category A changes the waveform's shape and maximum current.

The standard waveform 0.5 µs 100 kHz ring wave differs from the majority of surge waveforms by having a high frequency ac component. Where a surge enters a building, it is very similar to the 8/20 waveform. However, by the time it has traveled along a length of power system cables and around the building, the waveform changes significantly—the current has reduced and turned into a decaying 100 kHz wave.

9L.2.1 Clamping voltage

All SPDs are triggered when the applied voltage rises above a given level. This is known as the *clamping voltage* and should be chosen to be higher than the ac power system voltage plus a margin. Figure 9L-3 shows a surge imposed onto the ac power system. The limiting voltage of the SPD is represented by the dashed line and is above the peak value of the ac power cycle to prevent the SPD conducting current when no surges are present. The shaded area shows the SPD clamping the overvoltage and preventing damage to susceptible electronic equipment. The current capacity of the SPD needs to be chosen to meet the amount of current expected in the given environment.

Copyright © 2006 IEEE. All rights reserved.

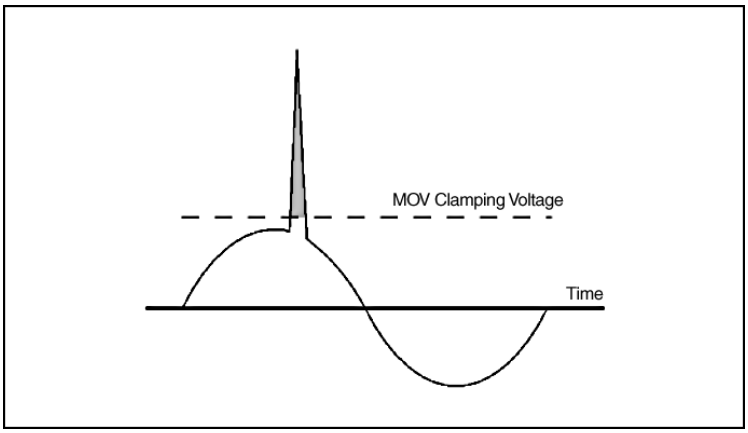

Figure 9L-3—MOV clamping of a voltage transient

The technology used to perform the clamping meets the following criteria:

a) The surge handling is high enough for the application.

b) The clamp voltage is high enough to avoid the SPD clipping the supply continuously.

c) The SPD should switch off once the surge has passed.

To have a sufficiently high surge rating, the devices are usually MOVs or spark gaps. MOVs have a high surge rating and are available in many different voltage ratings. Spark gaps have very high surge ratings but suffer from power follow-through. Once a spark gap operates it effectively shorts the supply and requires special design to switch off again. Standard GDTs should never be connected directly across the mains as they will normally never turn off.

NOTE—Some devices may be characterized by joule rating and/or response time. These measurements are not recognized by UL, IEEE, ANSI, NEMA, or IEC as being relevant to ac SPDs.

9L.3 Exposure considerations

Exposure considerations include sources, levels, and categories. For normative information, see Annex 9K.

9L.3.1 Exposure sources

Primary exposure sources include lightning, utility switching, power factor correction capacitor switching, faults, and construction related activity The enormous energy transfer constituting a lightning strike leads to transient generation in nearby electrical systems in a variety of ways, e.g., RFI, induced voltages via magnetic or capacitive coupling, and surge currents caused by localized shifts in ground potential.

Inductive effects require the lightning currents to be in close proximity to signal cables in order to achieve a measurable level of coupling. Generally, field signal cables are screened or shielded to reduce general RFI and noise pickup. Twisted pair cables are normally used, reducing voltages between lines to levels that do not cause measurement errors, etc. However, common-mode voltages can still be generated at levels that can cause component damage in susceptible systems.

Any time a substation is switched into or out of the network, a voltage transient is produced. The transient can reach hundreds or thousands of volts depending on the current, impedance, and distance from the switching point(s).

 Copyright © 2006 IEEE. All rights reserved.

Power factor correction capacitors are added to the network by utilities as well as large commercial power users. The purpose is to compensate for excessive inductive loads such as motors and to boost lower power factor at distribution extremities. These banks of capacitors are typically switched in at the same time every morning and switched out at the same time every night. Those with transient voltage measuring equipment can see voltage disturbances at the same time every day. The transient can reach hundreds or thousands of volts depending on the impedance or distance from the utility's or commercial user's capacitor banks.

A fault is a catastrophic phase-to-phase or phase-to-neutral/ground connection, ideally causing a fuse or circuit breaker to operate instantly. When a fault occurs, the distribution voltage falls from normal to very near zero, and the system's corresponding fault current increases until the protective circuitry operates and the fault is cleared. Though the loads downstream of the fault-clearing device experience an interruption, the loads upstream of the fault-clearing device are subjected in certain conditions to substantial voltage transients.

Arc welders in use in construction close to a building can produce damaging voltage transients and electrical line noise.

9L.3.2 Exposure levels

The exposure level can be generally identified for an installation according to Table 9L-4. Most installations will fall into medium or low exposure levels unless they are particularly remote or in an area known for high levels of lightning activity. Both the exposure level and the category are required before deciding the level of protection appropriate for a given installation.

Table 9L-4—Exposure levels

Exposure level	Description
Low	Systems in geographical areas known for low lightning flash density with little load or capacitor-switching activity.
Medium	Systems in geographical areas known for medium to high lightning flash density, or with significant switching transients. Both or only one of these causes may be present, as it is difficult to separate them in reviewing the results of monitoring disturbances.
High	Installations that have greater surge exposures than those defined by low exposure and medium exposure. The more severe conditions result from extensive exposure to lightning or unusually severe switching surges.

9L.3.3 Exposure categories

Once the exposure level is decided, the maximum surge levels expected for a particular installation should be determined. However, the surge levels within an installation may vary considerably from one location area to another. See Table 9L-5. Category C is the highest expected surge level location since it is exposed to the possibility of direct strikes or close enough to a direct strike to receive a large proportion of the strike. See IEEE Std C62.41.2-2002 for a full explanation and recommendations on exposure categories.

Data and telecommunications cables linking buildings are generally considered to be in category C as the slower surge voltages seen on these systems are not attenuated in the same way as those on ac power cabling.

Copyright © 2006 IEEE. All rights reserved.

Per IEEE Std C62.41.2, the largest surge that is likely to appear on the bus bars of the main power distribution board for a building is 6 kV and 3 kA, defined as category B. The maximum surge current caused by lightning is limited by the impedance of the cabling system.

Table 9L-5—Description of categories

Category	Description
A	Outlets and long branch circuits. All outlets more than 10 m (33 ft) from category B. All outlets more than 20 m (66 ft) from category C.
B	Feeders and short branch circuits. Distribution panel devices. Bus and feeder industrial plants. Heavy appliance outlets with short connections to service entrance. Lighting systems in large buildings.
C	Outside and service entrance. Service drop from pole to building. Run between meter and panel. Overhead line to detached building. Underground line to well pump.

 Copyright © 2006 IEEE. All rights reserved.

Chapter 10
Industrial systems

10.1 Introduction

This chapter describes the grounding and wiring methods to minimize the impact of noise on industrial control systems. While the physics of industrial equipment is identical to other systems, the types of equipment and practices are different. Industrial control equipment is usually contained in a cabinet where sensitive and noise-generating components are in close proximity. The components can include very sensitive devices that use thermocouple or low-level analog signals and interfering devices such as servos and adjustable-speed drives (ASDs) that generate high *di/dt* currents. Furthermore, the wiring usually extends beyond the cabinets to sensors and actuators that are part of the process to be controlled. The situations are sufficiently unique to merit a separate chapter.

It is the intent of the chapter to provide a basic understanding of the principles and recommended practices for the most significant noise prevention techniques. It is not intended to offer a cookbook of every possible noise control situation. There are many good publications that relate the theory of noise control. There are also several books that discuss noise control techniques for electronic systems but few, if any, that describe industrial practices.

The primary audience for this chapter is the panel builder. The panel builder uses components like programmable logic controllers, servos, sensors, and drives to control a steel rolling mill, a cookie oven, or an amusement park ride. They combine different equipment from many manufacturers, often in a one-of-a-kind system. Consequently, the possibility of interference problems is high if proper techniques are not followed. This chapter does not consider noise control internal to the manufacturer components.

It is far less expensive to apply noise control measures during system design than it is to fix a malfunctioning system. If basic measures are implemented rigorously, a reliable system should result. However, if just one wire is routed incorrectly or a filter is missed, it may be enough to cause problems. Experience shows that it is very difficult to ensure that these measures are applied 100% of the time. If proper measures are taken, the system will be robust and more tolerant of minor mistakes in implementation.

The chapter begins with a review of the basic concepts necessary to understand noise control. Recommended techniques are then presented for industrial noise control practices.

10.2 Basic noise control theory

This subclause presents the basic engineering concepts of noise control. It is assumed the reader has an acquaintance with some of the ideas but may not be able to apply them. More comprehensive description is contained in many good books on the subject listed in 10.6. Chapter 4 provides some background. Subclause 4.4.2 discusses near-/far-field concepts as well as capacitive, magnetic, and electromagnetic coupling mechanisms; 4.6 compares when lumped circuit vs. field methods should be applied; and 4.9 reviews shielding.

One of the most basic issues in the analysis of noise control is application of the appropriate engineering model to the problem. The engineering model most engineers are familiar with for electrical analysis is the lumped circuit model. This is where the system is reduced to a network of resistor, inductors, capacitors, and voltage and current sources. This model is used at low frequencies. At higher frequencies, magnetic and electric field coupling factors become significant. Lumped circuit analysis is still appropriate, providing stray capacitance and inductance is factored in. At still higher frequencies, where the speed of light is a significant factor in path propagation times, distributed circuit analysis or a field model offers a better insight in some cases. In the field model, behavior is predicted based on the electric and magnetic fields

Copyright © 2006 IEEE. All rights reserved.

between conductors and their interaction with the surroundings. Geometry is the most important factor and not equivalent impedances.

The field model should be used where the dimension of the circuit under consideration is greater than about 1/20th of the wavelength of the signal or noise. In this case, the conductors are not at the same potential along the entire length. In other cases, a field model just offers a simpler explanation of the behavior. Since 1/20th of the wavelength for 60 Hz power is 250 km, a lumped circuit model is practical for most 60 Hz situations. (However, transients in the audio-frequency range on a utility power system extending over many kilometers may require a field model). Consider a typical 2 m (6.6 ft) tall industrial control cabinet where the conductor lengths within the cabinet are less than 2 m (6.6 ft). The one twentieth rule applied to 2 m (6.6 ft) corresponds to a frequency of 7.5 MHz. The field model should be applied to noise well above that frequency and lumped circuit model applied to noise below that frequency. Morrison [B4][1] provides a detailed description of noise behavior from the field perspective.

The other situation where the field model is particularly useful is in visualizing the noise coupling mechanism for a particular configuration. For example, two conductors running parallel have much greater potential for interaction than two conductors that are perpendicular. In the field model, there is intuitively greater coupling of magnetic and electric fields of the parallel conductors. In the lumped circuit model, the coupling is represented by equivalent capacitance and mutual inductance between conductors but does not infer which configuration has more coupling potential unless the values are known. Often, the field model will be used to explain the difference in coupling impedances of the lumped circuit model.

10.2.1 Common-mode and normal-mode mechanisms

One of the basic requirements for analyzing interference problems is identifying the noise circuit. Noise currents and voltages conform to Kirchhoff's circuit laws. Noise current does not simply drain into "ground" and disappear. Noise has a source and follows a closed loop back to the source. Identifying the noise circuit is often the most challenging aspect of analysis but once complete can help lead to the solution.

The two most common noise modes are normal mode and common mode. Figure 10-1 shows an example of both. Normal mode (also called *differential*) is noise measured between the two input terminals to a device. The noise exists with the desired signal at the input.

Common mode (also called *longitudinal*) is noise measured between any device input terminal and ground. The noise is identical in magnitude and phase at each of the input terminals and, therefore, will not be measured between input terminals.

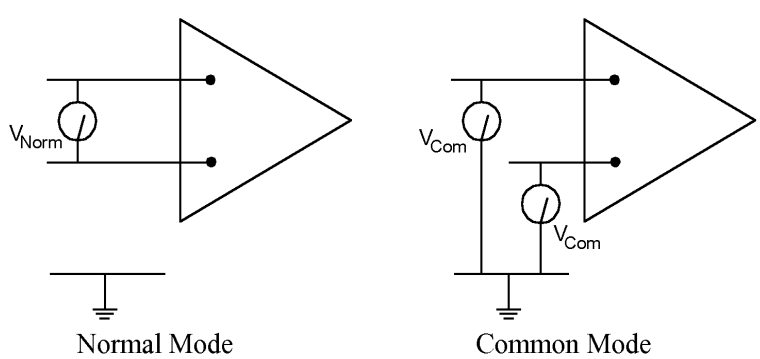

Figure 10-1—Diagram of measurement of normal-mode and common-mode noise

[1]The numbers in brackets correspond to those of the bibliography in 10.6.

 Copyright © 2006 IEEE. All rights reserved.

The circuit topology of the devices under consideration strongly relate to the ability of the system to tolerate common-mode noise. Figure 10-2 shows the configuration for balanced and unbalanced circuits. In an unbalanced circuit, one of the signal conductors is grounded. Common-mode noise, in this case, would exist between the grounded conductor and the ungrounded conductor. The result is that an unbalanced circuit converts common-mode noise to normal mode. Examples of unbalanced configuration are RS-232, thermocouple wiring, or most low-level analog signal inputs.

The ground point on a balanced circuit is midpoint between two impedances across the input (or output) terminals. Common-mode noise voltage between the input terminals and ground results in the same voltage input at both terminals. This method works as long as the impedance between conductor and ground is equal for each conductor. Consequently, common-mode noise voltage will not appear at the input terminals. Balanced configuration is found typically on communication circuits run over long distances. Examples include Ethernet, RS-485, and most of the proprietary programmable logic controller (PLC) manufacturer's communication systems.

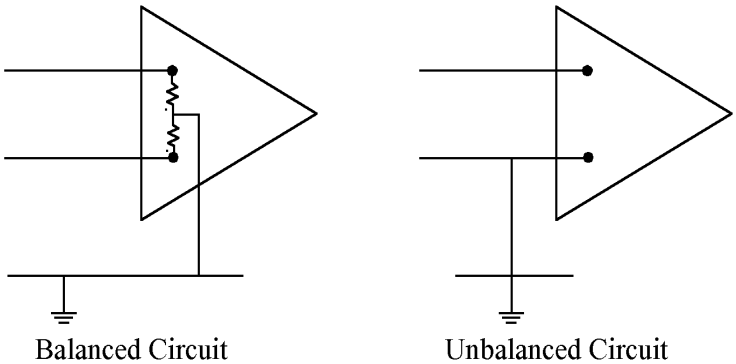

Figure 10-2—Diagram of balanced and unbalanced circuit topologies

10.2.2 Fields in noise control

Visualizing the electric and magnetic fields provides a means to predict potential interference behavior.

Capacitance is the ability of a given geometry to store electric field energy within the volume between the conductors. An electric field exists anytime there is an accumulation of charge or, stated another way, any time there is a potential difference between conductors.

The capacitance between the conductors depends entirely on the physical characteristics of the system. Changing the distance between conductors or substituting a different material will change the capacitance and the stored energy.

For the purposes of wiring a control cabinet, there are several possibilities for reducing electric field interference. First, increase the distance between the conductors to reduce the field strength at the receptor conductor. Second, instead of running the conductors parallel, run them perpendicularly (admittedly, not always practical). The perpendicular conductors will have much less common length than the parallel configuration and will reduce coupling. Avoid placing noise producing and noise susceptible conductors in common wireways.

A flowing electric current creates a magnetic field. An external time varying magnetic field through a looped conductor will create a voltage potential along the loop.

The coupling between the current producing the magnetic field and the developed potential on the other conductor is determined by the mutual inductance between the two conductors. The mutual inductance

Copyright © 2006 IEEE. All rights reserved.

depends entirely on the physical characteristics of the system. Since the magnetic field follows a closed path, one conductor loop is considered the source and the other loop is the receptor for noise coupling.

There are two methods for reducing magnetic coupling: the distance between the loops may be increased or the area of the loops may be reduced. Some loops are unavoidable. In that case, conductors should be routed as close to ground to minimize common-mode noise (ground is one of the conducting paths) to minimize loop area.

10.2.3 Field coupling mechanisms

A conductor must be within a changing field for noise voltage to be generated. (There are other sources of noise such as thermal, dissimilar metal potentials, etc., but those are not considered here.) If all the currents are constant dc and there is no physical motion, there will be no induced noise. All mechanisms depend on the rate of change of the fields.

One of the fundamental questions to be answered in noise analysis is the wavelength of the highest frequency of the potential noise of concern. The approach is that the highest frequency represents the worst case. Techniques to mitigate the highest frequency will improve the low-frequency immunity as well.

In most industrial systems, the most common noise sources are pulses. For a pulse, the upper frequency limit of the noise spectra may be approximated from the pulse rise (or fall) time, as shown in Equation (10.1):

$$f = \frac{1}{t_r \pi} \tag{10.1}$$

Where t_r is the rise time and f is the frequency. This assumes a 50% duty cycle pulse width with equal rise and fall times. The frequency range involved in many system malfunctions is generally between 200 kHz and 10 MHz.

With the maximum frequency known, the wavelength can be determined from Equation (10.2):

$$\lambda = \frac{v}{f} \tag{10.2}$$

Where v is the velocity of propagation, and λ is the wavelength. The velocity of propagation depends on the material between the two conductors. In air or a vacuum, the speed is the speed of light (300 × 10^6 m/s). If the region between conductors is entirely insulation, the speed may only be 50% to 70% the speed of light. However, in most situations, although there is insulation around the conductor, the region is predominately air.

The wavelength and the physical size of the system under consideration will determine the most likely coupling mechanism. If the separation distance between the source and receptor conductors is less than $\lambda/2\pi$ (about one-sixth wavelength) of the highest noise frequency, the coupling will be magnetic or capacitive (near field). If the distances are in excess of one-sixth wavelength, the mechanism will be electromagnetic radiation (far field). Within a control cabinet, magnetic and capacitive coupling are the most common mechanisms.

For near-field coupling, it must be determined if the magnetic or electric field dominates. If the source is current driven, the near field will be dominated by the magnetic field (although there will still be a relatively weaker electric field too). If the source is voltage driven, the near field will be dominated by the electric field (there will still be a relatively weaker magnetic field). Those experienced in noise control can infer the dominant mechanism from the characteristics of the system. For those less experienced, a procedure can be applied to help identify the dominant mechanism.

 Copyright © 2006 IEEE. All rights reserved.

The procedure is based on the ratio of the electric and magnetic fields strengths between the two conductors. This ratio is the wave impedance. For a far-field traveling wave (radiation) the two fields balance at 377 Ω in air. If the field is generated by a current loop, the near field will be largely magnetic and the wave impedance will be less than 377 Ω. If the field is generated by a voltage source such as a whip antenna, it will be largely electric and the wave impedance will greater than 377 Ω. A simplified method of finding the wave impedance is from the rate of change of the voltage divided by the rate of change of the current in the source conductor (note that voltage divided by current is impedance), as shown in Equation (10.3):

$$\frac{\Delta V}{\Delta I} \tag{10.3}$$

Where ΔV is voltage change, and ΔI is the corresponding current change at the frequency of concern.

These methods may be applied to find the near-field coupling mechanism of an automobile ignition spark plug circuit. Assume the ignition generates a 20 000 V pulse at 0.1 A [see Equation (10.4]:

$$\frac{\Delta \mathrm{V}}{\Delta \mathrm{I}} = \frac{20\ 000\mathrm{V}}{0.1\mathrm{A}} = 200\mathrm{k}\Omega \tag{10.4}$$

The wave impedance is 200 kΩ and is well above the impedance for a traveling wave of 377 Ω. For the near field (around the car), the noise coupling would by the electric field. Most automobiles use resistor spark plug wires that dampen the high-voltage circuit and reduce the pulse rise times (lowering the upper noise limit frequency).

10.2.4 Shielding

Shielding is a technique to reduce the noise inducing fields near a conductor or to contain a field associated with a noise source. Table 10-1 shows the predominate shielding mechanism for the different types of fields at low and high frequencies. For this table, the low-/high-frequency transition is in the megahertz range. For near-field phenomena, electric field interference is best analyzed with a lumped circuit model to minimize the effect of capacitive coupling between conductors and shields. However, the coupling capacitance values are best estimated on a relative basis from field considerations. Magnetic field interference can be minimized by reducing the circuit loop area. Diverting a magnetic field provides a low-permeability alternate magnetic path for the field. For an electromagnetic far-field condition, the two physical mechanisms for shielding are reflection and adsorption. Reflection redirects the field away from the shield. Absorption creates eddy currents in the shield and dissipates the energy as heat. Absorption relates to the skin effect depth in the material. If the skin depth is greater than the shield thickness, very little of the field will be adsorbed. The skin effect depth is frequency and material dependent.

Shielding at high frequencies can be very effective. However, shielding is difficult for magnetic fields at low frequencies. In that situation, diversion can be applied.

An example of low-frequency electric field shielding is shown in Figure 10-3. In this case, a two-conductor shielded cable is routed from a remote sensor to an amplifier. The possible shield grounding locations are shown by dashed lines. There is no one solution for shielding. Each situation requires application of basic principles. The method described here is identical to the methods described in Ott [B6].

Copyright © 2006 IEEE. All rights reserved.

Table 10-1—Dominant shielding mechanisms

Frequency	Electric	Magnetic	Electromagnetic
Low	Capacitive coupling	Loop area /diversion	Reflection
High	Absorption	Absorption	Absorption

Since this is a low-frequency near-field situation, the conductors and shield are assumed to be at the same potential along their entire length. There will be stray capacitance among all the metallic elements and external grounded structures. There is capacitive coupling between the conductors, the conductors and the shield, and the shield and ground. The equivalent cable capacitive coupling can be assumed to exist at mid-span of the cable. The amplifier is grounded at its common input. Noise voltages exist among the other ground locations relative to the amplifier ground.

To analyze the configuration, determine the equivalent circuit at the amplifier input terminals 1 and 2 through the capacitive voltage dividers and the voltage noise sources. The equivalent circuit is shown in Figure 10-4. Ground is another unavoidable conductor that exists outside the circuit and will not necessarily have the same potential everywhere. Notice that if the shield is ungrounded, the noise voltages will be distributed among the four capacitances, including C2 where it will be amplified with the signal. If the shield is grounded at the amplifier common (location C), the equivalent circuit indicates that C2-C3 is shorted for the noise sources. All the noise voltage drops across C4. In this configuration, the shield ground should be made where the common conductor is grounded. If the circuit is grounded elsewhere, another equivalent circuit would need to be developed to determine the optimum shield grounding location.

For lengths exceeding 1/20th of the noise wavelength, the shield begins to behave like an antenna and is no longer at a constant potential its entire length. Because the shield potential varies, noise will be capacitively coupled to the conductors. The shield may be grounded at several locations through capacitors to try to maintain a constant high-frequency potential. The capacitors would prevent low-frequency ground loops from being formed but can create high-frequency resonances. This is not a very practical solution for long cable runs. An alternative is to abandon the shield where it may cause more problems than it solves and use other techniques to minimize noise. An example of this is Ethernet unshielded twisted pair (UTP) cable. The UTP cable is used in very long runs with signals of more than 10 MHz. To minimize common-mode noise a balanced configuration is used.

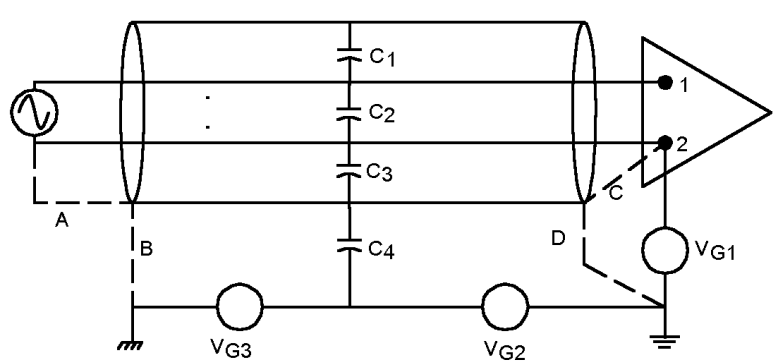

Figure 10-3—Model for analyzing shield effectiveness

 Copyright © 2006 IEEE. All rights reserved.

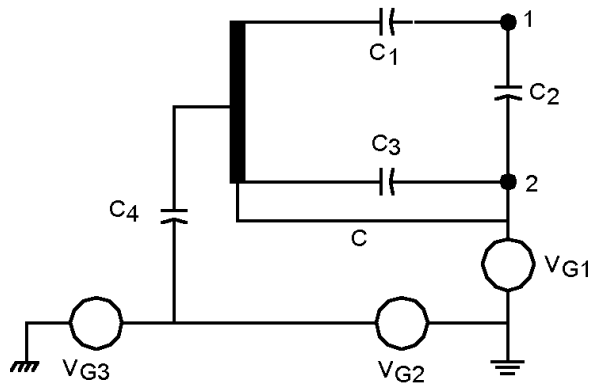

Figure 10-4—Equivalent circuit for model in Figure 10.3

Low-frequency magnetic fields are a significant source of noise. A cable shield grounded at both ends forms a loop with ground. The magnetic fields present from other conductors, equipment, and stray currents will induce voltages in the loop that appear as common-mode noise voltage sources. The radiating or receiving effectiveness depends on the loop area and the frequency. Minimizing the loop area will reduce the generated noise voltage. Twisting the conductors will minimize the loop area for magnetically induced noise voltage on the signal conductors for balanced inputs. A common-mode loop formed by the conductors and ground will result in the same level of magnetically induced noise at both conductors. To reduce common-mode noise, the conductors should be routed as close as possible to the panel (ground) surface to reduce loop area that involves ground. Both techniques work well to reduce the magnetic fields generated by high-current devices.

Diversion provides a low-permeability alternate magnetic path for a magnetic field. An example would be steel conduit around conductors. Since the steel provides a very high permeability path around the conductors, the magnetic field will tend to be concentrated in the conduit and very little will exist outside the conduit. If the field saturates the steel, the “shielding” effect will be severely reduced.

Use of a ground plane is very effective for noise control. This concept gained widespread use in multilayer printed circuit boards (PCBs) where a ground layer is provided. Traces on other layers will have a minimum loop area with the ground layer, and it is much easier to provide a high-frequency equipotential conductor as a plane rather than a wire. The control cabinet has a built-in ground plane in the back plate where components are mounted. Conductors routed against the back plate will have a minimal common-mode loop area for magnetic interference. Shielding for components or wiring requires only a metal barrier to be mounted on the back plate. Component and conductor shielding is more effective because the back plate behaves as an equipotential plane to bond shields to.

Much attention is focused on idealized shields using infinite conductors and perfectly sealed enclosures. Real systems have conductors wired to terminal blocks and holes in the cabinets for conduit, push buttons, and displays. Conductor shields and twisting must be maintained as closely as possible to the terminating connection. The ground connection for shields should be adjacent to the conductor terminations. Routing the shield drain wire 20 cm (7.9 in) to the nearest grounding block creates a large loop area with the conductors that will produce significant magnetically induced common-mode noise. Similarly, connectors should have shields enclosing the conductors throughout the connector.

Cabinet openings are vulnerable to electromagnetic radiation from the outside. The greatest leakage will occur when the linear dimension of the opening is more than one-half wavelength. Even for lower frequencies, there can be significant leakage. The lower limit is generally considered to be 1/20th of the

Copyright © 2006 IEEE. All rights reserved.

wavelength. The components installed in the openings should provide a complete metallic barrier over the opening.

10.3 Method of analysis

This subclause provides a method of attack for noise control based on the theory already discussed. The specialty of grounding and noise control involves many other issues than those covered in this chapter. However, the basics presented should provide the reader with the capability to effectively deal with many of the situations encountered in actual systems. The remaining situations can be addressed by investigating the resources in 10.6 or by consulting an engineer who specializes in electromagnetic compatibility (EMC).

The steps necessary to analyze a situation are as follows:

a) Identify potential sources and receptors
b) Identify the noise circuit (common and/or normal mode)
c) Estimate the frequency of interference
d) Determine the mechanism (magnetic, electric, or electromagnetic)
e) Model the system
f) Identify alternatives to minimize interference

Items b) through d) and f) have been discussed. A guide to identifying common industrial sources and receptors is shown in Table 10-2.

Table 10-2—Common industrial interference sources and receptors

Sources	Receptors
Hard switched inductive loads	Analog circuits
PWM drive output	Encoder and registration interfaces
Switched-mode power supplies	Logic circuits
Microprocessor clocks	Communication and interface networks
Contact switching	—
Ungrounded power supplies	—

Hard switched inductive loads are defined as those that are mechanically switched. It does not include solid-state switched loads.

The most common techniques to prevent problems are listed in Table 10-3.

Bonding is the process of connection to ground to minimize loop areas, maximize shielding, and minimize ground potential differences within the system. Segregation is one of the most powerful methods of noise control. It includes how equipment is powered, where it is located, and how associated wiring is routed. For powering, noisy devices (like starters) should not share the same step down transformer as sensitive devices like PLCs. The noise introduced will be seen by the other components on the transformer. Components like drives should not be positioned in the cabinets near sensitive components such as analog I/O to minimize magnetic and capacitive noise coupling. For the same reason, high-energy and low-energy wiring should be separated from each other to prevent coupling.

 Copyright © 2006 IEEE. All rights reserved.

Table 10-3—Common industrial interference solutions

Method	Definition
Bonding	Maintaining all metalwork at the same electrical potential. This method is low cost and the basis for all other methods. It works by ensuring all equipment chassis are at the same potential at all frequencies. If different potentials exist the voltage difference is seen as common-mode noise on all interconnecting wiring.
Segregation	Physically separating sources and victims of electrical noise. This includes wiring, components, and power sources.
Shielding	Using shielded cable and steel barriers (Faraday cage effect) to reduce electrical noise. Because of its relatively high cost, shielding is used with discretion.
Filtering	Using low-pass filters to attenuate RF noise. Relatively low cost but impractical for every wire.
Clamping	Using overvoltage protective devices to limit impulsive voltages that can excite oscillations or produce high *dv/dt*. Useful for specific threat mitigation and is relatively low cost. Failure modes of the devices must be considered.

Shielding helps reduce noise coupling when segregation techniques are not practical. It also creates a system that is robust to noise. Filters using ferrites and capacitors to filter high-frequency (megahertz) noise can be very effective. It is not, however, effective for low-frequency noise where the required inductances and capacitors become very large.

10.4 Recommended practices

10.4.1 Grounding

10.4.1.1 Power system

The facility power can be grounded or ungrounded. A grounded system will have lower common-mode noise than an ungrounded system in the same situation. There are other issues associated with how the power system will be grounded. IEEE Std 141™-1993 [B1] and IEEE Std 142™-1991 [B2] discuss the advantages and disadvantages of various grounding schemes.

An ungrounded system is considered more reliable since it can tolerate a ground fault without tripping equipment. However, locating a ground fault on an ungrounded system can be very time consuming and, if not removed, reduces the system reliability. A second ground fault can become a phase-to-phase fault, trip protective devices, and shut down equipment. Ungrounded systems are susceptible to ferroresonance and transient overvoltages. Ferroresonance is a chaotic resonance between the cable-to-ground capacitance and grounded inductances (like ground light transformers) that can produce phase-to-ground voltages of five times normal. Such a condition can damage equipment directly connected at the facility distribution voltage. However, equipment fed by isolation or other transformers will not experience the overvoltage.

An ungrounded system can be converted to a high-resistance grounded system. Such a system has the reliability benefits of ungrounded system, but the grounding resistance dampens the ferroresonance.

A grounded system should promptly isolate a ground fault by tripping a protective device. Nevertheless, in situations where there is main ground-fault protection without downstream ground-fault protection, a ground fault can trip the main ground-fault device before the downstream fuses or circuit breakers.

Copyright © 2006 IEEE. All rights reserved.

Many factors must be considered in choosing a facility power distribution system grounding technique. Even if an ungrounded system is chosen, a grounded isolation transformer should be added to feed the cabinet to eliminate the upstream common-mode noise.

10.4.1.2 Cabinet

A grounding conductor should be provided with the phase conductors and bonded to the cabinet back plate. The grounding conductor should be terminated to the ground bus of the power equipment supplying the cabinet.

An unfortunately common practice with no physical basis suggested that a ground rod be driven at the cabinet to provide "true" ground and provide a path for noise to ground. This practice should not be allowed for the following reasons:

a) The perception that the ground rod provides a true ground can lead to isolation of the cabinet from the plant "dirty" electrical grounding system. This is an NEC violation. During fault conditions, the potential of the cabinet may be different from the plant ground system resulting in possible personnel shock hazard. If a supplementary ground rod is added, it must be bonded to the equipment grounding conductor (EGC).

b) Tests have shown that a single ground rod driven in the middle of a facility is ineffective. Most facilities have an extensive grounding system that provides an impedance to earth of a 100 times less than the single ground rod.

c) Noise must follow a closed path back to the source. Most noise paths are either completely contained in the cabinet or involve nearby grounded structures. Few paths will actually involve earth.

Attachments for cabinet grounding must not introduce impedance in the grounding paths or rely upon soldered or painted connections. It is recommended the back plate be electrogalvanized steel or other uncoated conductive material.

10.4.1.3 Ground plane

The ground plane principle was originally developed by PCB designers for high-frequency circuits. In multilayer PCBs, a minimum of two copper layers are used with one being designated the ground or common. This layer covers as large an area as possible. The fundamental property of a ground plane is that every point on its surface is at the same potential (low impedance) at all frequencies of concern. The highest impedance shape conductor at high frequencies is long and narrow (a wire). The lowest impedance shape is as wide as it is long, such as a square or circle.

At frequencies greater than approximately 1 MHz, the ground plane principle is more effective than single-point grounding (SPG). Inside a control cabinet, an SPG is manifested as a ground bus where all the grounding conductors from components are terminated. As an example, consider a 1 m (3.3 ft) grounding conductor connected from a component to the "ground bus." The length of the conductor corresponds to one-quarter wavelength for 75 MHz. This means that, for all intents and purposes, the grounding conductor is an open circuit near 75 MHz and its multiples. A ground plane does not have these choke points.

The control cabinet has a built-in ground plane in the cabinet back plate. It is recommended that the back plate be used for the ground plane.

Suggested guidelines are as follows:

a) The back plate should be electrogalvanized rather than painted. Paint must be scraped and makes for an uncertain connection.

 Copyright © 2006 IEEE. All rights reserved.

b) All incoming grounding conductors should be connected to the back plate where they enter the cabinet.

c) Grounding conductors from components inside the cabinet should be connected to the back plate with as short a conductor length as is reasonable adjacent to the component.

d) A braided flat grounding conductor should be connected between the back plate and the door, even if there are no door-mounted components.

e) The control circuit common should be grounded.

f) Some products do not permit grounding of the control common, but may allow grounding to chassis via a 1.0 μF, 50 V ceramic capacitor. Check the installation manual for details.

10.4.1.4 Adjacent panels

Bond adjacent panels by mounting multiple flat straps between the panels. As an alternative, mount a filler plate between the panels using multiple fasteners along the edges of the plate. See Figure 10-5.

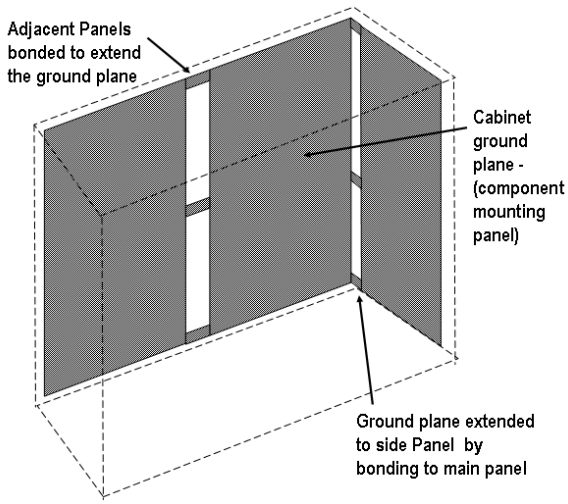

Reprinted from Allen Bradley Co.

Figure 10-5—Panel ground plane extended to adjacent panels

10.4.1.5 Machine structure

If a machine structure covers a large portion of the system area and is constructed of a conductive material with all sections closely bonded, then it too will form an excellent ground plane (Figure 10-6). Care should be taken to ensure paint is removed at the bonds and the connections protected against corrosion.

Bond the panel(s) to the machine structure as tight as possible, but if this proves difficult, construct a low-impedance path using the following guidelines:

a) Use a zinc-plated tray, as wide as practical, and join sections by overlapping with several fasteners across the width. The perforations will not reduce performance.

b) EMC trunking (plated at joint surfaces with conductive gaskets) also makes a good bond.

c) Short and wide is the requirement for any high-frequency bonding material. Panel(s) should be located as close to the machine structure as practical, and the bond should be firmly attached at both the machine structure and the control panel (not the cabinet outer panels).

d) Multiple trays/trunking are better.

Note that copper wire safety earth bonding is still required. See Figure 10-6 and Figure 10-7.

Copyright © 2006 IEEE. All rights reserved.

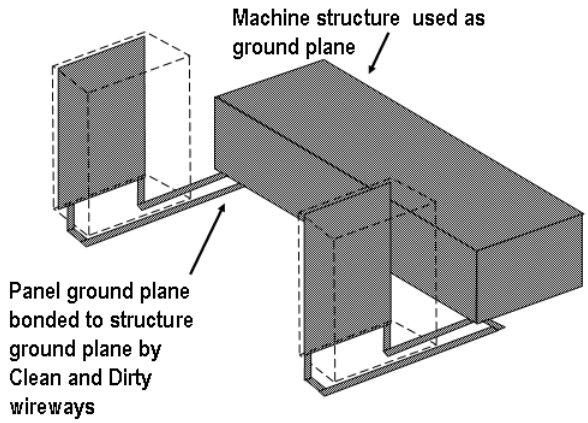

Figure 10-6—Panel ground plane extended to the machine structure

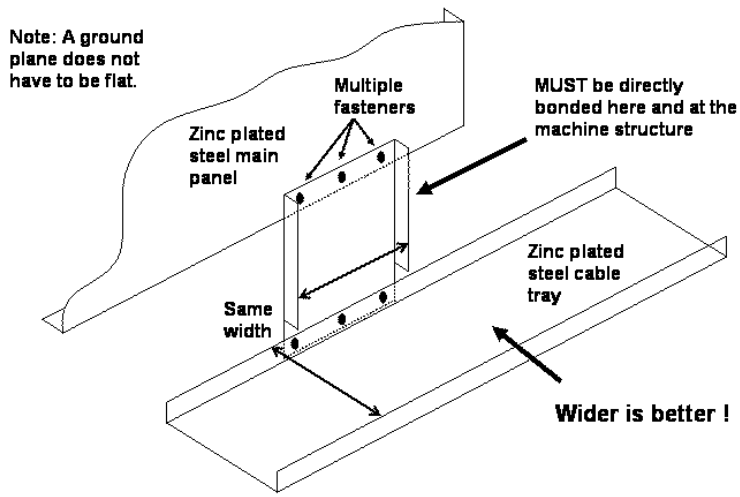

Figure 10-7—Extending the panel ground plane using cable tray

10.4.2 Power

Power is normally provided to the process or cabinet at the low voltage level that is available in the facility by a single feed. Other voltages or supplies are derived from the feed including different voltages for electronics, electromechanical devices, and motion control. DC power supplies are available to be powered directly from the incoming supply or by a stepped down control voltage.

10.4.2.1 Isolation transformer

One of the benefits of an isolation transformer at the load is reduced common-mode noise. A grounded system will have lower common-mode noise than an ungrounded system in the same situation. The common-mode circuit is between the conductors under consideration and the next up stream system neutral-to-ground bond or, in the case of ungrounded system, an equivalent phase capacitance to ground. The remainder of the common-mode circuit is through the facility grounding system back to the cabinet. This circuit can form a large loop area that will have noise voltage induced by any magnetic fields coupling the loop. A grounded system will have a neutral-to-ground bond closer to the cabinet and a much smaller loop area. Consequently, the grounded system will have less common-mode noise than an ungrounded system. The key factor is how far away the actual or equivalent system ground is. Adding an isolation transformer at

 Copyright © 2006 IEEE. All rights reserved.

the load with a secondary neutral that can be bonded to ground will eliminate the upstream common-mode noise.

A shielded isolation transformer will also help reduce normal-mode noise. The shield is a conductive foil between the primary and secondary windings and reduces noise under 100 kHz. The shield must be grounded to function properly.

Isolation transformers or reactors are sometimes added to increase the impedance for drives or other large three-phase power electronic equipment. Such devices operate best with source impedance of 2% to 5% of the rated load base. Reactors are less expensive than transformers. A transformer should be used if a different voltage is required or local neutral-to-ground bond is desired. Other loads should not be connected to the secondary of the drive isolation transformer or reactor. Because of the necessary ratings, the secondary voltage is highly distorted and could disrupt other equipment. An impedance device should be added on the feed to each device. Sharing the reactor or transformer among several loads is not effective.

Installation guidelines are as follows:

a) Bond the transformer secondary neutral to ground.

b) Install the isolation transformer as close as possible to the cabinet being served.

c) Bond the transformer shield to the frame and to the cabinet with braided conductor.

d) Segregate the isolation transformer primary and secondary conductors as far as possible. Do not route the conductors in the same raceway.

10.4.2.2 Control power

Control voltage usually must be stepped down from the cabinet supply voltage for controllers and relays. It is recommended that separate control transformers be provided for low-noise and high-noise loads. The low noise and high noise terms are discussed in 10.4.3. See Figure 10-8.

High noise control loads are starters, solenoids, cabinet lighting, and high-current I/O. Low-noise sensitive loads include any control electronics such as PLCs, communications, or computer numerical control (CNC) equipment.

The control power transformer secondary should always be grounded to reduce common-mode noise. It was often found in old systems that ungrounded ac control power was provided for PLC I/O. This practice is deprecated. The thinking was that an ungrounded system is more reliable because one line can fault to ground without disrupting the system. Since the I/O wiring often extends well beyond the cabinet, it would be vulnerable to ground faults. However, for the system to work, ground faults must be rigorously cleared. Most facilities do not operate the equipment to such a level of maintenance. Whatever incremental control reliability would be gained is more than offset by the greater vulnerability of the control power to common-mode noise.

Separate dc power supplies should be provided for sensitive loads and electromechanical loads. In addition to the noise generated by electromechanical loads, they also have large pull-in current surges. Even with regulated dc power supplies, the sudden current loads can cause undesirable voltage variation. The impedance of the cabinet power distribution system will create further voltage fluctuations for the sensitive loads due to current surges.

Large (often three phase) dc power supplies are not recommended. The large units are usually intended to serve all the dc loads and encourage mixing of loads that should not share the same power supply.

Copyright © 2006 IEEE. All rights reserved.

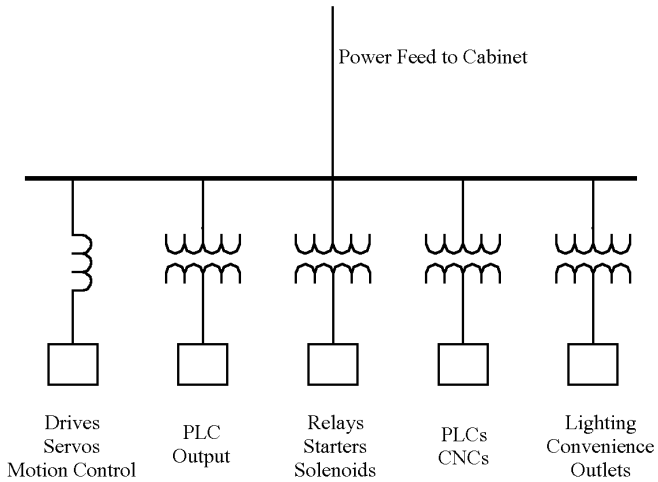

Figure 10-8—Recommended grouping of power feeds to control cabinet components

10.4.3 Segregation

Separation of sensitive receptor components from noisy source components is the basis of segregation. Segregation applies to power sources, components, and wiring. Segregation of power sources was discussed in 10.4.2.

10.4.3.1 Components

Component separation should be part of the layout plan of the cabinet. A process that must be performed will result in a list of required components. The designer must decide how many control cabinets are required, what they will contain, and where they will be located. If there is more than one cabinet required, it would be desirable to locate the sensitive components in one cabinet and the source components in the other. If both source and receptor must be in the same cabinet, they should be located on opposite sides and grouped. To help identify the sources, Table 10-4 lists some common components and classifies them according to their potential for interference. Those with adjacent X's straddle the classifications.

Table 10-4—Component categories

Component	Very noisy	Noisy	Sensitive
PWM drives/amplifiers[a]	X	X	X
Dynamic braking components	X	—	—
External dump resistor (unshielded)	X	—	—
External dump resistor (shielded)[b]	—	X	—
AC line filter	X	X	—
Dump resistor module (metal-clad)[b]	—	X	—
Switch-mode dc power supply	—	X	—
Ultrasonic transducer	X	—	—
Contactors	—	X	—

 Copyright © 2006 IEEE. All rights reserved.

Table 10-4—Component categories *(continued)*

Component	Very noisy	Noisy	Sensitive
Switched dc 24 V loads[c] (e.g., E-stop, solenoids, relays)	—	X	—
Encoder buffer board	—	—	X
PLC	—	—	X
Registration 24 V dc supply filter	—	—	X
Noisy to sensitive filter	—	X	X
Linear dc power supply	—	—	X
Other 24 V dc unswitched loads	—	—	X
Data/communication devices	—	—	X
Analog devices	—	—	X

[a]The connector/terminal block locations on the device will normally dictate the zone geometry since it normally has connections in all categories. Design zones around the drive(s).
[b]Bond chassis to the main panel or device chassis.
[c]All inductive switched loads must be suppressed.

Separation is an effective mechanism since the near fields decrease by one over the second or third power of the distance. Nevertheless, there is limited space available and shielding must also be applied. Grounded metallic partitions between the source and receptor devices will minimize electrostatic coupling. If the partition is steel, it will help contain magnetic fields by diversion.

Separating compartments within a cabinet into zones aids in segregation. The zones use distance or shielding to isolate the more noisy equipment from the more sensitive equipment.

Figure 10.9 shows three zones can be created in a standard panel or cabinet enclosure. The very noisy items are placed in the right/front section. The noisy items are placed behind them in the right/rear section and the sensitive items are placed in the left/rear section.

A side panel can be fitted on the right to support the power cable shield clamps and any very noisy wires, cables, or components. This leaves the main panel free for the sensitive and noisy zones.

NOTE—It is preferable to mount control and motion control equipment in a separate cabinet away from power control equipment (motor starters, etc.).[2]

[2]Notes in text, tables, and figures are given for information only and do not contain requirements needed to implement the recommended practice.

Copyright © 2006 IEEE. All rights reserved.

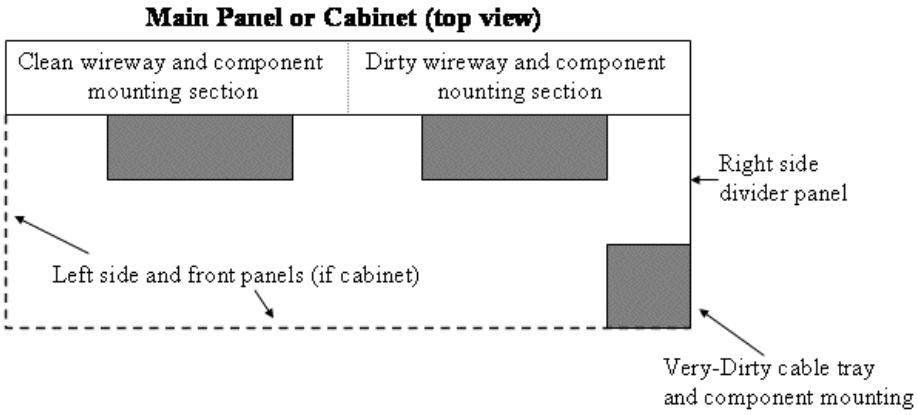

Figure 10-9—Relative position of noise zones on the panel

10.4.3.2 Conductors

Conductor segregation minimizes the possibility of interaction between noisy and sensitive systems. Table 10-5 shows the best zone for running cables and wires. It also shows how the use of ferrite sleeves and shielded cable can reduce the noise effects of noisy and very noisy wires and cables.

Table 10-5—Cable and wire categories by component

Cable and wire category	Zone			Method	
	Very noisy	Noisy	Low noise	Ferrite sleeve[a]	Shielded cable[b]
Three phase between line filter and drive	X	—	—	—	—
Extended dc bus	—	X	—	—	X
PWM drive/inverter to motor power	X	—	—	—	X
Sine wave filter to motor	—	X	—	—	—
External dump shunt resistor	X	—	—	—	—
Contactor to ac motor	X	—	—	—	—
Three-phase supply power	—	X	—	—	—
Single-phase supply power	—	X	—	—	—
24 V hydraulic/pneumatic—solenoids	—	X	—	—	—
Motor feedback resolver	—	—	X	—	X
PLC digital I/O	—	X	—	—	—
Dedicated drive inputs (except registration)	—	X	—	—	—
Limit switches	—	X	—	—	—
Push buttons	—	X	—	—	—
Proximity switches (except registration)	—	X	—	—	—
Photoelectric cell	—	—	X	—	—

 Copyright © 2006 IEEE. All rights reserved.

Table 10-5—Cable and wire categories by component *(continued)*

Cable and wire category	Zone			Method	
	Very noisy	Noisy	Low noise	Ferrite sleeve[a]	Shielded cable[b]
24 V dc relay	—	X	—	—	—
Data/communications	—	—	X	X	X
Encoder/resolver	—	—	X	—	X
Logic circuit power	—	—	X	—	X
High-speed registration inputs	—	—	X	—	X
PLC analog I/O	—	—	X	—	X
PLC high-speed counter input	—	—	X	—	X

[a]An X in this column indicates a ferrite sleeve fitted to the wire is recommended.
[b]An X in this column indicates a shielded cable is recommended.

Table 10-6 offers a general description of the noise categories and relates the categories to a similar system suggested in IEEE Std 518™-1982 [B3].

Table 10-6—Guidelines for grouping conductors with respect to noise

Group conductor cable fitting this description	Into this category	Examples
Conductors that are susceptible to noise and do not act as a source of noise. Corresponds to IEEE 518 Level 1 (high susceptibility)	Low noise	Position encoders and resolvers; data lines Thermocouples, strain gauges, high-speed counters DC power to sensitive loads Analog I/O lines Communication cables (Ethernet; RS-232-C, RS-422, RS423 cables, etc.)
Conductors that can couple noise to other nearby conductors and connect devices that are moderately tolerant of noise. Corresponds to IEEE 518 Level 2 (medium susceptibility) and 3 Level (low susceptibility)	Noisy	Relay, starter, and solenoid conductors (ac or dc) Switched-mode power supply (SMPS) line and dc sides Control power PLC digital I/O Power conductors <600 V and <20 A Power conditioners
Conductors that readily couple noise to other nearby conductors. Corresponds to IEEE 518 Level 4 (power)	Very noisy	PWM inverter to motor conductors Thyristor three-phase ac inputs and dc outputs (dc drives, etc.) Power conductors <600 V and >20 A

Copyright © 2006 IEEE. All rights reserved.

10.4.3.3 Within panels

Figure 10-10 and Figure 10-11 provide examples of how to route sensitive, noisy, and very noisy wireways or cable trays within a panel.

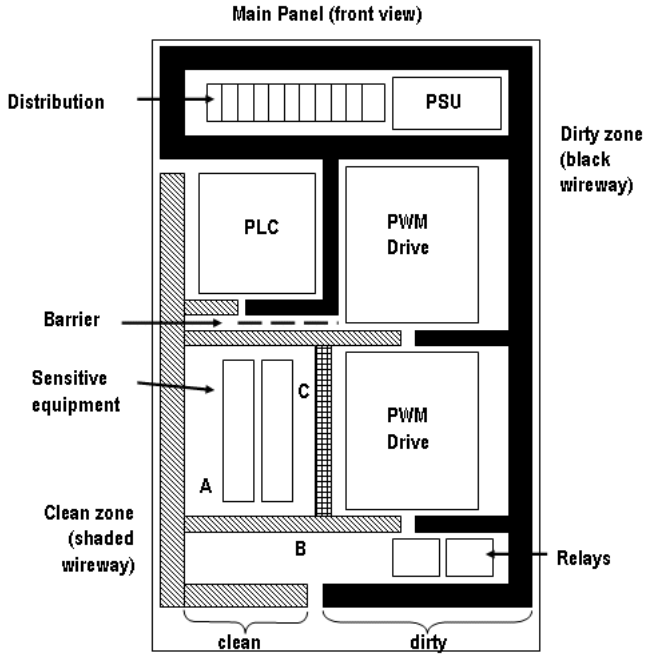

Figure 10-10—Routing sensitive and noisy cables

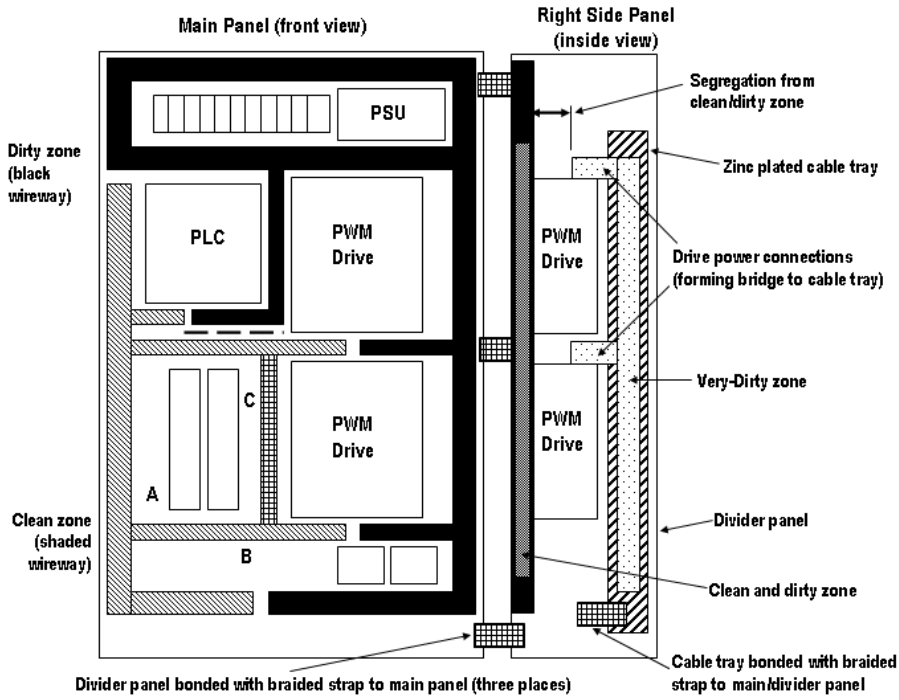

Figure 10-11—Routing very noisy cables

 Copyright © 2006 IEEE. All rights reserved.

Observe the following guidelines when planning the panel layout for low-noise and noisy cables:

a) A plated steel barrier between sensitive and noisy wireways allows them to run close together.

b) If noisy power is required at A, then run it via wireway B using shielded cable.

c) The vertical wireway at C is not good practice as it encourages the creation of loops.

d) The use of different colored wireways (e.g., gray for low noise and black for noisy) encourages good segregation.

Observe the following guidelines when planning your panel layout for very noisy cables:

1) Power cables bridge across to the drive terminals from the cable tray on the right.

2) The cable tray is bonded to the divider panel using braided strap. If no divider panel is used, then bond cable tray to main panel.

3) A divider panel is used on the right to segregate very noisy wiring from the low-noise zone of the next panel to the right (see Figure 10-12).

4) The divider panel is bonded with braided straps to the main panel at top, center, and bottom.

5) Use 25.4 mm (1.0 in) wide braided strap for bonding (preferred method). Braided strap 12.7 mm (0.5 in) wide is acceptable.

To guard against coupling noise from one conductor to another, follow these general guidelines when routing wires and cables (both inside and outside of an enclosure). Use the spacing given in these general guidelines with the following exceptions:

— Where connection points (for conductors of different categories) on a device are closer together than the specified spacing

— Application-specific configuration for which the spacing is described in a publication for that specific application

Furthermore, all conductors (ac or dc) in the same raceway must be insulated for the highest voltage applied to any one of the conductors in the raceway.

Sometimes low-noise conductors must traverse high noise regions in the cabinet or vice versa. In those cases, the conductors should be shielded.

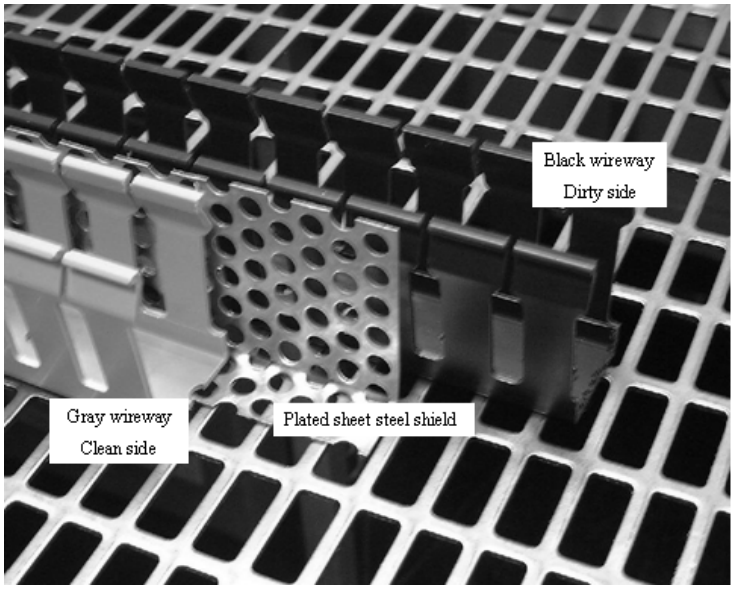

Figure 10-12—Example of steel barrier to segregate low-noise and high-noise channels

Copyright © 2006 IEEE. All rights reserved.

It is often difficult to segregate effectively in a confined space. When strict segregation is not practical, minimize overlap and cross cables at right angles. Test results show that even a close parallel run of 0.5 m (20.0 in) will allow significant noise coupling.

Wiring designated noisy or very noisy can be converted to the next lower category by means of shielding using either shielded cable or conduit where required. Figure 10-13 show how this technique may be used to mix categories without breaking the segregation guidelines.

Power supply units (PSUs) may be safer to use.

10.4.3.4 Shielded cables

Generally, most low-level sensitive circuits should have electrostatic shielding. See 10.2.4.

Circumstances determine how the shield should be grounded. Short cables with low-frequency noise are grounded at one end only. Long cables with high-frequency noise may require grounding at both ends or high-frequency grounding with capacitors (0.1 μF). The optimum shield grounding location is found from the analysis method presented in 10.2.4.

Ground each shield at the end specified in the appropriate publication for the product. Never connect a shield to the common side of a logic circuit (this would introduce noise into the logic circuit). Connect each shield directly to a chassis ground.

The shield should not be grounded by a long pigtail to a ground connection. Figure 10-15 shows recommended methods of shield grounding that do not compromise the signal integrity.

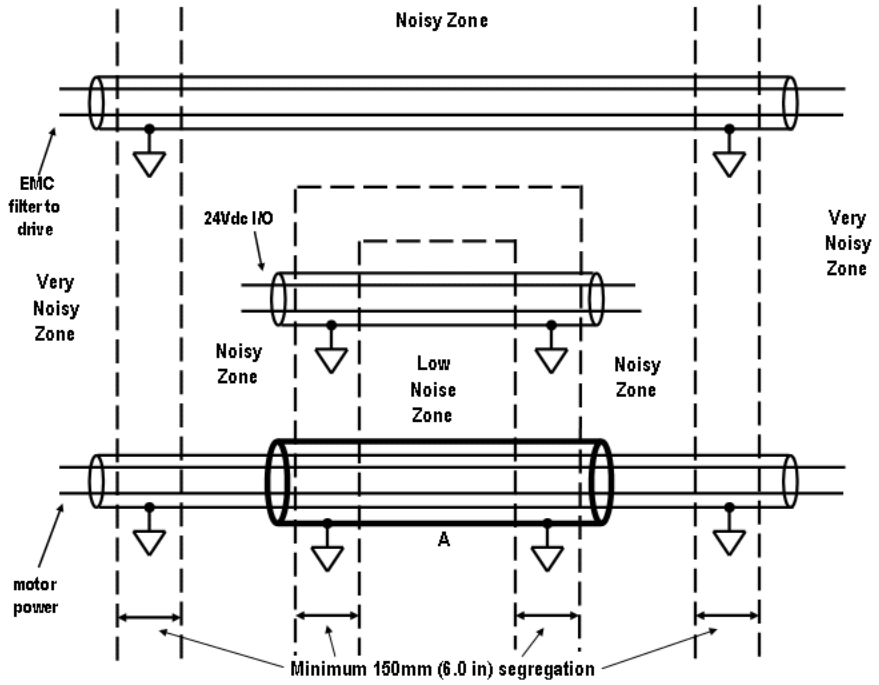

Figure 10-13—Very noisy cable in low-noise zone

 Copyright © 2006 IEEE. All rights reserved.

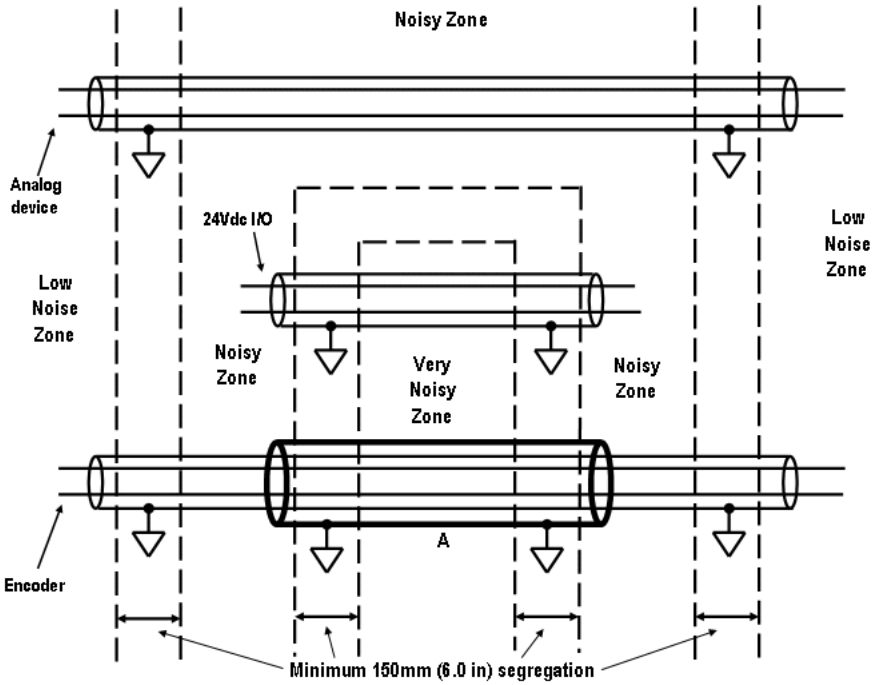

Figure 10-14—Low-noise cable in very noisy zone

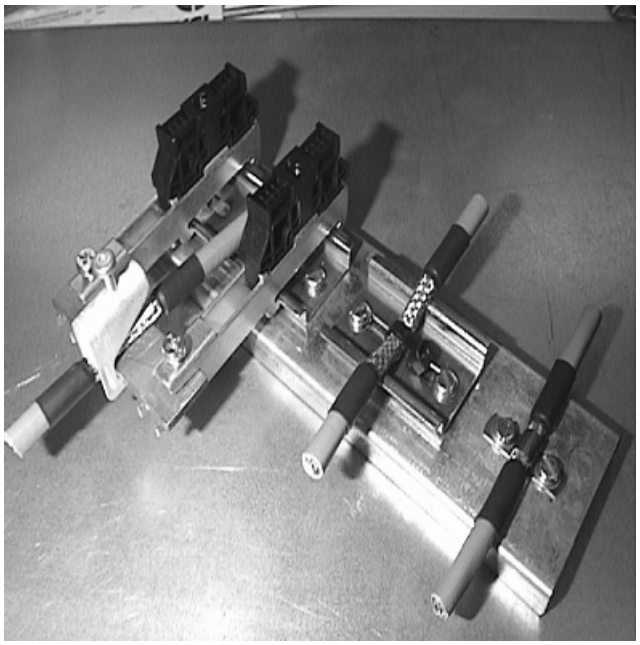

Figure 10-15—Cable shield grounding methods

Copyright © 2006 IEEE. All rights reserved.

Communications networks are potentially sensitive to noise by design. Differential (balanced) communications are not as sensitive to noise because in a truly balanced differential system the noise will be seen as common mode. In these types of communications systems, there are two properties that affect network performance in noise; they are common-mode limits of the receiving electronics and the balance of the entire link between any two communicating devices. Any unbalance in the network will cause common-mode noise to appear as differential noise. There will be communications errors as a result of differential noise when present in a system at significant levels.

Most communications networks use the local cabinet ground terminating the shields of the communications cables. The most common noises found at these grounds are relatively low in frequency with respect to the signaling rates of the communications networks. However, most communications networks use some type of baseband signaling scheme. This requires the communications cabling to provide bandwidths from dc to roughly twice the signaling rate of the network. This presents problems when referencing the shields to noisy grounds. Most systems use hybrid terminations for shields to block the dc or lower frequency noise from producing currents in the cable shields (see Figure 10-16). The hybrid terminations provide excellent termination of the cable shields at high frequencies while blocking dc. The hybrid circuits typically consist of a parallel resistor/capacitor (RC) circuit with a transient suppressor to protect the network from large magnitude transients like those produced by lightning and inductive loads. In order for the shield to be most effective at high frequencies and high currents, it is imperative that connections to ground be as short as possible.

Avoid breaking shields at junction boxes. Many types of connectors for shielded conductors are available from various manufacturers. If a shield is broken at a junction box, do the following:

a) Do not strip the shield back any further than necessary to make a connection.

b) Connect the shields of the two cable segments to ensure continuity along the entire length of the cable.

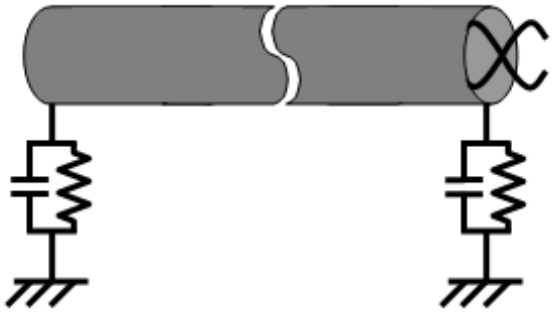

Figure 10-16—Hybrid grounding

10.4.3.5 Drives

ASDs require special segregation. Pulse width modulated (PWM) drives use insulated gate bipolar transistors (IGBTs) in the inverter section with switching speeds of 100 ns to 200 ns. The rise and fall times of the pulses associated with the voltage waveform will correspond to this time interval. The high switching speeds generate noise in the drive to motor cable that can be disruptive to other equipment in the control cabinet and along the motor cable runs. Figure 10-17 shows the configuration for a PWM drive. Figure 10-18 and Figure 10-19 show the phase-to-phase voltage waveform of the inverter to the motor and the motor current waveform.

 Copyright © 2006 IEEE. All rights reserved.

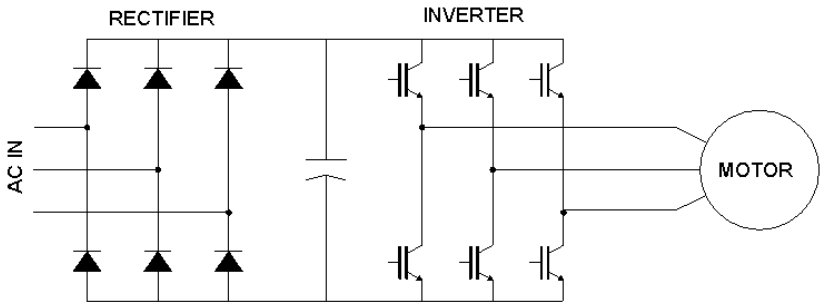

Figure 10-17—Diagram of PWM drive

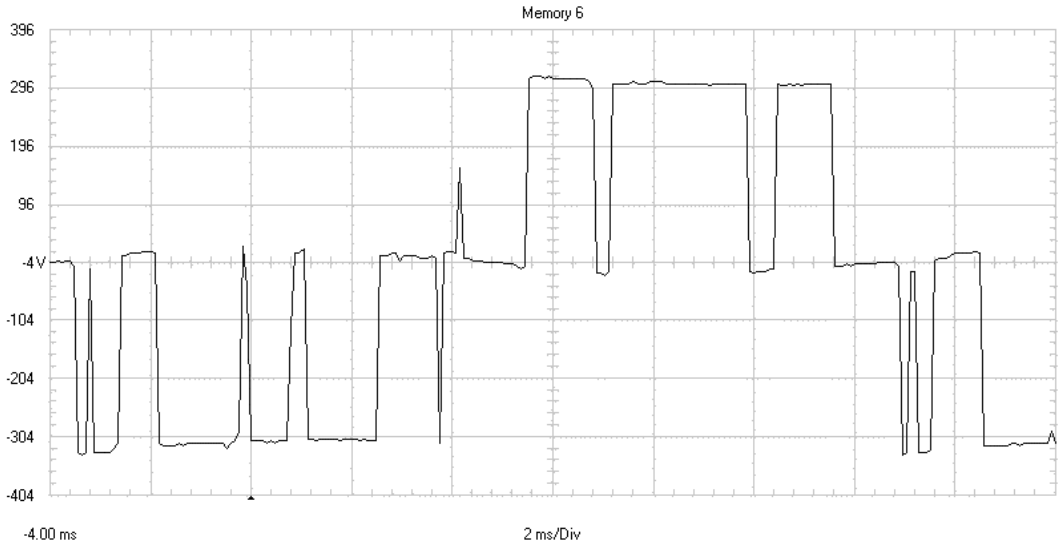

Figure 10-18—Phase to phase voltage of ASD inverter output

The motor current waveform (Figure 10-19) shows a reasonable sinusoid current of fundamental frequency with impulses corresponding to some of the voltage pulse edges. The inductance of the motor acts as a low-pass filter and reduces the lower order harmonic components in the current.

Assuming the rise time of the phase-to-phase voltage is 100 ns, the expected worst-case frequency is shown in Equation (10.5):

$$\frac{1}{\pi 100\text{ns}} = 3.2\text{MHz} \tag{10.5}$$

Copyright © 2006 IEEE. All rights reserved.

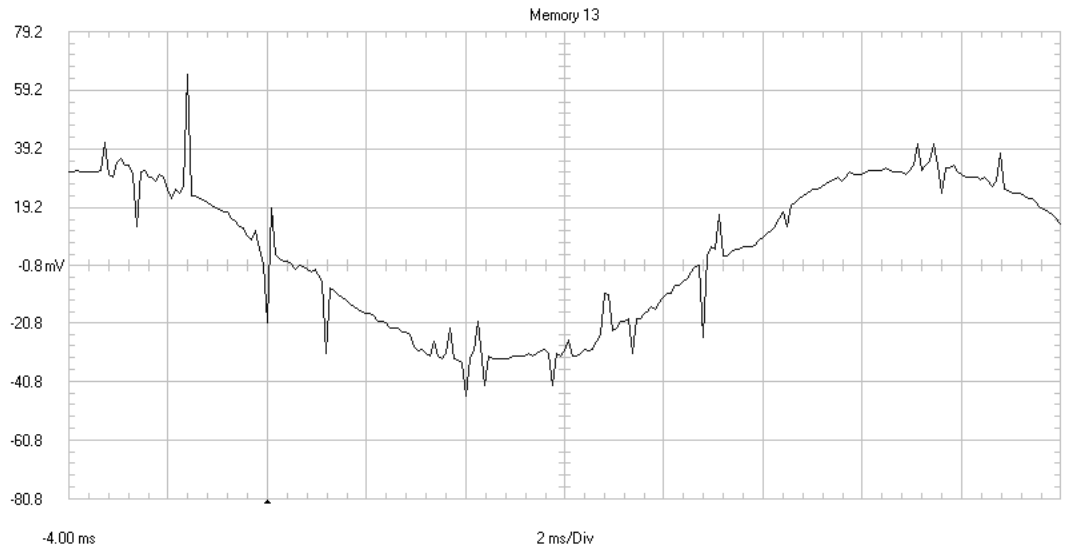

Figure 10-19—Inverter output phase current

The cables from the inverter to the motor will be copious emitters of noise. It is recommended that the conductors always be routed in conduit without any other conductors. The conduit will help reduce magnetic and electric noise. They should never be installed in cable trays with other conductors. They should not share conduit with the ac feed to the drive. Shielded three-conductor power cable is available for smaller conductor sizes and may be used in place of conduit. The shield should be grounded at both ends to help contain the common-mode ground current. Unless a grounding conductor is run with the cable, the cross-sectional area of the shield must be sufficient to conduct potential ground-fault current.

There are also issues with very long inverter to motor cables. The wavelength of the worst-case frequency computed in Equation (10.5) is about 100 m (328 ft). Applying the 1/20th wavelength rule yields a distance of about 5 m (16.4 ft) in air. This is the maximum length that can be considered with the conductors at uniform potential. At greater distances the cable behaves increasing like a traveling wave transmission line. Reflections can occur at the ends resulting in very high transient voltages applied to the inverter and motor.

The motor cable also loads the drive. Cables have a large inter-phase capacitance per foot. The total capacitance may divert a significant portion of the inverter current from the motor.

The inverter to motor cable should be as short as practical. Manufacturers provide maximum lengths. If a manufacturers recommendation is not available, the NEMA recommended drive installations practices should be followed (see NEMA [B5]). If the length recommendations are exceeded, the manufacturer should be consulted. Special cables and filters at the inverter and motor ends may be required.

10.4.4 Filtering

The filtering discussed in this subclause consists of contact transient suppression, dc power supply filtering, and filtering when transversing different noise zones.

10.4.4.1 Contact suppression

One potential noise source that can be reduced directly is transient voltage induced by interrupting a switched inductive load. Even circuits feeding resistive loads will produce significant switching noise due to inductance of the wiring. The arcing due to mechanical switching can also introduce high-frequency noise. Thus, any switch contact will benefit from suppression.

 Copyright © 2006 IEEE. All rights reserved.

It is recommended that all switched inductive loads in the system be suppressed. This is standard practice in any industrial control system.

Examples of ac devices requiring contact suppression include the following:

a) Solenoid coils
b) Contactor coils
c) Relay coils
d) Transformer primaries
e) Transformer-driven indicator lamps
f) Fluorescent cabinet lights (also requires line filters close to the lamp)
g) Line filters (often present an inductive load)

The only exception is a load driven by a *zero-crossing detector* circuit such as solid-state outputs. Zero-crossing switches reduce noise generation virtually to zero. These are preferred for frequent operation or near low-noise zones.

NOTE—Sometimes the supply to a group of zero-crossing triac outputs is switched by a mechanical contact for safety purposes. Suppress at the contact in this case.

The waveform in Figure 10-20 displays a 600 V transient as the result of interruption of current to the coil of a 120 V control relay.

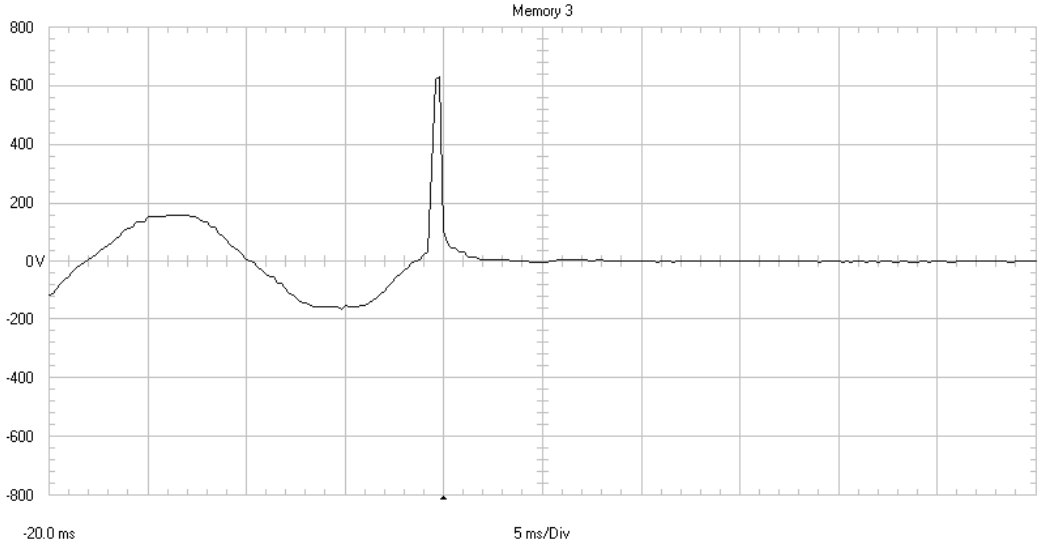

Figure 10-20—Unsuppressed inductive transient across control relay coil

The waveform in Figure 10-21 displays the effects of a metal-oxide varistor (MOV) suppressor added across the coil of the relay tested in Figure 10-20. The peak of the transient is reduced from 600 V to about 240 V.

The suppressor has reduced the transient voltage but not eliminated it. Switched inductive loads should be on separate ac power supplies from sensitive loads even though they have suppressors.

In the example, a metal-oxide varistor (MOV) was used. However, MOVs degrade with use. A permanent suppressor should rely primarily on resistors, capacitors, or diodes. The MOV should only serve as backup. An RC network will also help reduce noise due to arcing of the switch.

The typical RC suppressor circuit (Figure 10-22) consists of a 0.1 μF capacitor in series with a 100 Ω resistor.

Copyright © 2006 IEEE. All rights reserved.

The typical RC plus MOV circuit (Figure 10-23) consists of the RC network shown in Figure 10-22 in parallel with an MOV. These are used in high-current, high-energy applications such as motor starters.

The suppressor across the contact (Figure 10-24, lower) reduces the noise from the wiring inductance as well as the coil inductance.

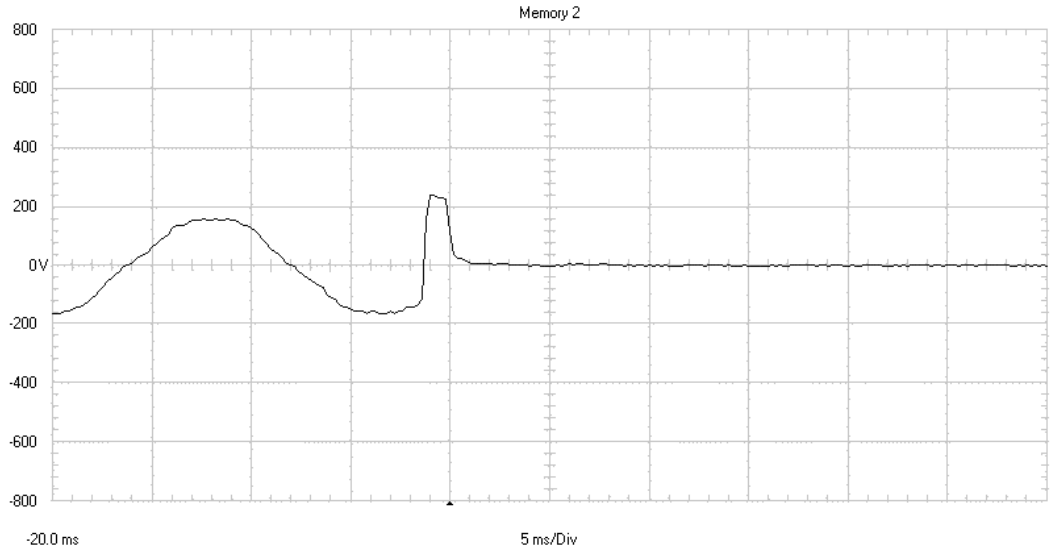

Figure 10-21—Transient with suppressor across relay coil terminals

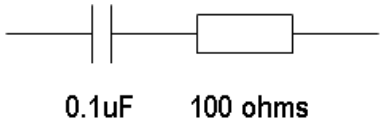

Figure 10-22—RC suppressor circuit

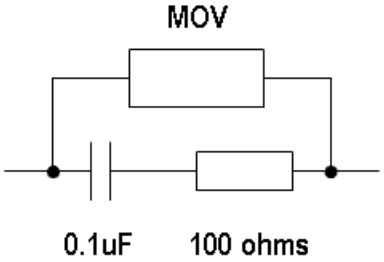

Figure 10-23—RC plus transient absorber circuit

 Copyright © 2006 IEEE. All rights reserved.

Examples of dc devices requiring contact suppression include the following:

1) Solenoid coils

2) Contactor coils

3) Relay coils

First choice for dc circuit suppression is a flywheel diode (Figure 10-25), but this does increase the release time, which may not be acceptable in all applications. A Zener diode can be placed in series with the flywheel diode to quickly dissipate the coil energy and decrease the coil release time compared with the diode alone.

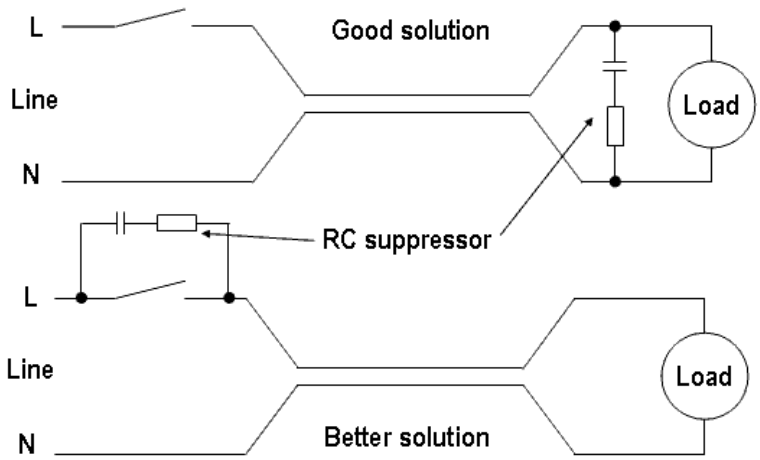

Figure 10-24—RC suppressor in circuit

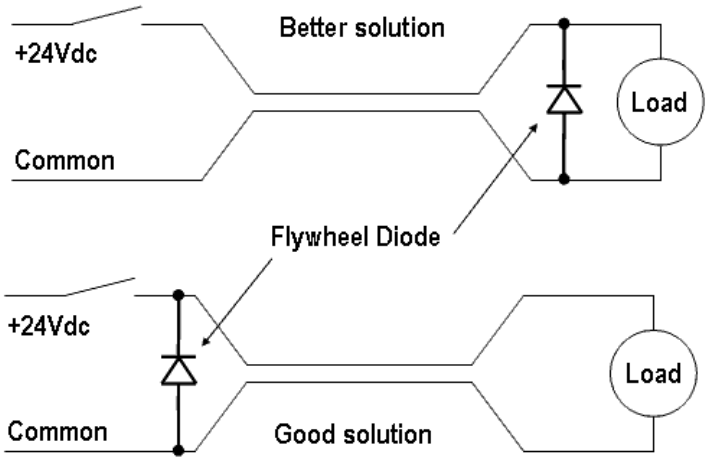

Figure 10-25—Flywheel diode

Copyright © 2006 IEEE. All rights reserved.

10.4.4.2 DC power supplies

The output of linear dc power supplies is relatively low noise. However, the input and output of switched-mode power supplies can contain switching frequencies or other noise. Ungrounded dc power supply outputs should be avoided if at all possible because of the susceptibility of ungrounded systems to common-mode noise. As components, switched-mode power supplies should be considered noisy, and linear power supplies as low noise.

Capacitors and ferrite sleeves should be applied to the output of SMPS. The dc supply should be filtered when transversing noisy and sensitive zones.

Linear power supplies normally generate very little noise, but ac line filters or dc output filters are required to attenuate incoming line noise to achieve a low-noise category.

To avoid noise related problems caused by 24 V dc power supplies, observe the following guidelines:

a) Connect the common through a ground terminal.
b) Decouple the +24 V dc line to the same ground terminal with a 1 mF, 50 V ceramic capacitor to achieve the low-noise category.

The simplest method for making the ground connection is to use a ground terminal installed on the DIN rail fastened to a zinc plated panel. Refer to Figure 10-26 for an example of the symbol used in diagrams.

10.4.4.3 Switched-mode power supplies

In Figure 10-27, a DC 24 V supply is mounted in the noisy zone, because it may create noise. But the noise is reduced by filtering before the output enters the low-noise zone. Minimum recommended separation between zones is 15 cm (6 in).

Grounded, decoupling capacitors are used at each sensitive load. Provided the system is correctly bonded, the multiple common/ground connections are not a problem. The copper becomes a back-up conductor. No segregation or filtering is necessary for the load in the noisy zone.

In Figure 10-28, a filter is pictured between the low-noise zone (gray wireway) and the noisy zone (black wireway).

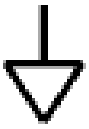

Figure 10-26—Direct connect to ground plane symbol

 Copyright © 2006 IEEE. All rights reserved.

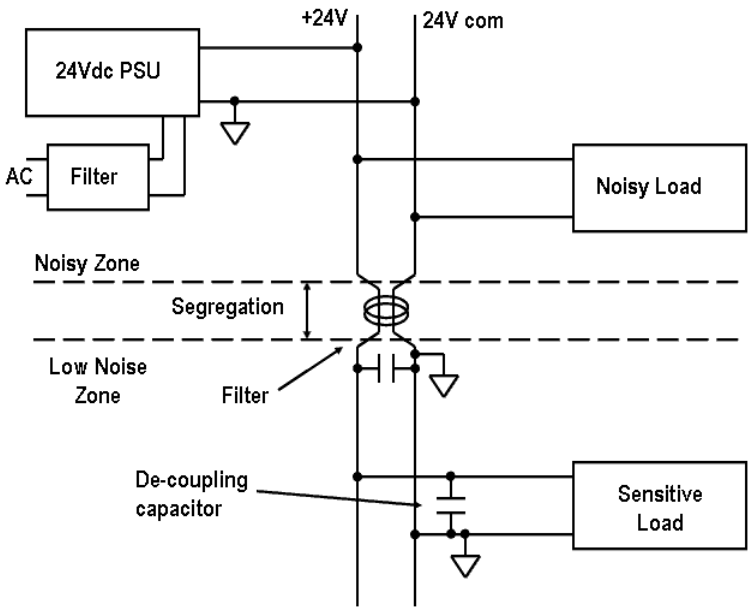

Figure 10-27—DC 24 V power distribution with single PSU

10.4.4.3.1 Special applications for ungrounded dc common

If it is necessary to maintain a floating common from the dc power supply *(not recommended),* a modified filter may be used to ground the common at high frequencies only as shown in Figure 10-29.

If the dual PSU configuration is used, ground the low-noise supply common *(highly recommended)* and float the noisy supply.

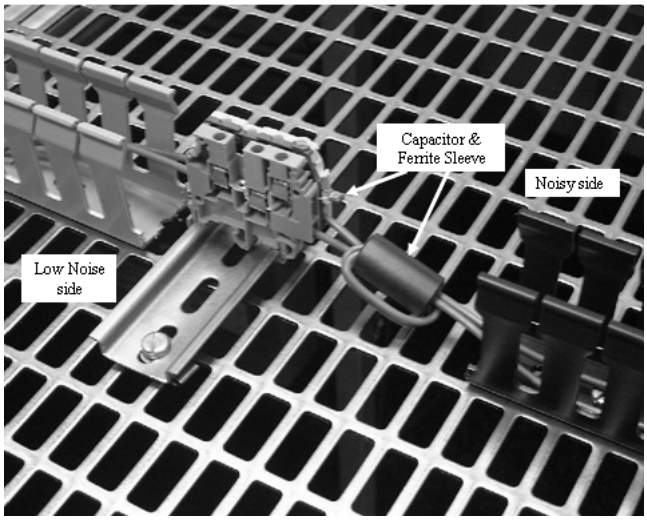

Figure 10-28—Filter between zones

Copyright © 2006 IEEE. All rights reserved.

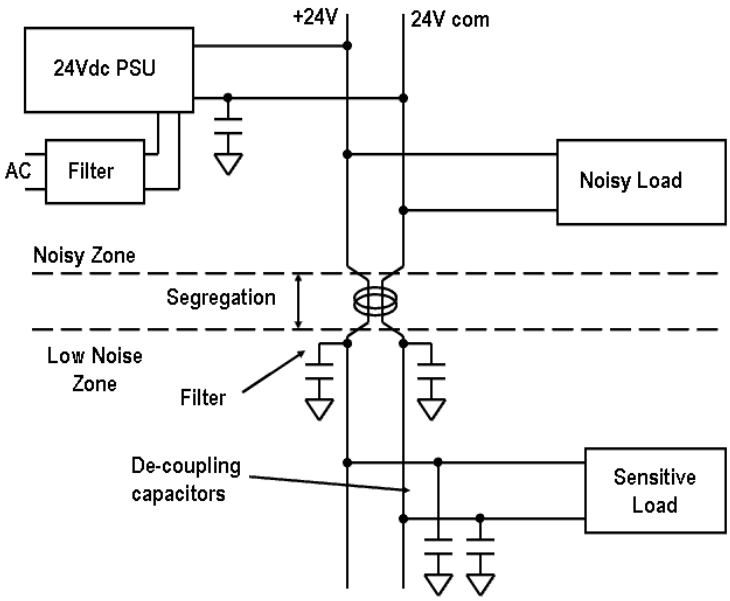

Figure 10-29—Floating Common

10.4.4.4 Linear power supply

The linear PSU does not generate noise on its ac terminals, as does a switch-mode supply; however, some noise reduction provisions are still recommended.

In Figure 10-30, the linear power supply is mounted in the low-noise zone, but the ac line feeding it requires filtering. The ac line filter is positioned between zones and attenuates line noise, which may otherwise be passed through to the dc circuit.

10.4.4.4.1 Linear PSU mounted in noisy zone

In Figure 10-31, no ac line filter is required because the linear PSU does not generate noise and the ac line noise is filtered by the dc filter.

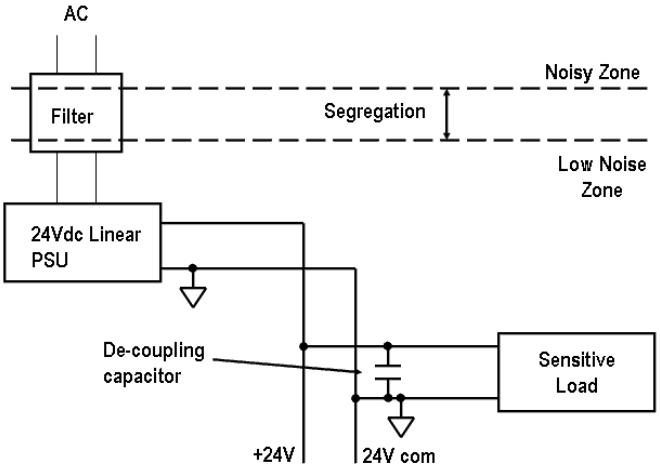

Figure 10-30—Linear PSU mounted in low-noise zone

 Copyright © 2006 IEEE. All rights reserved.

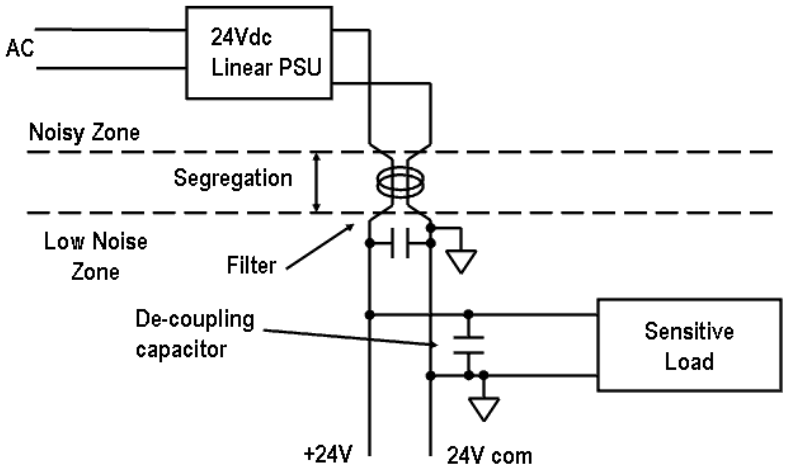

Figure 10-31—PSU mounted in noisy zone

10.5 Distance, long power cable runs

The 24 V dc lines entering or leaving panels that cannot be bonded together by flat strips (no longer than 10 times the width) should have filters at the point of entry, as shown in Figure 10-32.

NOTE—If heavy circulating currents at power frequency are likely, the floating filter technique or separate local PSUs may be safer to use.

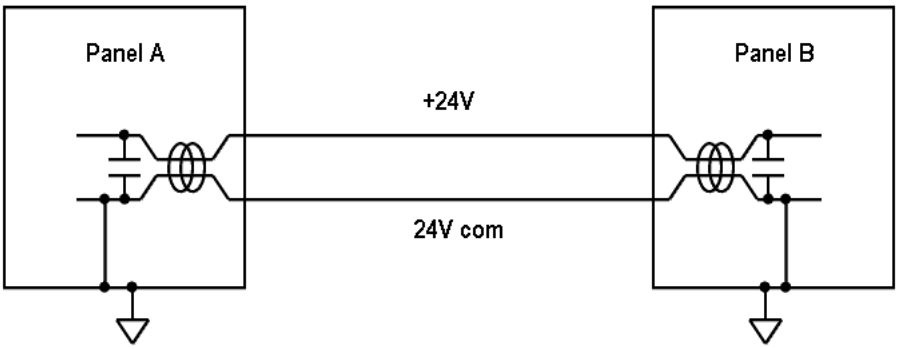

Figure 10-32—Long cable runs between panels

10.6 Bibliography

Additional information may be found in the following sources:

[B1] IEEE Std 141-1993, IEEE Recommended Practice for Electric Power Distribution for Industrial Plants *(IEEE Red Book)*.[3, 4]

[3]IEEE publications are available from the Institute of Electrical and Electronics Engineers, Inc., 445 Hoes Lane, Piscataway, NJ 08854, USA (http://standards.ieee.org/).

[4]The IEEE standards or products referred to in this subclause are trademarks of the Institute of Electrical and Electronics Engineers, Inc.

Copyright © 2006 IEEE. All rights reserved.

[B2] IEEE Std 142-1991, IEEE Recommended Practice for Grounding Industrial and Commercial Power Systems *(IEEE Green Book)*.

[B3] IEEE Std 518-1982, IEEE Guide for the Installation of Electrical Equipment to Minimize Electrical Noise Inputs to Controllers from External Sources.[5]

[B4] Morrison, R., *The Fields of Electronics*. New York: John Wiley & Sons, 2002.

[B5] NEMA, *Application Guide for AC Adjustable Speed Drive Systems,* 2001.[6]

[B6] Ott, H. W., *Noise Reduction Techniques in Electric Systems*. New York: John Wiley & Sons, 1988.

[5] IEEE Std 518-1982 has been withdrawn; however, copies can be obtained from Global Engineering, 15 Inverness Way East, Englewood, CO 80112-5704, USA, tel. (303) 792-2181 (http://global.ihs.com/).

[6]NEMA publications are available from Global Engineering Documents, 15 Inverness Way East, Englewood, CO 80112, USA (http://global.ihs.com/).

 Copyright © 2006 IEEE. All rights reserved.

Chapter 11
Case histories

11.1 Introduction

This chapter presents case histories involving typical problems that have been encountered in the powering and grounding of sensitive electronic equipment. It is hoped that readers will find that the solutions presented will be helpful in solving problems being encountered currently.

Since most of the case histories in this chapter can fit into two or more subject areas, it is suggested that readers peruse related topics as presented in the subclauses that follow.

11.2 Typical utility-sourced power quality problems

Many utilities are located in areas where lightning storms commonly occur during portions of the year. These storms are notorious for causing ground faults on both transmission lines and ac distribution lines. These faults often cause nearby utility-fed electrical equipment to power down.

Utilities try to maintain relatively constant distribution voltages, as the load mix and total power demand of their customers varies enormously. In an effort to maintain constant voltage, utilities switch large capacitor banks into and out of their transmission and distribution systems. This switching may result in voltage surges at customer sites.

Case histories of these two primary sources of utility power disturbances are presented in the following subclauses. It should always be emphasized that personnel at sensitive electronic facilities should have a good working relationship with a knowledgeable power quality consultant and with their utility company. Involvement of utility company personnel should not be adversarial, for much can be accomplished by working together to solve the problems.

11.2.1 Voltage sags due to utility fault clearing

Several real-life events can induce phase-voltage-to-ground (or neutral) shorts on the utility ac transmission and distribution system. Thunderstorms, high wind conditions, and small animals are the primary causes of these short-duration events. The typical utility response is to first reenergize the affected circuit(s). This activity often is successful in clearing the initial line fault, but also produces a momentary sag for other users on the same ac distribution system. The following case studies exemplify this problem.

Problem 1: Nuisance production interruptions during thunderstorms. A plastics film extruding facility was experiencing numerous production interruptions during thunderstorms. Detailed monitoring and analysis showed that adjustable (frequency) speed drive (ASD) motors automatically tripped off-line for voltage sags below 85% of nominal. Equipment downtime logs correlated with the local utility's logs of momentary short circuits on their distribution power line.

Solution. The ASDs were modified for a lower ac input voltage range (changed input threshold from 85% to 75% of nominal voltage). The plant ac distribution voltage, from the step- down transformer supplying the affected equipment, was increased (via changing its tap setting) to a level that allowed the equipment to ride through many of the voltage sags. This voltage change was accomplished without exceeding the maximum allowable voltage (per ANSI C84.1[1]) under normal conditions.

[1]Information on references can be found in 11.12.

Copyright © 2006 IEEE. All rights reserved.

Problem 2: Excessive assembly-line restart times after momentary ac sag conditions. An automobile transmission plant experienced numerous partial stoppages in its production line during thunderstorms. Excessive time was required to restart the affected production equipment (solid-state controllers) and to balance product flow through the total production line. Detailed monitoring and analysis showed that the most sensitive programmable logic controllers ceased functioning when the ac line voltage dropped below 87% of nominal for periods longer then 8 ms. Utility analysis showed that the mean voltage of utility-originated sags was 65% of nominal, with a mean duration of 190 ms.

Solution. Since the mean sag voltage was within the operating range of several voltage-regulating transformers, the power quality consultant recommended that voltage-regulating power conditioners be added to power the less sensitive machine tool controllers, and that small, dedicated uninterruptible power supply (UPS) be used to power the critical controllers.

11.2.2 Voltage surges due to utility power factor/voltage-regulation capacitor switching

Utilities often find it necessary to add/subtract capacitance to their ac transmission and distribution system to achieve reasonable power factors and voltage levels. When these capacitor banks are switched on and off the ac distribution system, they create phase-voltage surges. These surges appear as decaying-oscillatory surges to the user. Examples of the impact of these surges follow.

Problem 1: Nuisance production shutdown of steel mill casting process. This case involves the ASD motors at a steel mill continuous casting plant. The ASD motors drive slabs of molten steel through the casting process. When the ASDs tripped out, molten steel solidified within the casting machines and resulted in considerable production downtime. Detailed monitoring and analysis showed that ac line surges on the feeder to the ASDs had a 600 Hz to 700 Hz ringing frequency, 0.6 per unit (pu) initial amplitude, and durations of 8 ms to 10 ms. The 6 900 V feed to the building showed identical surges.

Solution. The utility added a preinsertion inductor to their capacitor bank. This inductor is momentarily placed in series with the capacitor bank when the capacitor is switched into the ac distribution system. The inductor prevented further ASD trip-outs, due to utility capacitor switching. The switching surge at the ASD (with the preinsertion inductor) had an initial amplitude of 0.2 pu and 1600 Hz ringing frequency.

Problem 2: Voltage quality concern at radio station—overvoltage. A radio station had been repeatedly frustrated by their new broadcast transmitter's operation because it would enter a failure mode on weekday mornings. The error message on the transmitter that would be displayed indicated that an "overvoltage" had occurred on the ac power line. The local electric utility had offered to provide power line monitoring at the main service entrance to determine the type of disturbance and its amplitude that was affecting the transmitter. The monitoring data had revealed that a utility timer-controlled capacitor bank's operation caused impulsive transients of amplitudes between 130 V and 150 V to randomly appear on one or more phases at a time.

Solution. The radio station's initial solution to the impulsive transients was to install surge suppressors at the input to the equipment to mitigate the events. The devices did not fix the problem and the transmitter continued to shut off during the events. The radio station was eventually convinced that an "in-line" choke that could mitigate the transients should be installed. The devices were installed and the overvoltage at the transmitter's input was reduced to an acceptable level so as to allow the transmitter's reliable operation.

Problem 3: Intermittent shutdowns of ASDs in a manufacturing plant—overvoltage. This case involves a manufacturing plant, located in the southern U.S., where 5 hp ASD motors frequently would trip-out intermittently. The result of these disruptions, on a multistage continuous-processing line, was considerable material loss and excessive line restart time. The ASD diagnostic code typically would indicate an "overvoltage on the ac power" feeding the system. Steady-state, true rms voltage readings on the 480 V, three-phase line were on the low side at 452 V to 479 V. Further measurements correlated voltage surges with utility-level power factor correction capacitor switching.

 Copyright © 2006 IEEE. All rights reserved.

Solution. Consultation with the ASD manufacturer revealed that the ASD protection circuitry was sensitive to ac overvoltage conditions for extremely short time periods (e.g., 800 V for 40 μs). The manufacturer solved the problem with the addition of transient voltage surge suppressors (TVSSs), which clamped the ac voltage to less than 750 V.

Problem 4: Shutdowns of ASDs in a manufacturing plant—overvoltage. This case involves a manufacturing plant, located in the mid-Atlantic states of the U.S., where 5 hp ASD motors frequently would trip-out. The result of these disruptions, on a multistage continuous pharmaceutical manufacturing line, was considerable material loss and excessive line restart time. There was no ASD diagnostic code. Steady-state, true rms voltage readings on the 480 V, three-phase line were on the high side at 482 V to 500 V. This voltage was within the acceptable standard for motor control centers located near the transformer, 480 V ± 10%. The condition also happen during violent changes from hot humid weather to cool, when a fast moving cold front passed through and the utility could not respond fast enough to prevent the voltage from rising.

Solution. Consultation with the ASD manufacturer revealed that the ASD protection circuitry was sensitive to ac overvoltage conditions. The design of the ASD was for a normal input voltage of 460 V, which is the voltage for the motor location, not the motor control center. At 480 V input to the ASD, the dc bus would be 800 V dc, where the overvoltage was set to trip. The manufacturer declined to resolve the problem.

Several manufacturers of TVSSs were consulted. However, this was not a transient condition, but a continuous normal supply voltage condition that the ASD could not tolerate. What was overlooked by the ASD manufacturer was the fact that ASD are usually placed at or in the motor control centers. The IEEE standards define the motor control center as a point where 480 V is normal, and at the motor, 460 V is the norm. It was decided to change the taps on the supply transformers since the voltage drop throughout the facility was minimal.

Problem 5: Repeated computer lockup and component failures in CT scan equipment at a medical clinic. Monitoring input of the 480–208 Y/120 V, three-phase transformer feeding the CT scan equipment revealed surges characteristic of utility power factor correction switching (decaying oscillatory waveform). Monitoring of the output of the same transformer showed a reduced surge, but still sufficiently severe to cause operational failure of the CT scan equipment.

Solution. Detailed analysis of the surges showed a characteristic ringing frequency of 1.0 kHz to 1.5 kHz. This allowed the specification of an active-tracking filter, specifically designed for this type of surge, to be installed.

11.3 Premises switching generated surges

The majority of ac voltage surges experienced at intermediate-sized and large user sites have been found to originate within the site itself. Switching of reactive loads is the primary cause of such surges. Following are examples of these switching surges.

Problem 1: Notching surges on the ac distribution system. After installing a 1000 hp solid-state dc drive, a manufacturing plant began to have operating problems with existing solid-state equipment, connected to the same 480 V, three-phase distribution system. The distribution system supplying the dc drive was an ungrounded system. Operational problems of the nearby electronic equipment were attributed to the line-voltage notching. These notches were caused by the new solid-state dc drive.

Line-voltage notching is produced during motor-control commutation. When the current flowing in one phase suddenly stops and this same current suddenly starts to flow in a different phase, a voltage notch occurs. Since the line has finite inductance, which prevents instantaneous changes in current flow, a momentary short-circuit occurs between phase and ground during this transition. Actually this is a

Copyright © 2006 IEEE. All rights reserved.

commutation of turning one thyristor off by turning on another thyristor, resulting in brief short circuit until the device commutates off.

Solution. A shielded isolation transformer was installed on large dc drives to isolate their commutation-produced ac line voltage notching from other voltage sensitive solid-state equipment. The shielded isolation transformer acted to reduce the commutation. (See IEEE Std 519™-1992 [B2].[2])

Problem 2: Solid-state ASDs. A manufacturing facility could not keep their ASD motors running. The input fuses on the ASDs were open-circuited on a regular reoccurring basis. A log of the ASD fuse failures was made. This was compared to the utility outages and other external causes. The result of the comparison indicated numerous unaccounted fuse failures. A digital power disturbance analyzer was installed and used to indicate the power quality at the drives.

The disturbance analyzer indicated a high concentration of power disturbances. These disturbances were mostly phase-neutral voltage surges, originating from within the building. Significant neutral-ground voltages were also observed. The disturbances were being generated primarily by the ASDs themselves and causing other nearby ASDs to malfunction.

Solution. Shielded isolation transformers and TVSS devices on each ASD solved the problem.

11.4 Electronic loads

Electronic loads are generally nonlinear, which results in the generation of harmonic currents. These harmonic currents circulate within the ac distribution system, which supplies power to the electronic loads. These harmonic currents contribute to I^2R heating within the ac distribution system and can cause considerable voltage waveform distortion. Following are case studies that deal with harmonic currents and their impacts on the ac distribution system.

11.4.1 Uninterruptible power supply—unfiltered input

Static UPSs are nonlinear loads on the ac distribution system, and as such they generate and feed back harmonic currents into the ac distribution system. These harmonic currents can negatively impact other sensitive electronic equipment on the same ac distribution system.

Problem: Office copier lockup and laser printer data errors. A southwestern university constructed a new classroom facility near two existing (large) computer room UPSs and fed the new facility from the same ac distribution that fed the UPSs. Office equipment, with high-current-consuming electronically controlled heaters in the new classroom facility, experienced repeated data errors and often lock-up. User personnel were able to make the office equipment temporarily operational by switching off and on the ac power to the equipment. No equipment damage occurred.

After minor miswirings were corrected in both the neutral and equipment grounding conductors (EGCs), power quality analyzer results showed that severe phase-voltage notches (from the UPS) and common-mode noise voltages ranged from 5 V to 35 V. Initial attempts to solve the problem with a nonoptimized (50 dB) filtering circuit, normal- and common-mode TVSS, a shielded isolation transformer, and a dedicated (line interactive) UPS failed.

Solution. Additional waveforms captured by the power quality analyzer showed that the line interactive UPS did succeed in eliminating the phase-voltage notches, but since its design did not bond its output neutral with the EGC, it was ineffective in reducing the common-mode noise. Conversely, the shielded isolation transformer was shown to be effective in reducing the common-mode noise, but not the phase-voltage

[2]The numbers in brackets correspond to those of the bibliography in 11.13.

 Copyright © 2006 IEEE. All rights reserved.

notching. Armed with this data, the power quality consultant recommended that a device be employed that could both regenerate the phase voltage and establish a local neutral-ground bond. Installation (near the sensitive equipment) of a simple ferroresonant transformer, with its secondary neutral bonded to the EGC, and TVSS, allowed for error-free operation of the office equipment.

11.4.2 UPS—Unfiltered output

Static UPSs, not equipped with sufficient output filtering, supply their loads with harmonic-rich voltage waveforms and are generally unable to fully filter harmonic currents generated by their electronic loads. This situation may result in both the misoperation of load equipment and overheating of components in the UPS output distribution system.

Problem: Semiconductor production test equipment malfunction. A major semiconductor manufacturer was experiencing erratic yields from a group of wafer-level production testers. Initially, power issues were not suspected due to the testers being supplied from a UPS.

A power analyzer indicated that the UPS was supplying power with a high level of voltage distortion to the test equipment. The problem was confirmed when the equipment feed was switched to an adjacent utility source and the tester immediately started logging repeatable results.

Solution. The UPS manufacturer added to the output voltage feed a 5% total harmonic distortion (THD) filter to the existing installed UPS, and it showed the same repeatable test results as attained when the tester was powered by normal utility power.

11.4.3 Automated office

Automated offices have, as a significant fraction of their total electrical power consumption, nonlinear load equipment. This includes such equipment as computers, terminals, printers, copiers, and fax machines. All the triplen-harmonic currents generated by this equipment are returned on the neutral conductors (between the electronic loads and their separately derived source) of the ac distribution system. Historical practice has been to reduce the size of ac distribution neutral conductors. Present usage patterns of automated office equipment can be at odds with the original ac distribution system design assumptions, which may result in misoperation of sensitive electronic equipment and excess heating of ac distribution elements.

Problem 1: Intermittent data memory errors and data transmission errors between remote terminals and a central computer system. In the installation of a multistory office building, several floors of modular workstations were powered from a common, three-phase, step-down transformer with a shared neutral. Mainframe terminals in these workstations experienced intermittent data memory errors and data transmission errors, and occasionally experienced hardware failures.

The power quality analyzer showed that considerable (and variable) neutral current existed and that the neutral-ground voltage mirrored the neutral current flow. Root-mean-square (rms) values of neutral-ground voltage did not exceed 3.7 V, but the peak voltage ranged up to 10 V, which was well above the logic and signal voltage levels. The analyzer also showed phase-voltage switching surges up to 800 V.

Solution. Each floor of the building was isolated into two sections via shielded isolation transformers, with TVSS. Individual neutral conductors were installed for all workstation branch circuits. Reestablishment of the neutral-ground bond at the new isolation transformers, combined with the reduced neutral current in the dedicated neutrals, reduced neutral-ground voltages to less than 2 V.

Problem 2: Engineering laboratory with offices adjacent. The computer system used by laboratory personnel had intermittent failures and data errors. Typically, the misoperations would start around 10:00 A.M., but the timing was variable, and on some days there were no failures at all.

Copyright © 2006 IEEE. All rights reserved.

Power quality analyzer measurements showed very regularly timed repetitive sags in the phase voltage, beginning just after 10:00 A.M. Close analysis of the data showed corresponding surges between neutral-ground conductors. Additional investigation located a laser printer in a nearby office, whose "print fusing heater" switched on approximately every minute. The high-current demand and resulting voltage developed between the neutral and EGCs caused the computer system data errors.

Solution. The offending laser printer was moved to another branch circuit thereby eliminating its interaction with the computer system's neutral conductor.

11.4.4 Interaction between power factor/voltage-regulation capacitors and electronic loads

Harmonic currents generated within electronic loads can result in excessive heating of ac distribution and transmission components. In severe cases, the excess currents result in ac distribution or ac transmission system malfunctions.

Problem 1: Excessive failures of utility capacitor bank overcurrent protectors. An industrial plant, supplied from two parallel transformers totaling 7500 kVA, has an 1800 kvar capacitor bank for voltage regulation. The electric utility had experienced two main problems with their capacitor bank, as follows:

a) The capacitor circuit breaker overheated, with temperatures exceeding 70 °C.

b) Both 100 A individual capacitor can fuses and 3000 A main line fuses were blowing.

The harmonic content of the load current varied continuously. The 5th harmonic was by far the largest at 1080 A. This was approximately 23.5% of the 4600 A fundamental current.

Although the resonant frequency of the system is close to the 6th harmonic, the 5th harmonic current increased in the capacitor by a factor of 2.5, or 2700 A. With the 5th harmonic current alone, the total rms current in the capacitor was 64% higher than the fundamental current of 2077 A, and greater than the ampere rating of the capacitor fuses. These conditions were bad enough, but at the customer's peak load current of 6400 A (30% higher), the conditions were worse.

Solution. Since the plant personnel were unwilling to spend any money to reduce the 5th harmonic, the utility had to remove the capacitors. This resulted in the voltage regulation at the plant to be significantly worse. A more correct solution would have been to add filtering for the 5th harmonic current and to assess the voltage capabilities of the existing power factor correction capacitors.

11.5 Premises-wiring-related problems

Many of the power quality problems found in service industry facilities are associated with faulty premise wiring. Following are identified major types of premise-wiring-related problem areas.

11.5.1 Service problems

Problem: Neutral fluctuations due to poor connections. A shopping center had complaints about lights flickering in two of the businesses. The customers are served from a 120/208 V overhead bank of transformers. Two service risers feed metering troughs with six customers on each.

A utility line crew had replaced a transformer in the bank a few weeks prior to the call because a neutral bushing had burned up. A distribution engineer had spoken with all tenants in the shopping center, and only two had noticed any problems since the transformer had been replaced. These tenants included a restaurant that had lighting with dimmer switches, and a clothier who only noticed the problem in the bathroom when the fan was running.

 Copyright © 2006 IEEE. All rights reserved.

The engineer had visited the shopping center on three different occasions and had only noticed a flicker one of the times. Initial voltage readings indicated 125 V, L-N on all three phases. Finally, a voltage recorder was installed to monitor the voltage on the service panel in the clothier shop (see Figure 11-1).

Solution. The recording voltmeter data indicated a bad neutral connection because of the high- and low-voltage readings on different phases. The voltage readings were normal for several hours before the neutral shift occurred. Further investigation by the line crew found that there was a bad connection on the four-hole pad that connected the main service neutral to the service conductors. Apparently, the connection had heated up when the neutral bushing had failed earlier.

Only the customers who had incandescent lighting had been able to notice the problem.

Complaints such as lights flickering, or lights getting bright and dim, are usually related to loose connections and/or the cycling of heavy loads. Connections can be checked with the use of a voltmeter or an infrared scanner.

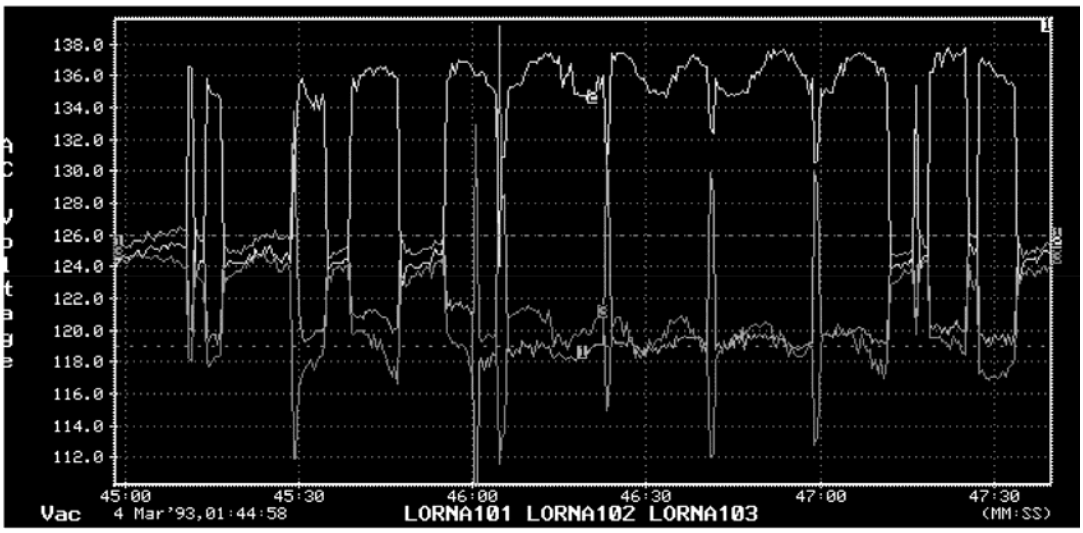

Figure 11-1—Voltage profile

11.5.2 Feeder and branch circuit level miswiring

Problem: Ground conductor on outside of conduit. A computer manufacturer required the electrical contractor to install 4 AWG insulated ground wire on the outside of the conduit, which carried its associated electrical power conductors. The insulated ground wire was tie-wrapped to the conduit. The manufacturer wanted the ground wire to be separated from the power conductors, yet he wanted to use the same ground wire. The electrical inspector rejected this installation on the basis that the impedance was increased. The National Electrical Code® (NEC®) (NFPA 70, 2005 Edition) requires a sufficiently low impedance to trip the circuit.

Solution. The recommended practice is to have the ground conductor on the inside, not the outside, of the conduit. When this change was implemented, the electrical inspector approved the installation.

11.5.3 Receptacle level miswiring

Problem 1: Miswired receptacle on personal computer (PC). An automobile parts store was having difficulty getting their PC to operate. The PC would frequently lock-up or experience other unexplained failures. A check of the utility company's outages did not reveal any correlation between them and the

Copyright © 2006 IEEE. All rights reserved.

equipment problems. The power outlet serving the computer was examined for polarity, revealing that the phase and the neutral conductors were reversed at the receptacle.

Solution. Once the conductors were correctly connected, the PC in the automobile parts store ran without any problems.

Problem 2: Miswired PC power strip—improper grounding connections. A school's computer lab was experiencing erratic reboots and lockups of its network computer system. After installation of a power line analyzer, the problems stopped. When the monitor was removed, they returned. A different-type monitor by the same manufacturer was installed. It recorded many neutral-ground impulses on top of an over 40 V neutral-ground waveform.

The lab had been recently built and professionally wired with dedicated circuits to the file servers. All three servers were fed from the same surge suppressor strip. By analyzing the accompanying N-G impulse waveform (see Figure 11-2), it was easy to see the ground connection is missing.

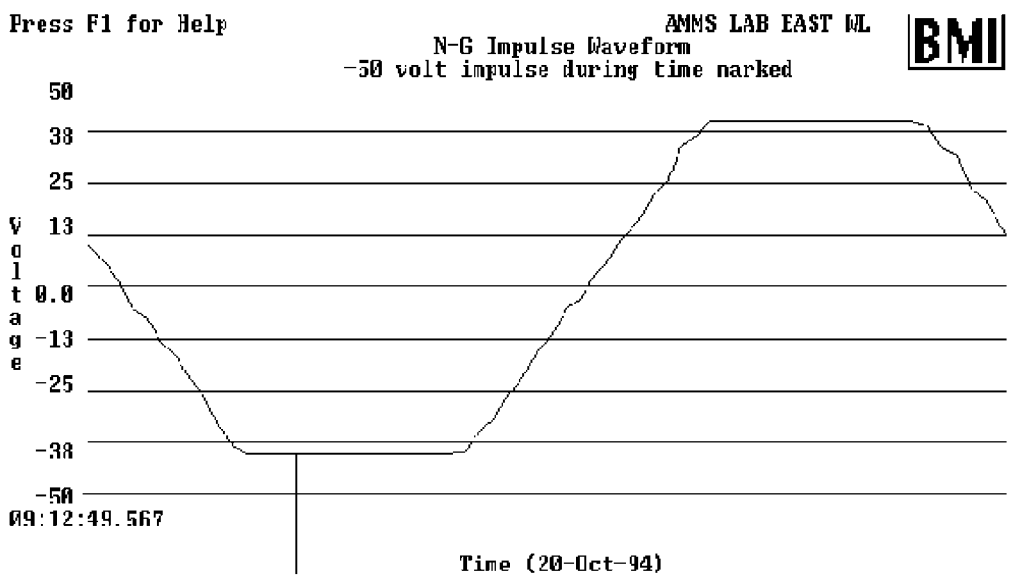

Figure 11-2—Neutral-to-ground impulse waveform

Solution. After disassembling the surge suppressor (see Figure 11-3), it was found that the green wire was soldered to the metal case of the strip. The connection of the ground pin was then made through a spring connection to the removable back of the suppressor case. This might have been adequate if the inside of the back of the suppressor had not been painted. The paint resulted in no ground connection being made.

The first analyzer was powered from a correctly wired wall outlet. The monitor cord was plugged into the problem surge suppressor strip, thereby providing a temporary, inadvertent ground path through the monitor. So as long as the meter was installed, the computers worked fine. The second analyzer was plugged into and powered from the defective surge suppressor strip. This allowed for no stray ground paths and resulted in detection of the problem.

The strip was replaced and the problem was solved.

 Copyright © 2006 IEEE. All rights reserved.

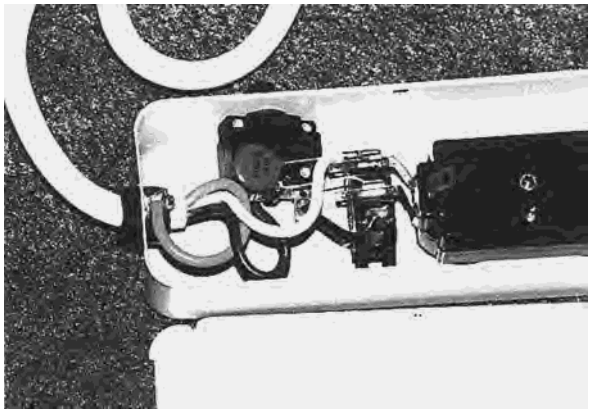

Figure 11-3—Disassembled surge suppressor

Problem 3: Telephone company (telco) equipment lightning damage. A midwestern industrial company had experienced lightning damage to their telephone equipment, which would result in varying duration of phone service interruption. The phone company that was responsible for the maintenance of the telephone equipment was replacing an average of $40,000 of printed circuit boards (PCBs) at the conclusion of every thunderstorm. Typically, the customer would pay for lightning damage; however, the salesperson for the phone company had written a 9-year lightning "waiver," which rested all liability for lightning damage with the phone company.

The phone company suspected that improper grounding of the telco equipment and its peripherals may have caused voltage drops within the facility, which would account for the equipment destruction. A two-point bonding measurement was made between all available grounding electrode terminations at the site. This testing revealed that an effective, low-resistance bonding existed between electrode terminations. However, the site still continued to experience lightning damage to the telco equipment.

Solution. Later investigations unveiled that the conductor used to connect the telephone lightning protectors grounding terminals to an earthing reference was found to be coiled up with approximately 12.2 m (40 ft) of wire (see Figure 11-4). It is likely that the length and routing of this conductor created an excessive amount of impedance, which may have rendered this path for lightning dissipation ineffective for the travel of high-frequency, high-energy surge currents. The routing of the conductor was simply altered to allow the shortest, and most direct, path possible to an earthing reference. The customer has not experienced any damage to the telephone equipment since the changes.

Figure 11-4—Excessive grounding conductor coil

Copyright © 2006 IEEE. All rights reserved.

11.5.4 Ground-fault circuit interrupter problems

Problem: Capacitor bank switching. An industrial facility, served from a wye-connected 12.5 kV service and grounded through a resistor, had two 3600 kvar capacitor banks for voltage regulation. Plant personnel complained that a feeder circuit breaker would trip periodically from a ground-fault relay. They would spend time inspecting the equipment downstream for ground fault, but could never find the cause. After considerable investigation, the problem was discovered to be caused by the capacitor bank. Transient overvoltages created from capacitor switching would sometimes be high enough to cause a TVSS device on the high side of one of the downstream transformers to operate. The power follow-through current through the TVSS device was enough to cause the ground relay to operate.

Solution. After checking for a defective relay, consulting the coordination study, and reviewing the settings, the easiest solution was to raise the current setting on the ground-fault relay, providing the increase does not render the relay useless. Another solution would be to increase the time delay.

11.5.5 Ground discontinuity

Problem 1: Lightning and insulated/isolated grounding (IG) systems. In an area experiencing several short lightning storms a day, erratic computer operation was occurring within a large office building. The grounding conductors of all the computers in the building were insulated from all other conductors, bused together at a single location, and then carried out of the building to a grounding electrode system. This IG electrode system consisted of six rods driven into the earth away from the building. Power quality monitor measurements indicated that voltages were being developed between the building grounding system and the isolated computer ground. A code analysis showed that the grounding configuration was in violation of the NEC, and was a definite safety hazard.

Solution. The computer manufacturer was persuaded to permit grounding of the computer system to the building grounding system, which had a concrete-encased grounding electrode. Immediately, the erratic operation of the computer system ceased, and the safety hazard was eliminated. It is important that all ground wires be routed with power conductors as specified by IEEE Std 142™-1991 [B1]. Routing the ground wires with the power conductors increases the reliability and reduces the impedance of the fault circuit.

Problem 2: Multiple grounds—electronics damaged due to lightning. A residential customer in the Southeast complained of repeated television and VCR damage. The local utility engineer investigated using a true rms multimeter. The voltage was found to be approximately 120 V on three different occasions.

The utility line crew investigated also. They found all connections on the transformer pole and at the service entrance to be correct and secure.

After coming to a dead end, the engineer called in the power quality engineering group. The customer said that in each case the damage was on the same day as a summer thunderstorm, which resulted in numerous lightning strikes in the area. Upon inspection of the site, it was found that the home was served by a local cable television system. There were surge protective devices (SPDs) installed by the customer after the first failure, but the problem persisted.

Solution. The power quality engineer found that there were two ground rods at the home. One was installed by the local electrical utility, and the other was installed at the opposite end of the home by the cable company. These two ground rods were not bonded together as required by Section 820-40 (b–d) of the NEC. The cable television conductor, and electrode if one exists, shall be bonded to the structure grounding electrode system or equivalent as stated in the referenced code sections. It was not.

Having two different, unbonded grounding electrodes sets up a potential difference that caused damage to sensitive electronic loads, which in this case was an entertainment system. When lightning occurred,

 Copyright © 2006 IEEE. All rights reserved.

potential differences developed between the ground electrodes. This potential difference appeared between the input ports of the entertainment system, resulting in damaged circuits (see Figure 11-5.)

By installing a good UL 1449-rated TVSS (see UL 1449-1996 [B3]) with both power and cable inputs being bonded together (for surge reference equalization) and having the cable company bond the two electrodes with 6 AWG copper or larger, the problem was solved.

Problem 3: Multiple buildings, common signal conductors. Four separate but nearby buildings contained the control for a series of chemical processes. Each building housed a computer for process control. There was some interconnection between data circuits of the computers in adjoining buildings. Each of the four computers was separately grounded to the structural steel grounding system of its building. Operation of the computer systems was erratic.

Solution. The responsible plant engineer chose to replace the interconnecting data lines with fiber-optic communication links. The optical fibers were buried in plastic conduits and the interface electronics in each building were grounded with their respective power grounding means.

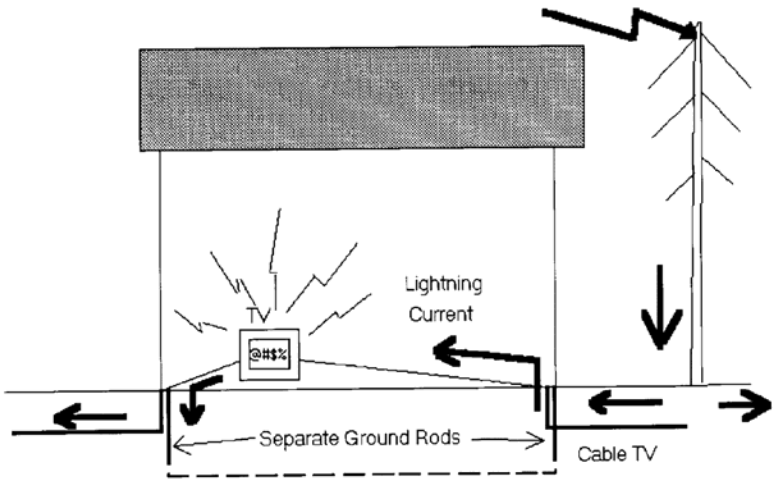

Figure 11-5—Lightning and ground rods

Problem 4: Computer graphics system—ground potential difference on the data lines. A computer-aided design/computer-aided manufacturing (CAD/CAM) graphics system, installed by a computer graphics vendor, links a central processing unit (CPU) to remote terminals in separate buildings. No direct lightning strikes were reported, yet extensive damage was done to the circuit boards on terminals and the CPU inputs. Power surges (transient voltage surges) were suspected and precautions were taken, but they did not help. Isolation transformers were installed, but again, did not help.

The data cables had been run in plastic underground conduit with only one end of the shield grounded and the other end left floating. High voltages were produced between the floating end and its local ground. The problem was not in the power line surges, but the differential ground potentials. The opto-isolators did not isolate the problem since local power transformers to the opto-isolators closed the loop.

Solution. The solution was to tie the floating end to ground through a TVSS device. This allowed short rise-time surges to be conducted to ground, without establishing a ground loop. A better solution would be to use a dual-shielded cable, its outer shield grounded at both ends and its inner shield grounded at one end, with a TVSS device (connected to ground) at the other end. If data integrity is an absolute requirement, metallic connections should be avoided for data links spanning remote terminals.

Copyright © 2006 IEEE. All rights reserved.

Problem 5: Computer-aided industrial control—ground potential differential on power lines (absence of ground window). A novel adaptive control system, using microprocessor-based sensors and phase control of power thyristors, had suffered system crashes and memory component damage on repeated occasions. Suspicions developed that there were some correlations between the crashes or damage and the operation of another developmental power system in an adjacent laboratory.

A review of the total power system revealed the existence of ground loops. On one side, the power supply for the computer and some signal processing circuits were obtained from the room outlets of the laboratory 120 V system, including the grounding conductor (green equipment safety conductor). On the other side, the power supply for the high-power circuit was obtained from a feeder coming directly from the building power center, including again a grounding conductor run alongside this power line. Everything was properly installed by electricians and bonded to the frame of the machine being controlled.

A double ground loop was formed—one between the grounding conductor of the 120 V room supply and the power-feed grounding conductor, and the other between the signal processing ground and the voltage probe with its separate ground reference.

During transient conditions involving the high-power feed to this system and the neighboring system, substantial current could flow between the two ground wires linked by the computer signal wiring.

Solution. An immediate cure was to open the surge ground current path (between the two systems) by inserting a shielded isolation transformer in the 120 V supply to the computer and bonding the secondary side of this transformer to the single-point ground (SPG) derived from the high-power feed (an NEC requirement). This correct application of an isolation transformer, to open a ground loop, is in contrast to the misconception that isolating transformers can eliminate line-to-line surges.

Clearly, the first ground loop was one of the major sources of the problem, which could have been avoided had the system been arranged with a ground window.

11.6 Transient voltage surge suppression network design—primary and secondary network design

Problem: Special case—severe surge environment. During the initial startup of a solid-state motor drive in a chemical processing plant, difficulties arose with the varistor and its protective fuse at the input of the thyristor circuits. Frequent blowing of the input power fuse was observed, with occasional failure of the varistor. The plant substation, fed at 23 kV from the local utility, included a large capacitor bank with one-third of the bank switched on and off to provide power factor and voltage regulation. These frequent switching operations were suspected of generating high-energy transients that might be the cause of the failure of the fuses and varistors, because literally thousands of similar drive systems had been installed in other locations without this difficulty. On-site measurements indicated that indeed the fuses and varistors were not matched to their environment.

Solution. Immediate relief was secured by the installation of a larger varistor at the same point in the circuit. Long-term protection was obtained by the addition of a gapless metal-oxide varistor (MOV) on the primary side of the step-down transformer feeding the drive.

This case history illustrates how SPDs that are successfully applied for the majority of cases can fail when exposed to exceptionally severe surge environments. It also shows how little attenuation occurs, at the frequencies produced by switching surges, between the distribution level (23 kV) and the utilization level (460 V) even though a long line and two step-down transformers exist between the source of the transient and the point of measurement.

 Copyright © 2006 IEEE. All rights reserved.

In addition to the proposed upgrading of protection at the 460 V level, three other remedies could be considered:

a) Installation of surge arresters at the intermediate voltage level (4160 V);
b) Installation of surge arresters at the 23 kV level; or
c) A change in the circuits involved in the capacitor switching, designed to reduce the severity of the transients at their origin.

(This solution can be considered site-specific, and the solution applies only to this problem at this site. Care should be exercised in applying this to other sites.)

11.7 Typical radiated EMI problems

Problem 1: Computer monitor with wavy screen distortion. A high-resolution computer monitor was experiencing a wavy/quivering screen distortion. Magnetic field measurements showed the 60 Hz field in the vicinity of the monitor was about one order of magnitude higher than elsewhere in the office. An inspection of the area revealed that a subpanel (magnetic field source) was located on the other side of the wall next to the monitor.

Solution. The user moved the monitor approximately 1.2 m (4 ft) away from the back of the subpanel, where the magnetic field strength was at a nondisturbing level.

Problem 2: Computer monitor with wavy screen distortion. High-resolution computer monitors were experiencing wavy/quivering screen distortions. The office, located in an old row house with a basement, used computers to generate advertising material. Magnetic field measurements showed the 60 Hz field in the vicinity of the monitor was about one order of magnitude higher than elsewhere in the office. An inspection of the basement area revealed a copper water pipe next to the basement ceiling, directly under the floor (magnetic field source).

The NEC requires the copper piping of the building to be connected to the identified conductor, commonly referred to as the *neutral*. The identified conductor is to be bonded to the grounded conductor at the service entrance per Section 250-104 of the NEC. One or more of the houses served from the transformer probably had a poor neutral connection. The neutral return current from some other location was flowing back over the water piping of the house containing the computers.

Solution. An insulating bushing was placed in the copper water pipeline near the point of the pipe exiting the house. The insulating bushing interrupted the flow of return current over the ceiling-mounted water pipe. This solution required the evaluation of the possibility of a voltage gradient between any outside water pipe spigot and the earth. This type of modification to the grounding system being performed, however, is not the preferred solution.

The preferred solution is to find the wiring error; however, this can be time consuming and costly. The problem is likely to be in the method the utilities use to supply electric power, using the messenger to serve also as the neutral and the grounding means. Since several locations may be served from the same transformer, it is likely that one of the other locations have a faulty messenger/neutral/ground connection resulting in the current flowing back over the problem location's messenger/neutral/ground conductor.

The installation of a neutral blocker in the service is another solution. The neutral blocker will force the current to flow over some other path. The final solution is to serve all locations with 4-wire, two- or three-phase conductors; an isolated, insulated neutral; and a ground/messenger conductor.

Problem 3: EMI—Patient wandering system. An assisted living facility installed a new patient wandering system (PWS) to notify personnel when a patient left the facility. The system worked using a combination of

Copyright © 2006 IEEE. All rights reserved.

a transmitter worn by patients, an antenna at each exit door, and magnetic switches at each exit door. A warning light was illuminated if a patient approached an exit door, followed by an alarm if the door was opened. Approximately 3 months after installation of the new PWS, the staff began to report malfunctions, including false alarms and at least one incident of a patient exiting the facility without an alarm.

Solution: A thunderstorm near the time of the first complaints led the facility to contact the manufacturer to determine if the PWS had been damaged by the storm. After the manufacturer determined that the system was not damaged, the facility contacted the local utility. Utility engineers suspected some form of EMI to be the cause. After failing to find a source of EMI outside of the facility, the utility brought in a power quality consultant. The consultant took measurements of both conducted and radiated emissions in the facility without locating the source of the offending signal. Working with the utility, the consultant located a source of EMI across the street from the facility. It was caused by a cracked hot-line clamp. The arcing across the crack was producing a signal at nearly the same frequency as the PWS. Replacing the failed clamp solved the problem.

11.8 Flicker

Problem 1: Light flicker caused by resistive spot welder. A manufacturer of condenser tubes for residential refrigerators installed a three-phase resistive spot welder to fasten the condensers to steel wire used for heat dissipation and structural support. In the first 2 weeks of operation, over 100 residential customers complained about flickering lamps. The utility, the manufacturer, and a power quality consultant analyzed five possible options to resolve the problem, as follows:

1) Stiffen the electrical system to reduce the level of the voltage fluctuations.
2) Change the welder configuration.
3) Reduce the size of the welder's service transformer.
4) Move the welder distribution feeder to a non-residential circuit.
5) Add adaptive VAR compensation at the factory.

The manufacturer needed to maximize the production of the welder. The utility wanted the voltage fluctuations, and the resulting lamp flicker, reduced to levels that were acceptable to their customers. Both wanted an economic solution.

Solution: Option 2 was determined to best meets the requirements of the manufacturer and the utility. The welder contained eight pairs of electrodes, with between one and four pairs operating at the same time. Originally, the welder was operating with two pairs of electrodes welding at the same time. A mechanical cam determined the timing of the welds and originally operated at 60 RPM. The operating characteristics of the welder were adjusted while the flicker levels were monitored at various points on the distribution system. The number of electrode pairs in operation at the same time was reduced to one, and the rotational speed of the cam was increased to over 100 RPM. This resulted in a change in the flicker, measured at the service entrance, from a short term perceptibility level (or PST) of 2.0 to a PST of 0.8. Most people cannot detect a flicker below PST 1.0. As an added advantage, the production of the welding machine was increased as well.

11.9 Typical electrical inspection problems

The incidents related are very brief. As far as the electrical inspector was concerned, these examples were open and shut cases of direct NEC violations. Because the inspector was familiar with the problems associated with incorrect installations of sensitive electronic equipment and NEC violations, all computer installations were closely inspected.

 Copyright © 2006 IEEE. All rights reserved.

Since it is not unusual for many sections of the NEC to be violated in the examples cited, and due to the fact that the NEC is revised and the section numbering may change, exact sections are not cited.

Problem 1: Automated cash register and checkout. A large food market had installed an automatic scanning checkout counter and cash register. The installation specifications called for each checkout counter installation to be isolated from all other building grounds. Under each checkout counter, a separate (isolated) ground rod was to be driven and used for the equipment ground for that counter.

Each checkout counter had a motor driving a conveyor. This motor was to have its ground removed and connected to the ground rod under the counter. Should a fault occur in the motor winding, which is very likely, a high-impedance ground loop would exist and prevent the protective device from operating. The failure of the protective device to operate would place potential on the checkout counter, presenting a shock and fire hazard.

Not only was this unsafe, but the NEC requires all equipment and enclosures to be connected to the same "common grounding electrode." Also, the NEC requires a "sufficiently low impedance to facilitate the operation of the circuit protective devices in the circuit."

Solution. The inspector did not issue an occupancy permit until all the IGs were interconnected.

Problem 2: Insulated-ground receptacle. A new ten-floor office building had installed, from the basement to the top floor, a 1/4 in · 1 in copper bus bar. The bus bar was insulated. Isolated, insulated-ground receptacles were to be used for the computer installation. The receptacle ground terminal was to be connected to this bus bar. The bus bar was connected to a ground rod, which was driven through the basement floor. The object of this misguided design was to offer ground isolation from any other ground system within the building.

The NEC allows "a receptacle in which the grounding terminal is purposely insulated from the receptacle mounting means" to reduce electrical noise, and electromagnetic interference (EMI). However, "the receptacle grounding terminal shall be grounded by an insulated EGC run with the circuit conductors. This grounding conductor shall be permitted to pass through one or more panelboards without connection to the panelboard grounding terminal … so as to terminate directly at an EGC terminal of the applicable derived system or service."

Solution. An impasse developed and the building remained unoccupied until the isolated, insulated-ground receptacles were rewired according to the NEC.

11.10 Typical life-safety system problems

Problem: False alarms on smoke/fire detector system. A large office/data processing facility was experiencing numerous false alarms on the smoke/fire detection system. It was determined that the cause of the false alarms emanated from a local smoke detection panel in a computer room. Further investigation revealed that room temperature thermostats were connected to the local panel and used as a local alarm. When the computer room temperature exceeded 25 °C, the local panel went into alarm, causing the main building panel to go to an alarm status with all the fire bells sounding throughout the facility.

Solution. The computer room thermostats were removed from the smoke detection panel. A separate panel was constructed to monitor and control the environmental system. The local smoke detection panel was modified to a multizone configuration, with two separate alarm inputs required before an output alarm was sent to the main building fire-alarm panel.

Copyright © 2006 IEEE. All rights reserved.

11.11 Typical misapplication of equipment problems

Problem: Ambient temperature. An energy management company was experiencing damage to microprocessors within their energy management system. SPDs were also damaged. Monitoring with a power disturbance analyzer did not reveal any electrical disturbances that could cause equipment failure. It was determined from reviewing the equipment specifications that the ambient temperature was too high for proper operation.

Solution. An improvement in ventilation level allowed the equipment to operate successfully.

11.12 Normative references

The following referenced documents are indispensable for the application of this recommended practice. For dated references, only the edition cited applies. For undated references, the latest edition of the referenced document (including any amendments or corrigenda) applies.

ANSI C84.1, American National Standard for Electric Power Systems and Equipment—Voltage Ratings (60 Hz).[3]

NFPA 70, 2005 Edition, National Electrical Code® (NEC®).[4]

11.13 Bibliography

Additional information may be found in the following sources:

[B1] IEEE Std 142-1991, IEEE Recommended Practice for Grounding of Industrial and Commercial Power Systems (*IEEE Green Book*).[5, 6]

[B2] IEEE Std 519-1992, IEEE Recommended Practices and Requirements for Harmonic Control in Electric Power Systems.

[B3] UL 1449-1996, Safety for Transient Voltage Surge Suppressors.[7]

[3]ANSI publications are available from the Sales Department, American National Standards Institute, 25 West 43rd Street, 4th Floor, New York, NY 10036, USA (http://www.ansi.org/).

[4]The NEC is published by the National Fire Protection Association, Batterymarch Park, Quincy, MA 02269, USA (http://www.nfpa.org). Copies are also available from the Institute of Electrical and Electronics Engineers, Inc., 445 Hoes Lane, Piscataway, NJ 08854, USA (http://standards.ieee.org/).

[5]IEEE publications are available from the Institute of Electrical and Electronics Engineers, Inc., 445 Hoes Lane, Piscataway, NJ 08854, USA (http://standards.ieee.org/).

[6]The IEEE standards or products referred to in this subclause are trademarks of the Institute of Electrical and Electronics Engineers, Inc.

[7]UL standards are available from Global Engineering Documents, 15 Inverness Way East, Englewood, CO 80112, USA (http://global.ihs.com/).

 Copyright © 2006 IEEE. All rights reserved.

Index

A

AC and DC power
convergence, 496
differences in tradition, 500
efficiency of conversion and distribution, 503
generators and batteries, 500
reliability of equipment, 501
selecting systems, 498
traditional ITE and telecommunications, 498
UPS
fault tolerance, 502
functionality, 501
maintainability, 502
AC power distribution
dual-cord loads, 332
large scale arrangements, 326
mixed single and dual-cord loads, 330
networks, 326–333
single-cord loads, 328
stand-alone units, 325
AC power filter capacitor noise, 492
AC power systems
grounding and bonding, 383
SPDs, 384
AC rms voltage, 173
AC voltmeters
average responding rms, 167
peak responding, 167
Acronyms, 14
Alternate/standby power, 261
generator systems, 261
transfer switch, 262
ANSI (American National Standards Institute), 439–441
ANSI T1.311 requirements for dc grounding, 505
ANSI T1.311 requirements for dc power systems, 504
ASD (adjustable-speed drive), 26, 71
ATIS (Alliance for Telecommunications Industry Solutions), 439–441
Atmospheric charge redistribution, 69

B

Bandwidth, 177
Batteries, 227–228
float voltage, 228
maintenance-free, 227
sealed valve-regulated, 227
telecom and ITE, 500
wet-cell, 227
Battery return conductor, definition of, 5
Bellcore. *See* Telcordia Technologies
BICSI (Building Industry Consulting Services International), 442
BN (bonding network), 389
Bond reactance, 126
Bonding
definition of, 5
equipment bonding networks, 402
intersystem, 378
multipoint topologies, 390
single-point topologies, 390–391
Bonding networks
common (CBN), definition of, 5
isolated (IBN), definition of, 5
Broadband grounding systems, 139
Busways, 273

C

Cable trays, 277
Cabling
buried, 76
coaxial, 418
noise coupling into, 418
riser and feeder, grounding, 387
ScTP (screened twisted pair), 418
separation, 418
signal, 417
UTP (unshielded twisted pair), 418
waveguide and coaxial, and SPDs, 420
Capacitively coupled mechanism, 71
Case histories
automated offices, 565
capacitors, load interaction, 566
electrical inspection, 574
electronic loads, 564–566
feeder and branch circuit level miswiring, 567
flicker, 574
ground discontinuity, 570–572
ground-fault circuit interrupter, 570
life-safety system, 575
misapplication of equipment, 576
premises switching generated surges, 563
premises, wiring, 566–572
radiated EMI, 573
receptacle level miswiring, 567–569
service, 566
TVSS network design, 572
UPS
unfiltered input, 564
unfiltered output, 565

Copyright © 2006 IEEE. All rights reserved.

Case histories *(continued)*
utility-sourced problems, 561–563
voltage sags, 561
voltage surges, 562
CBEMA curve, 40–44
Circuits
analysis theory, 102
overvoltage protection, 506
Commercial or industrial locations
proximity, end of power line, 483
proximity, power station or substation, 483
Commercial power, definition of, 6
Common bonding network (CBN), 403
definition of, 6
Common-mode noise, 490
definition of, 6
Computer PDUs, 219
Conducting a site survey, 183
ac current monitoring, 198
EMI and RFI, 201
equipment environment, 200
ESD, 201
harmonic measurement
instruments, 202
location, 202
techniques, 202
IEEE 519 compliance, 202
monitoring sense lead connections, 197
monitors
connections, 195
grounding, 197
input power, 197
location and duration, 199
placement, 197
thresholds, 198
quality of ac voltage and current, 195
detection of disturbances, 195
wiring and grounding system
condition, 184
continuity of grounds, 188
EGC impedance, 186
grounding electrode resistance, 187
high-frequency grounding, 188
neutral conductor impedance, 186
neutral conductor sizing, 186
neutral-ground bond, 185
safety, 185
transformer sizing, 186
two-point bonding testing, 188
Conductors, 271
equipment grounding, 272
grounding and bonding
CBN and IBN, 412
overview, 413
length restrictions, 128
minimizing inductance, 127
neutral, 272
phase, 272
resistance, 126
self-resonance effects, 126
Conduit
electrical metallic tubing, 274
fittings, 275
flexible metal, 275
rigid and intermediate metal, 274
supports, 275
Contact resistance, 126
Coordinating involved parties, 182
electric utility company, 183
electrical contractor or facility electrician, 183
equipment manufacturer/supplier, 182
equipment user or owner, 182
independent consultant, 182
Coupling
capacitive (electrostatic), 75
definition of, 6
far-field (electromagnetic), 75
free-space, 72
inductive (magnetic), 72
mechanisms, 71
Crest factor, 169
definition of, 6
Critical load, definition of, 6
Current measurements, 167
crest factor, 169
current-transformer ammeters, 167
dc component on ac current, 168
direct-reading ammeters, 168
Hall-effect ammeters, 167
inrush and start-up current values, 168
overview, 168
steady-state values, 168
Current-transformer ammeters, 167
Customer premises equipment (CPE), definition of, 6

D

Data-processing equipment malfunction, 30
DC bus voltage detectors, 71
DC equipment grounding conductor (DCEG), definition of, 6
DC leakage current, 494
DC power distribution
design, 354–357
distributed electronic equipment, 340
Ethernet devices, 337
large-scale components and arrangements, 343

 Copyright © 2006 IEEE. All rights reserved.

multiple racks, 342
PoE (Power over Ethernet), 337
selection and coordination, 352–354
single rack, 341
sizing power for Ethernet, 340
sourcing configurations, 337
telecommunications terminals, 333–336
DC power plant
centralized, 345–352
DC power sources, influence from, 487
DC power systems
CDCPS, 394
complicating factors, 401
grounding topologies, 394
ITE ground planes, 400
ITE Return isolated (insulated)—dc-I, 397
ITE Return multipoint grounded—dc-C, 398
recommended practice, 399
Return isolated (insulated)—dc-I, 395, 396
Return multipoint grounded—dc-C, 396
DC system grounding conductor (DCG), definition of, 6
Definitions, listing of, 5–13
Design philosophies, conflicting, 23
Differential-mode noise, definition of, 6
Direct-reading ammeters, 168
definition of, 6
Displacement power factor, definition of, 6
Distortion, 81
Distortion factor, definition of, 6
Distributed computing (and controls), 478
Distributed redundant UPS, 231
Disturbances
classification of, 23
detection of, 195
digital circuit data upset, 62
fault currents, 60
frequency variations and slew rate, 62
inrush currents, 60
origin of, 24
overview, 54
potential impacts, 61
power, 482
power monitoring, 200
prediction of upset and damage, 26
sources/characteristics, 58
step loads, 59
subtractive, 56–62
surge effects, 29–30
surge, expectation of, 26–28
transient, 54
voltage sag, 25
voltage variances, short term, 61
Dropout, definition of, 6
DSL (digital subscriber line), 511
Dynamic response, 240

E

Earth ground resistance testers, 169
Efficiency, definition of, 6
Electrical metallic tubing (EMT), 274
Electrical noise, definition of, 7
Electronic equipment environment, 200–201
EMI and RFI, 201
ESD, 201
temperature/humidity, 200
EMF (electromotive force)
image distortion, 488
EMI (electromagnetic interference)
ESD and RFI, 491
industry practices and methods, 491
ITE equipment, on, 491
potential impact, 77–79
server installations, 492
EMI, potential impact, 77
Type-I, signal-data disruption, 77
Type-II, gradual failures, 79
Type-III, immediate hardware destruction, 79
EMI/EMC areas
electrical safety requirements, 47
shielded, filtered, enclosed, 46
Engineering studies, 260
harmonic currents and voltages, 260
steady-state and transient voltage, 261
Equipment
compliance to specification requirements, 202
factory testing, 246–248
installation, 236–237
large system, influence of, 493
microelectronic, 22
power electronic, 21
procurement specifications, 243
protection of susceptible, 38
selection and installation, 262–279
dry-type transformer, 263
Equipment grounding, 289–293
insulated, 290–293
ground bus, 292
identification, 293
routing, 293
overview, 289
standard configuration, 290
Equipment grounding conductor (EGC), definition of, 7

Copyright © 2006 IEEE. All rights reserved.

Equipment maintenance, 248
component wear and aging, 249
preventative, 248
restoring after failure, 249
Equipment procurement specifications, 243
"mixed" vendor, 245
conflicts with standard products, 244
creative, 244
increased liability, 245
long-term maintenance, 245
multiple vendor, 245
safety listings, 245
unknown characteristics, 244
vendor-supplied, 244
Equipment room
recommended practice
NFPA 75, 254
UL 1950, 254
wiring and grounding, 254
Equipment specifications, 236
installation, 236–237
load compatibility, 238–241
size and weight, 236
system load rating, 236
utility interface, 237–238
Equipment verification testing
factory, 246–248
site acceptance, 248
solution verification, 248
visual inspection, 246
ESD (electrostatic discharge)
localized, 70–71
ETSI (European Telecommunications Standards Institute), 442–444
Evaluations and audits
overview, 421
power interruption testing, 422
powering, grounding, and protection, 422
qualifications for conducting, 421
scheduling, 421
site survey, 422
Event indicators, 171
data capture, 172
recording and reporting, 172

F

Failure mode, definition of, 7
Filters
harmonic-current, 211
noise, 211
Flexible metal conduit (FMC), 274
Flicker, definition of, 7
Flywheels, 228
Form factor, definition of, 7
Forward transfer impedance, 107–108
definition of, 7
Fourier analysis, 81
Frequency, 62, 173
analysis technique, 98
basic current loop, 99
performance range, 104
power/safety range, 103
regimes defined, 98
selecting circuit theory, 102
small and large circuits defined, 100
Fuel cells, 232
alkaline, 232
molten carbonate, 232
PEM (proton exchange membrane), 232
phosphoric acid, 232
solid oxide, 232
Fuses, 271

G

GDT (gas discharge tube), 156
Generators
telecom and IT, 500
GPR (ground potential rise)
codes and standards, 487
exposure, 486
overview, 485–486
Ground circuit impedance testers, 169
Ground electrode
concrete-encased, definition of, 7
definition of, 7
Ufer ground, 7
Ground impedance tester, definition of, 7
Ground loops, 387, 488
definition of, 7
Ground mapping, 135–137
Ground noise
intersystem ITE, 488–490
Ground plane
adjacent panels, 539
machine structure, 539
overview, 538
Ground window, definition of, 7
Ground, definition of, 7
Ground, radial, definition of, 7
Grounding, 279–300
coaxial cabling, 418
installation scenarios, 34–37
insulated vs. isolated, 130
interconnections and interactions, 517
ITE, 46
mapping, 135

 Copyright © 2006 IEEE. All rights reserved.

metallic links between buildings, 420
network vs. station, 419
network/station, effect on lightning, 419
noise coupling into cabling, 418
outside plant, to mitigate ac induction, 420
overview, 53
power system equipment, 279–300
radio base stations equipment, 420
safety, 33
satellite dish systems, 420
ScTP cabling, 418
separation between cables, 418
signal cabling, 417
single-point, 130
stray currents and voltages, 36
surge protection, 516
susceptible electronic equipment, 415
system, 281
TREE configuration, 134
UPS, 282
UTP cabling, 418
violations of topologies, 495
waveguide, coaxial cable, and SPDs, 420
Grounding and bonding
ac power systems, 383
SPDs, 384
ACEG (the green wire), 388
approved grounds, 373
building perimeters, 381
conductors
CBN and IBN, 412
overview, 413
equipment and apparatus, 378
equipment topologies, 388–394
establishing a ground ring, 375
exposed cabling, 384
importance of, 376
industry standards, 374, 376–378
infrastructure, 380–383
LPS, 379
overview, 370–375
riser and feeder cables, 387
telecommunications role, 372
work areas, headset users, 414
Grounding electrode system, 280
Grounding for compatibility
electromagnetic, 416
EMC, 417
network, 417
via CBN, 417
Grounding subsystems, 121–150
conductor self-resonance effects, 126
earth electrode, 122–124
fault/personnel protection, 129
length restrictions on conductors, 128
lightning protection, 149
minimizing inductance, 127
overview, 124
Grounding, high-frequency
configuration, 294
connection to SRG, 299
flat strip SRG, 297
sheet metal covering, 294
single-point and multipoint, 298
SRG
connection, 299
flat strip, 297
installation, 299–300
raised flooring understructure, 298
round-wire, 297
SRS for noncontiguous areas, 299

H

Hall-effect ammeters, 167
Harmonic current
filters, 211
active, 214
passive, 212
transformer heating due to, 91–93
Harmonic current and voltage measurements
equipment compliance, 202
IEEE 519 compliance, 202
instruments, 202
location, 202
premises wiring overloads, 202
techniques, 202
transformer overheating, 202
Harmonic current reduction
delta-wye isolation transformers, 213
phase-shifting, multi-winding transformers, 213
transformer-based, 213
zero-sequence transformers, 213
zigzag autotransformers, 213
Harmonic distortion, definition of, 7
Harmonic measurements, 175
instruments, 202
location, 202
techniques, 202
Heat losses due to voltage source, 96

I

IBN (isolated bonding network), 389, 406–413
grounding
compatibility, CBN, 409
metallic links, 411
recommended practices, 407

Copyright © 2006 IEEE. All rights reserved.

IEC (International Electrotechnical Commission), 444–449
IEEE (Institute of Electrical and Electronics Engineers), 449–454
IEEE 519 compliance, 202
IG (insulated ground), 130
IGR (insulated grounding receptacle), 130
Impedance, 103
    ac distribution system, 113
    forward transfer, 107
    internal, 105
    interwinding electrostatic shielding, 109
    linear loads, 115–116
    nonlinear loads, 114
    output, 109
    performance range, 104
    power source dynamic, 104
    power system, 104
Impulse, definition of, 8
Input power factor, definition of, 8
Input voltage range, definition of, 8
Inrush, definition of, 8
Instrumentation
    average responding rms voltmeters, 167
    calibration verification, 178
    circuit tracers, 176
    crest factor, 169
    current measurements, 167
    data collection techniques, 175
    direct-reading ammeters, 168
    Hall-effect ammeters, 167
    harmonic measurements, 175
    oscilloscope measurements, 170
    peak responding voltmeters, 167
    power line monitors, 170
        analysis functions, 172
        event indicators, 171
        text, 172
    range of available, 163
    recommended, 163
    site survey tools, 169–176
    steady-state power analyzers, 174
        analysis functions, 175
        data capture, 175
        recording and reporting mechanisms, 175
    text monitors, 172
        analysis functions, 173
        data capture techniques, 172
        recording and reporting, 173
    true rms voltmeters, 166
    voltage measurements, 166–169
    waveform analyzers, 173
        analysis functions, 174
        data capture, 174
        recording and reporting, 174
Insulated grounding receptacle (IGR), definition of, 8
Insulation breakdown or sparkover, 30
Intermediate metal conduit (IMC), 274
Internal impedance, 105–107
Internal POTS and data lines, 512
Internet
    co-location with IT equipment, scenarios, 478
    end-user, 478
    links via telecommunications, 477
    overview, 477
Interruption
    definition of, 8
    momentary, definition of, 8
Interwinding electrostatic shielding, 109
Inverter type UPS, 227
Isolated bonding network, definition of, 8
Isolated ground, 130
Isolated grounding receptacle, 130
Isolated redundant UPS, 229
Isolation transformers, 540
Isolation, definition of, 9
IT (information technology)
    adaptable rack enclosures, 474
    advancements of distributed systems, 473
    department functions, 469
    effect of network transformation, 470
    equipment, 477
    product deployment, 469
    raised floor concept, 469
    single enclosed units, 474
    wire-line and wireless, 470
ITE (information technology equipment)
    CBEMA curve, 40–44
    grounding, 46
    intersystem ground noise, 488–490
    powering, 40
ITI (Information Technology Industry Council), 454
ITU (International Telecommunications Union), 454–459

K

K-factor rating, 93–96

L

Light bulb failure, 30
Lightning
    exposure, 480
    outside plant exposure, 481
    risk assessment, 482
    strike damage, 29

 Copyright © 2006 IEEE. All rights reserved.

Lightning/surge protection
electronic equipment, 302
exterior building systems, 304
installation, 301
overview, 300
premises electrical system, 302
selection, 301
service entrance, 301
SRE, 302
UPS, 302
Lightning-induced surges, 67–69
Line decoupler and voltage measurements, 170
Line interactive UPS, 226
Linear load, definition of, 9
Load compatibility
automatic forward and reverse transfer, 241
dynamic response, 240
load isolation, 240
output voltage
distortion, 239
regulation, 239
overload capacity and duration, 240
power capacity, 238
transfer time, 240
unbalanced load regulation, 239
Load impedance, 114
LPS (lightning protection system)
overview, 482
subsystem, 149

M

Magnetic field strength, around a conductor, 73–75
Magnetic synthesizers, 220
Magnetically coupled mechanism, 71
Maintenance bypass, 229
Materials, dissimilar, 126
MCBN (mesh common bonding network), 389, 404
Measurement
bandwidth, 177
equipment, 176
instrument calibration, 178
resolution, 177
sampling rate, 177
true rms, 177
Metal-clad cable, 276
M-G (motor-alternator/generator), 220–222
Momentary interruption, definition of, 9
MOV (metal-oxide varistor), 155
Multiple earth ground references, 188
Multi-stage SPD, 157

N

NEC (National Electrical Code), 48
NEMA (National Electrical Manufacturers Association), 49
NFPA (National Fire Protection Association), 459–461
NFPA 780 Annex I
highlights, 380
NIST (National Institute of Standards and Technology), 49
Noise
audible, 237
cabinets, 538
common-mode
and normal-mode, 530
definition of, 9
component segregation, 542–552
conductor segregation, 544
control
analysis, 536
overview, 529
control power transformer, 541
differential, 530
differential-mode, definition of, 9
drives, 550
electric and magnetic fields, 531
electrical, definition of, 9
field coupling, 532
filtering, 552–559
filters, 211
ground plane, 538
grounding, 537
isolation transformer, 540
longitudinal, 530
normal-mode, definition of, 9
recommended practices, 537–559
shielded cables, 548–550
shielding, 533–536
transverse-mode, definition of, 9
within panels, 546–548
Noise filters, 211
Nonlinear load
current, definition of, 9
definition of, 9
Normal-mode noise, definition of, 9
Notch, definition of, 9

O

OSHA (Occupational Safety and Health Administration), 49
NRTL (Nationally Recognized Testing Laboratory), 49

Copyright © 2006 IEEE. All rights reserved.

OSP (outside plant)
exposed communications circuits, 483–485
power fault and contact, 485
Output (reverse transfer) impedance, 109
definition of, 10
Overheating and fusing point, 126
Overvoltage, definition of, 10

P

Parallel redundant UPS, 230
Passive harmonic current filters, 212
Pathway, definition of, 10
Peak responding voltmeters, 167
Performance range, 104
Performance specification, 245
Phase shift
definition of, 10
effects, 97
Power conditioners
cost of operation, 241
air conditioning, 241
efficiency, 241
maintenance, 241
reliability, 241
reliability, 242
field data, 242
manufacturer's experience, 243
mean time between failures, 242
product, 242
Power conversion equipment nuisance trip, 30
Power correction devices
commonly used, 207–209
computer PDUs, 219
harmonic current, 211–214
isolation transformers, 210
magnetic synthesizer, 220
M-G, 220
noise filters, 211
power line conditioners, 218
standby power supply, 222
STS, 222
surge suppressors, 214
UPS, 224
voltage regulators, 215–218
Power disturbance
definition of, 10
monitor, definition of, 10
Power enhancement devices, 278
Power factor
corrected, 482
displacement, definition of, 10
total, definition of, 10
Power line conditioners, 218
Power line monitors, 170–175
event indicators, 171
steady-state analyzers, 174
waveform analyzers, 173
Power monitoring
ac current monitoring, 198
connections, 195
grounding, 197
input power, 197
location and duration, 199
long-term, 203
monitor placement, 197
recorded voltage disturbances, 200
sense lead connections, 197
thresholds, 198
Power products, medium voltage, 232–235
DSC, 235
DVR, 235
SSB, 233
SSTS, 234
Power protection
facility-wide, 432
integrated, 432
Power quality
definition of, 10
engineering approximations, 54
major issues, 53
measurement, 30
power surges, 30
survey data, 31–33
use of term, 22
Power system
arrangement, 256–260
branch circuit, 259
dedicated circuits, 259
feeder circuits, 258
in-building distribution, 257
service entrance, 256
location, 257
shared circuits, 260
three-phase vs. single-phase, 257
design/installation
equipment room, 254
overview, 253
safety, 254
Power system equipment
busways, 273
cable tray systems, 277
circuit breakers, 269–270
interrupting ratings, 270
trip units, 270
conductors, 271–272
equipment grounding, 272
neutral, 272

 Copyright © 2006 IEEE. All rights reserved.

phase, 272
enhancement devices, 278
fuses, 271
blown, 271
interrupting ratings, 271
safety switches, 271
grounding, 279–300
electrode, 280
metal underground water pipe, 281
lightning/surge protection, 300
exterior building systems, 304
installation, 301
premises, 302
selection, 301
service entrance, 301
UPS, 302
metal-clad cable, 276–277
pull and junction boxes, 276
raceways, 274–276
conduit
fittings, 275
flexible metal, 275
metal, rigid, intermediate, 274
supports, 275
metallic tubing, 274
selection and installation, 262
SRE, 302
switchboards and panelboards, 267–269
grounding, 269
location, 267
neutral bus, 268
overcurrent protective devices, 268
SPD, 269
transformer, dry-type
conventional vs. K-factor rated, 266
derating, 266
electrostatic shield, 265
grounding, 264
impedance, 264
K-factor rating, 265
location, 263
temperature sensor, 265
wiring methods, 263
wiring devices, 273
single-phase, 273
three-phase, 273
Power system selection
380 Hz to 480 Hz, 304–307
component derating, 306
conductor ampacity, 306
controlling wiring losses, 305
grounding and shielding, 304
line-drop compensators, 306
recommended location, 304
alternate/standby requirements, 261
branch circuits, 259
engineering studies, 260–261
feeder circuits, 258
overview, 255
types, 256
voltage, 255
Powering, grounding, and protection
design, application, and testing, 430–432
factors affecting, 428
significant and unique problems, 433
standards and practices, 427, 475
trends, 429
Preventive maintenance, 248
Primary protectors
grounding SPDs, 385
location vs. grounding, 386
overview, 517
technologies, 367
Product safety categories, 317
approved, 317
certified, 317
listed, 317
recognized, 317
tested, 317
Protection
ac testing, 509
classification, 506
coordination, 510
equipment testing standards, 508
lightning impulse testing, 509
noise, 38
overcurrent, 507
and overvoltage circuits, 508
sag, 39
surge, 39
susceptible equipment, 38
system coordination, grounding and bonding, 510
Protection device operating transient, 493
Pull boxes and junction boxes, 276

R

RAA (restricted access area), 432–433
Radial ground, definition of, 10
Radiated, 71
Receptacle circuit testers, 169
Recovery time, definition of, 10
Regulators, voltage, 215
Resolution, 177
Resonance, 116
ac system, 116
feeders and branch circuits, 120

Copyright © 2006 IEEE. All rights reserved.

Resonance *(continued)*
parallel, 118–120
series, 117
Resonant frequency, 116
Ride-through standards, 45–46
Rigid metal conduit (RMC), 274
Riser and feeder cables, grounding, 387
RMS voltmeters, average responding, 167
Rotary UPS, 224

S

SAD (silicone avalanche diode), 155
Safety ground, definition of, 11
Safety systems, 47
design/installation, 254
Sag, definition of, 11
Sampling rate, 177
SCBN (sparse common bonding network), 404
Semiconductor device damage, 30
Shield, definition of, 11
Shielded cables, noise, 548–550
Shielding
concepts, 150
definition of, 11
electromagnetic, 152
electrostatic, 150
grounded at both ends, 152
grounded at one end, 153
grounding, 152
noise, 533–536
SIBN (star isolated bonding network), 391
Signal reference grid. *See* SRG
Signal reference plane. *See* SRP
Signal reference structure. *See* SRS, 137
Single-point connection (SPC), definition of, 12
Single-point connection bar, definition of, 11
Single-point connection window (SPCW), definition of, 11
Single-point grounding. *See* SPG
Site survey tools, 169
circuit tracers, 176
data collection, 175
data collection techniques
analysis, 176
reporting, 176
EMI, 176
ESD, 176
infrared detector, 169
measurement, 176
oscilloscope measurements, 170
current transducer, 170
line decoupler and voltage, 170
receptacle circuit testers, 169
temperature and relative humidity, 176
testers
earth ground resistance, 169
ground circuit impedance, 169
Site surveys and analyses
applying data, 202
conducting, 183–185
coordinating involved parties, 182
electric utility company, 183
electrical contractor or facility electrician, 183
equipment manufacturer/supplier, 182
equipment user or owner, 182
independent consultant, 182
cost-effective solutions, 202
equipment malfunctions, 200
harmonic current and voltage measurements, 201
long-term power monitoring, 203
monitors, 195–200
overview, 181
performance, 188–189
safety, 185–188
sample verification forms, 190–194
verification procedures, 189
Skin effect, 126
Slew rate, definition of, 12
Spark gaps, air or carbon, 156
SPD (surge protective device)
air or carbon spark gaps, 156
clamping voltage, 525
damage caused by, 521
definition of, 12
design, 523
failure, 30
functionality, 519
GDT, 156
grounding of ac power systems, 384
hybrid, 155
industry standards, 359–360
MOV, 155
multi-stage, 157
parallel or shunt, 524
preventable damage, 521
purpose, 519
purpose and operation, 154
SAD, 155
selection, 522
series or in-line, 524
technology, 155, 523
topology and mounting, 524
SPG (single-point grounding), 130–134
SRE (surge reference equalizer), 302–304

 Copyright © 2006 IEEE. All rights reserved.

SRG (signal reference grid), 145–147
installation, recommended practices, 299
SRP (signal reference plane), 142–145
SRS (signal reference structure), 137–142
attachment to earth electrode, 149
definition of, 11
equipotential plane, as, 141
frequency requirements, 139
spatial capacitor, as, 148
Standards
codes and agencies, coordination, 48
industry, 427
international, 49
Standby power supply, 222
Static transfer switch. *See* STS
Static UPS, 225
Steady-state distortions
potential impacts, 87
voltage/current wave shape, 81
Steady-state power analyzers, 174
Step load changes, 59
STS (static transfer switch), 222
Subcycle voltage waveform variances, 97
Super isolation transformer, 210
Superconducting magnets, 228
Surge (transient) voltage, 173
Surge protection, 39
ac power, 517
clamping voltage, 525
device surge rating, 524
different systems interaction, 516
exposure
categories, 527
levels, 527
sources, 526
grounding, 516
interconnections and interactions, 517
immunity and withstand, 515
let-through voltage, 525
lightning threat scenarios, 514–515
location categories, 514
overview, 514
parallel or shunt devices, 524
performance, 518
power to location, 516
preventable damage, 521
primary protector, 517
protective earth, 516
series or in-line devices, 524
SPD
definition of, 12
design, 523
effect of proliferation, 515
functionality, 519
purpose, 519
selection, 522
series, 520
technology, 523
topology and mounting, 524
system withstand ratings, 524
testing, 525
Surge protective device. *See* SPD
Surge reference equalizer. *See* SRE
Surge suppressors, 214–215
definition of, 12
lightning-surge arrestors, 214
TVSS, 214
Surge voltage frequency, 79
Surges
classification, 481
definition of, 12
environmentally induced, 67
lightning induced, 67–69
overview, 480
Swell, definition of, 12
Switchboards and panelboards, 267
Switching surges, 63–66
System grounding, 281
System load rating, 236
System voltage, 255

T

Telcordia Technologies, 461–463
Telecommunications equipment
ac powering, 321
coaxial cable, 366
compliance
general, 316
global, 318
dc powering, 323
environmental exposure, 316
factors affecting SPDs, 361
industry guidelines, 316
LAN, 364
metallic links, 388
nonessential power, 324
power distribution, 325
primary protectors, 367
location, 386
product safety categories, 317
protected and back-up power, 324
RFI filters, 363
risk assessment, 362
SPD, 359, 385
determining the need for, 361
temporary wiring, 358
twisted pair, 365

Copyright © 2006 IEEE. All rights reserved.

Telecommunications equipment *(continued)*
vulnerability vs. immunity, 314–315
Telecommunications equipment room (TER), definition of, 12
Telecommunications, definition of, 12
Telecommunications, IT (information technology), and distributed computing
overview, 311–313, 320
recommended practices, establishing, 318–320
Telephone/telecommunications, 475–476
Terminology
building, adherence to, 436
distributed computing, 437
function, description by, 437
Internet, 437
IT (information technology), 437
overview, 436
product safety approval, 438
recommended, 394
standards-based, 436
Text monitors, 172
TIA (Telecommunications Industry Association), 463–464
Time of occurrence, 173
Total harmonic distortion (THD), 173
definition of, 12
Total power factor, definition of, 12
Transfer time, definition of, 12
Transformers, 91–97
add-on filter components, 111
constant voltage, 218
control power, 541
conventional, 266
delta-wye isolation, 213
derating conventional, 93
dry-type, 263–267
ferroresonant, 218
forward transfer impedance, 107
harmonic canceling, 96
heating, 91
interwinding electrostatic shielding, 109
isolation, 210, 540
K-factor rated, 94, 265
vs. conventional, 266
output impedance, 109
overheating, 202
phase-shifting, multi-winding, 213
rotating, 221
super isolation, 210
ultra isolation, 210
zero-sequence, 213
zigzag, 213
Transformers, dry-type, 263–267
Transient suppressors, 39
Transient voltage surge suppressor (TVSS), definition of, 13
Transient, definition of, 13
Transmission path losses, 79
Transverse-mode noise, definition of, 13
TREE configuration grounding, 134
Trip units, 270
Triplen harmonics, 88
True rms, 177
True rms voltmeters, 166
sampling devices, 166
square-law type, 166
thermocouple type, 166
TVSS. *See* transient voltage surge suppressor, 13

U

UL (Underwriters Laboratories), 48, 464–468
telecommunications standards, 366
Ultra isolation transformer, 210
Ultra-capacitors, 228
Undervoltage, definition of, 13
UPS (uninterruptible power supply), 224–232
availability, 500
batteries, 227
concurrent maintenance, 502
distributed redundant, 231
dual bus
system, 231
dual-bus
compatibility, 502
electrical infrastructure design, 501
electrical isolation, 501
energy storage, 227
generator compatibility, 501
grounding schemes, 282–289
internal fault tolerance, 502
inverter types, 227
isolated redundant, 229
maintenance bypass, 229, 502
parallel redundant, 230
protection against disturbances, 501
rectifier types, 226
rotary, 224
single points of failure, 502
single vs. dual input, 502
static, 225
system configurations, 228
Utility interface, 237
input current distortion, 238
input power factor, 238
input voltage range, 237
inrush current, 238
transient voltage withstand, 237

 Copyright © 2006 IEEE. All rights reserved.

V

Valve-regulated arresters, 155
Velocity of propagation, 100
Verification tests
    ac input failure and return, 247
    efficiency, 247
    factory, 246
    full load performance, 247
    harmonic input current, 248
    load, 247
        imbalance, 247
    overload capability, 248
    site acceptance, 248
    solution verification, 248
    synchronization, 247
    transfer, 247
    visual inspection, 246
Voltage distortion, definition of, 13
Voltage disturbances. *See* Disturbances
Voltage imbalance, 239
Voltage regulation, definition of, 13
Voltage regulators, 215
    buck boost, 217
    constant voltage transformer, 218
    ferroresonant, 218
    tap changers, 216
Voltage surges and interference
    above-ground conductors, interaction, 77
    additive, 63
    buried cables, interaction, 76
    coupling mechanisms, 71
    environmentally induced, 67
    lightning-induced, 67
    potential impact of EMI, 77
    sources/characteristics, 63
    switching surges, 63–66

W

Waveform analyzers, 173
Wave-shape distortion
    linear and nonlinear loads, 81–87
    power factor, 87
    sources and characteristics, 81
Wave-transmission line theory, 102
Wiring and grounding system, 184–188
    continuity of grounds, 188
    EGC impedance, 186
    grounding electrode resistance, 187
    high-frequency grounding, 188
    multiple earth ground references, 188
    neutral conductor
        impedance, 186
        sizing, 186
    neutral-ground bond, 185
    overloads, 202
    performance, 188
    safety considerations, 185
    separately derived systems, 189
    transformer sizing, 186
    verification procedures, 189–195
        one-line diagram, 194
        visual media, 194
Words avoided, 13–14

Copyright © 2006 IEEE. All rights reserved.